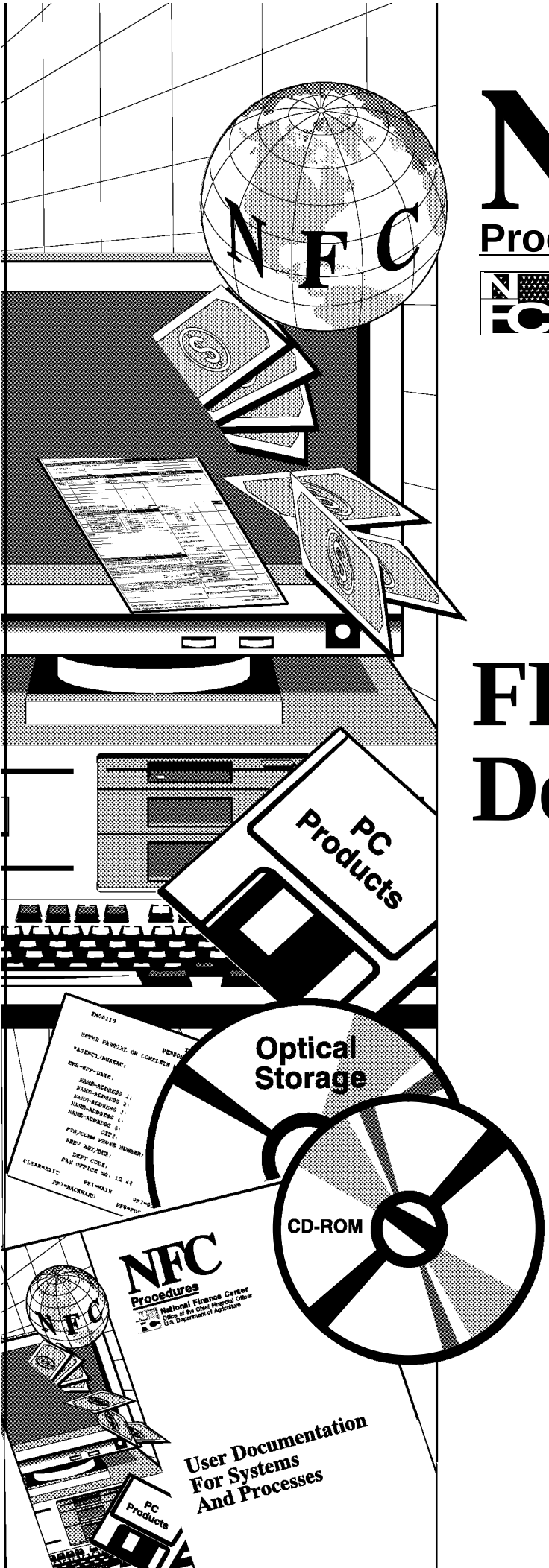

NFC
Procedures

National Finance Center
Office of the Chief Financial Officer
U.S. Department of Agriculture

May 2001

FFIS For Rural Development

TITLE IX
FFIS Manual

CHAPTER 4
Rural Development

About The Procedure xi

Part 1. Introduction To FFIS 1:1

Overview 1:3
FFIS Functions 1:3
FFIS Documents 1:4
FFIS Tables 1:4
Accounting Classification Code Structure (ACCS) 1:5
Interface Overview 1:8

FFIS Security 1:10
Security Layers 1:10
Security Profiles And Security Groups 1:10
FFIS Security Tables 1:11
Approvals Processing 1:11
Controlling Access To FFIS 1:11
FFIS Help Function 1:11

Part 2. System Operations 2:1

Accessing The System 2:3
Security And Remote Terminal Usage 2:3
Sign-On 2:3
Sign-Off 2:8

Using Documents 2:9
Document Format 2:9
Document ID (DocID) 2:10
Document Commands 2:11
Status Codes 2:12
Navigating In Documents 2:13
Processing In Documents 2:13

Using Tables 2:16
Table Format 2:16
Table Action Codes 2:16
Navigating In Tables 2:17
Processing In Tables 2:17

Keyboard Functions 2:19

System Edits 2:20

Using The Document Suspense File 2:22
Document Suspense Index 1 (SUSF) 2:23
Document Suspense Index 2 (SUS2) 2:29

Part 3. Budget And Funds Control 3:1

Budget And Funds Control Overview 3:3

Funds Distribution And Spending Controls . . . 3:3
Budget Structure . . . 3:3
Fund Categories . . . 3:4
Budget Responsibilities . . . 3:4
Budgetary Authority . . . 3:4

Budget And Funds Control Documents . . . 3:7
Appropriation And Apportionment (AA) . . . 3:8
Apportionment Approval Document (PA) . . . 3:11
Budget Execution Document (Allocation) (BE) . . . 3:13
Budget Execution Document (Allotment) (BL) . . . 3:16
Suballotment Document (SA) . . . 3:19

Part 4. Spending . . . 4:1

Spending Overview . . . 4:3
Steps in the Spending Chain . . . 4:3
Referencing Related Documents In A Spending Chain . . . 4:5
Tolerance Limit Check . . . 4:5
Data Entered On Purchasing Documents . . . 4:5
Automated Disbursement Process . . . 4:5
Prompt Pay Determination . . . 4:6
Scheduling Payment Terms . . . 4:6
Payment Voucher Text . . . 4:7
Additional Accounts Payable Topics . . . 4:7
Completing The Spending Cycle . . . 4:7
Integrated Functionality . . . 4:7

Spending Documents . . . 4:9
Integrated Documents . . . 4:9
Interfaced Documents . . . 4:9
Requisition Document (RQ) . . . 4:11
Miscellaneous Order Document (MO) . . . 4:15
Direct Disbursement Document (DD) . . . 4:20
Payment Voucher Document (PV) . . . 4:24
Standard Voucher Clone Document (CM) . . . 4:30
Training Order Document (TG) . . . 4:34
FEDSTRIP Miscellaneous Order Document (FO) . . . 4:38
FEDSTRIP Payment Voucher Document (FV) . . . 4:40
FEDSTRIP OPAC Direct Disbursement Document (OD) . . . 4:43
FEDSTRIP Standard Voucher Document (SF) . . . 4:46
FTSP Direct Disbursement Document (DF) . . . 4:48
FTSP Accrual/Suspense Document (VF) . . . 4:50
MPOL No-Check Disbursement Document (DM) . . . 4:52
MPOL Suspense Document (VM) . . . 4:55
PRCH Miscellaneous Order Documents (GA, GC, GD) . . . 4:57
PRCH Type 40 Receiver Document (EA) . . . 4:60
PRCH OPAC Payable Documents (KA, KD) . . . 4:62

PRCH Standard Voucher Document (SP) 4:65
PRCH Payment Voucher Documents (VA, VC, VD, VE) 4:67
TRAN Transportation Invoice Document (T1) 4:70
TRAN Travel Related Payment Voucher Document (T2) 4:72
GVTS Payment Voucher Document (G1) 4:74
GVTS Transportation Invoice Document (G2) 4:76
GVTS Standard Voucher Document (G3) 4:79
TRVL Obligation Document (XO) 4:81
TRVL Travel Advance Document (XA) 4:83
TRVL Travel Voucher Document (Expenses) (XT) 4:85
TRVL Third Party Payment Voucher Document (XP) 4:88
TRVL Travel Voucher Document (Relocations) (XV) 4:90
UTVN Accrual Document (SU) 4:93
UTVN Payment Voucher Document (UV) 4:95
TELE Standard Voucher Document (SE) 4:97
TELE Payment Voucher Document (VT) 4:99
PCMS Payment Voucher Document (V2) 4:101
PCMS Standard Voucher Document (V5) 4:103
PCMS Payment Voucher Document (V8) 4:105
PCMS Standard Voucher Document (V6) 4:107

Part 5. Accounts Receivable 5:1

Accounts Receivable Overview 5:3
Accounts Receivable Chains 5:3
Establishing Receivable 5:3
Document Referencing 5:4
System Checks 5:4

Accounts Receivable Documents 5:7
ABCO Billing Document (A1) 5:8
ABCO Cash Receipt Documents (A2, A3, and WR) 5:11

Part 6. General Ledger 6:1

General Ledger Overview 6:3
FFIS General Ledger Posting Rules 6:3
Custom Transaction Code 6:5
Self-Reversing Vouchers 6:5
Recurring Journal Voucher 6:5

General Ledger Documents 6:6
Standard Voucher Document (SV) 6:7
Journal Voucher Document (JV) 6:11

Part 7. Reporting 7:1

Part 8. FFIS Tables 8:1

FFIS Tables Overview 8:7

Data Entry And Reference Tables **8:15**
Account Type Reference Table (ACCT) 8:17
Accounting Entries Definition Reference Table (ACED) 8:18
Accounting Entries Reference Table (ACEN) 8:20
Accounting Event Type Reference Table (ACEV) 8:22
Accounting Structure Code Cross-Reference Table (ACXT) 8:24
Automatic Document Numbering Table (ADNT) 8:26
Agency Reference Table (AGCY) 8:27
Accounting Period Cutoff Reference Table (APCT) 8:29
Debt Appeal Reference Table (APPL) 8:30
Accounting Period Reference Table (APRD) 8:32
Account Referral Destination Reference Table (ARDT) 8:34
Accounts Receivable Referral Parameter Table (AREP) 8:35
Accounts Receivable Control Options Reference Table (AROP) 8:36
Accounting Structure Code Reverse Cross-Reference Table (ARXT) 8:40
Accounting Structure Code Options Reference Table (AVOT) 8:42
Budget Object Code Reference Table (BOCT) 8:43
Calendar Date Reference Table (CLDT) 8:45
Text Clause Reference Table (CLTX) 8:46
FFIS Communication Response Table (COMR) 8:47
FFIS Communication Table (COMT) 8:49
Dates Table (DATE) 8:51
Document Tracking Data Entry Table (DCTE) 8:53
Treasury Disbursing Office Reference Table (DISB) 8:55
Discount Lost Reason Code Reference Table (DLRC) 8:57
Disbursing Options Reference Table (DOPT) 8:58
Default Payment Text Reference Table (DPTX) 8:61
Default Values Reference Table (DVAL) 8:62
Default Values Options Reference Table (DVOT) 8:65
Division Reference Table (DVSN) 8:68
Fund Category Reference Table (FCAT) 8:70
Fund Class Reference Table (FCLS) 8:71
Fund Group Reference Table (FGRP) 8:72
Fund Summary Group Definition Table (FSUM) 8:73
Fund Treasury Symbol Reference Table (FSYM) 8:74
Fiscal Year Reference Table (FSYR) 8:76
File Transmission Verification Table (FTVT) 8:78
Fund Type Reference Table (FTYP) 8:79
Fund Reference Table (FUND) 8:80
Fund Options Reference Table (FUN2) 8:83
General Ledger Class Reference Table (GCLS) 8:86
General Ledger Group Reference Table (GGRP) 8:87
Generic Interface Document Cross-Reference Table (GIDT) 8:88
General Ledger Account Reference Table (GLAC) 8:90
Effective Transaction Type Definition Reference Table (GLTT) 8:92

General Ledger Interactive Description System Code Crosswalk Table (GLXT) 8:94
General Reporting Category Reference Table (GRPT) 8:96
Guest Treasury Symbol Reference Table (GTSM) 8:97
Interest Reason Code Reference Table (IRCT) 8:98
Limits Reference Table (LIMT) 8:99
Limit Dimensions Reference Table (LMDT) 8:101
Outstanding Billing Documents Reference Table (OBDT) 8:103
Federal Object Class (Object Category) Reference Table (OCAT) 8:105
Object Class Reference Table (OCLS) 8:106
On Demand Requisition Print Data Entry Table (ODRQ) 8:107
Object Group Reference Table (OGRP) 8:109
Organization Reference Table (ORGN) 8:110
Object Type Reference Table (OTYP) 8:112
Program Reference Table (PGMT) 8:113
Prompt Pay Reference Table (PPAY) 8:114
Prompt Pay Detail Table (PPDT) 8:116
Prompt Pay Summary Table (PPST) 8:118
Prompt Pay Summary Table – Screen 2 (PPS2) 8:120
Prompt Pay Summary Table – Screen 3 (PPS3) 8:122
PRCH To FFIS Vendor Cross Reference Table (PRXT) 8:124
Revenue Category Reference Table (RCAT) 8:126
Revenue Class Reference Table (RCLS) 8:127
Recurring Journal Voucher And Standard Voucher Data Entry Table (REJV) 8:128
Recurring Payment Voucher Data Entry Table (REPV) 8:132
Report Literal Reference Table (RLIT) 8:135
Reporting Category Reference Table (RPTG) 8:136
Revenue Source Reference Table (RSRC) 8:137
Requisition Text Data Entry Table (RXTX) 8:139
Schedule Number Data Entry Table (SCHD) 8:140
Standard General Ledger Account Reference Table (SGLT) 8:141
Subsidiary Journal Definition Reference Table (SJDF) 8:142
System Control Options Reference Table (SOPT) 8:144
Source Data Reference Table (SRCE) 8:147
State Code Reference Table (STCT) 8:148
Tax Code Reference Table (TAXT) 8:149
Transaction Category Reference Table (TCAT) 8:151
Travel Description Reference Table (TDES) 8:154
Travel Default Values Table (TDFT) 8:156
Travel Expense Type Match Reference Table (TETM) 8:158
Travel Mode Reference Table (TMOD) 8:159
To/From Code Reference Table (TOFM) 8:161
PRCH Third Party Assignment Table (TPAT) 8:162
Travel Purpose Reference Table (TPRP) 8:164
Treasury Schedule Control Header Table (TSCH) 8:166
Treasury Schedule Control Rejection Reference Table (TSCR) 8:168

Travel Special Options Reference Table (TSPC) . . . 8:170
Treasury Fund Reference Table (TSYF) . . . 8:172
Treasury Symbol Reference Table (TSYM) . . . 8:174
Travel Type Reference Table (TTYP) . . . 8:176
Text Type Reference Table (TXTP) . . . 8:178
Type Of Overpayment Reference Table (TYOP) . . . 8:179
Voucher Tracking Data Entry Table (VCTE) . . . 8:180
Feeder To FFIS Vendor Cross Reference Table (VCXT) . . . 8:182
Vendor Reference Table (VEND) . . . 8:183
Voided Checks Reference Table (VOID) . . . 8:189
Vendor Reporting Reference Table (VRPT) . . . 8:190
Voucher Text Data Entry Table (VTXT) . . . 8:192
Vendor Type Reference Table (VTYP) . . . 8:193
Write-Off Reason Code Reference Table (WORC) . . . 8:195
Write-Off Reference Table (WROT) . . . 8:196
Withholding Tax Allowance Reference Table (WTAT) . . . 8:198
Year End Account Reference Table (YACT) . . . 8:199
Year End Control Options Reference Table (YOPT) . . . 8:201

Inquiry Tables . . . 8:204

Accountable Document Inquiry Table (ACTI) . . . 8:206
Allotment Inquiry Table (ALLT) . . . 8:208
Allocation Inquiry Table (ALOC) . . . 8:211
Allotment Status Inquiry Table (ALST) . . . 8:214
Appropriation/Public Law Inquiry Table (APLT) . . . 8:216
Apportionment Inquiry Table (APOR) . . . 8:217
Appropriation Inquiry Table (APPR) . . . 8:219
Accounts Receivable Case History Line Inquiry Table (ARCL) . . . 8:222
Accounts Receivable Referral Inquiry Table (AREF) . . . 8:224
Receivable Header Inquiry Table (ARHT) . . . 8:226
Receivable Line Inquiry Table (ARLT) . . . 8:229
Check Block Inquiry Table (CBLK) . . . 8:231
Check Header Inquiry Table (CHKH) . . . 8:232
Check Detail Inquiry Table (CHKL) . . . 8:234
Cash Receipt Header Inquiry Table (CRHT) . . . 8:235
Cash Receipts Line Inquiry Table (CRLT) . . . 8:237
Check Summary Inquiry Table (CSUM) . . . 8:239
Check/EFT Cancellation Inquiry Table (CXLT) . . . 8:240
Document Tracking Inquiry Table (DCTI) . . . 8:242
Document Cross Reference Inquiry Table (DXRF) . . . 8:244
EFT Header Inquiry Table (EFTH) . . . 8:246
EFT Detail Inquiry Table (EFTL) . . . 8:248
Replace EFT Inquiry Table (ERPL) . . . 8:250
Error Guide Inquiry Table (ERRG) . . . 8:252
Fiscal Year Allocation Inquiry Table (FALC) . . . 8:253
Fiscal Year Allotment Inquiry Table (FALT) . . . 8:254

Fiscal Year Appropriation Inquiry Table (FAPP) 8:255
Fiscal Year Apportionment Inquiry Table (FAPR) 8:258
Fund Summary Group Appropriation Table (FSAP) 8:260
Fund Summary Group Available Balance Table (FSAV) 8:263
Fund Summary Group General Ledger Balance Inquiry Table (FSGL) 8:264
General Ledger Balance Inquiry Table (GLBL) 8:265
General Ledger Detail Balance Inquiry Table (GLDB) 8:267
Generic Schedule Control Header Inquiry Table (GSCH) 8:269
Generic Schedule Control Line Inquiry Table (GSCL) 8:270
Invoice – Payment Voucher – Check/EFT Cross-Ref Inquiry Table (IVCH) 8:272
Internal Voucher Inquiry Table (IVLT) 8:274
Journal Voucher And Standard Journal Inquiry Table (JVLT) 8:276
Monthly Summary General Ledger Balance Inquiry Table (MSGL) 8:278
Orders Header Inquiry Table (OBLH) 8:280
Purchase Order Accounting Line Inquiry Table (OBLL) 8:283
Object Revenue Class Inquiry Table (OBRV) 8:285
OTRS-FFIS Interface Document Inquiry Table (OIDT) 8:286
Pending Appropriation Inquiry Table (PAPP) 8:287
Voucher Holdback Inquiry Table (PVCH) 8:288
Voucher Header Inquiry Table (PVHT) 8:290
Voucher Line Inquiry Table (PVLT) 8:293
Receiver Header Inquiry Table (RCHT) 8:295
Receiver Accounting Line Inquiry Table (RCLA) 8:297
Checks Awaiting Replacement Inquiry Table (REPL) 8:299
Requisition Header Inquiry Table (REQH) 8:300
Requisition Accounting Line Inquiry Table (REQL) 8:302
Reprogramming Header Inquiry Table (RPGH) 8:304
Reprogramming Line Inquiry Table (RPGL) 8:306
Requisition Status Inquiry Table (RQST) 8:308
Self-Reversing Journal Voucher Inquiry Table (RVJV) 8:309
Suballotment Forward Reference Inquiry Table (SAFR) 8:310
Suballotment Inquiry Table (SAIN) 8:311
Suballotment Options Inquiry Table (SAOP) 8:313
Suballotment Spending Control Inquiry Table (SASP) 8:315
Suballotment Structure Inquiry Table (SAST) 8:318
Spending Control Document Summary Screen Table (SPDT) 8:319
Travel Advance Inquiry Table (TADV) 8:320
Travel Advance Header Inquiry Table (TAHT) 8:322
Travel Advance Line Inquiry Table (TALT) 8:324
Travel Interface Document Inquiry Table (TIDT) 8:326
TIN Number Cross Reference Inquiry Table (TINT) 8:328
Transportation Invoice Header Inquiry Table (TNHT) 8:329
Transportation Invoice Line Inquiry Table (TNLT) 8:331
Travel Order Header Inquiry Table (TOHT) 8:333
Travel Order Line Inquiry Table (TOLT) 8:335

Treasury Offset Entry Table (TOPT) 8:337
Allocation Totals Inquiry Table (TOTL) 8:338
Travel-Related Voucher Line Inquiry Table (TPLT) 8:339
Training Order Header Inquiry Table (TROH) 8:340
Treasury Schedule Control Line Inquiry Table (TSCL) 8:343
Travel Voucher Accounting Line Inquiry Table (TVAT) 8:345
Travel Voucher Header Inquiry Table (TVHT) 8:347
Payment Voucher Line – Check Number Cross-Reference Inquiry Table (VCHK) 8:349
Voucher Tracking Inquiry Table (VCTI) 8:350
Vendor Name Inquiry Table (VNAM) 8:352
Vendor Prior Calendar Year Disbursement Amount Inquiry Table (VPYA) 8:353
Payment Voucher Line – Disb Document Cross Reference Inquiry Table (VXDD) 8:354
Vendor Document Cross Reference Inquiry Table (VXRF) 8:356

Part 9. Appendixes 9:1
Glossary A:1
Alphabetical Integrated Document List B:1
Functional Integrated Document List C:1
Alphabetical Interfaced Document List D:1
Functional Interfaced Document List E:1
Tables List F:1
Key Fields On The GIDT For Various Interfaces G:1
Rural Development FFIS Processing Matrix For Budget H:1
Rural Development FFIS Processing Matrix For Spending I:1
Rural Development FFIS Processing Matrix For Accounts Receivable J:1
Feeder System Purposes K:1
Summary of Feeder Transactions Listing L:1
Feeder System Procedural Reference M:1
Feeder System Input Forms N:1
OPAC Agency Requirements O:1

Part 10. Customer Assistance 10:1
Customer Assistance Overview 10:3
Remedy 10:3
Knowledge Base 10:4
Submit A Support Ticket For Assistance or Request Information 10:4

Part 11. Quick Reference Guides 11:1
Overview 11:3
System Operations (SOP) SOP:1
Appropriation And Apportionment Document (AA) AA:1
Budget Execution Document (Allocation) (BE) BE:1
Budget Execution Document (Allotment) (BL) BL:1
Standard Voucher Clone Document (CM) CM:1

Direct Disbursement Document (DD) DD:1
Journal Voucher Document (JV) JV:1
Miscellaneous Order Document (MO) MO:1
Apportionment Approval Document (PA) PA:1
Payment Voucher Document (PV) PV:1
Requisition Document (RQ) RQ:1
Suballotment Document (SA) SA:1
Standard Voucher Document (SV) SV:1
Training Order Document (TG) TG:1

About The Procedure

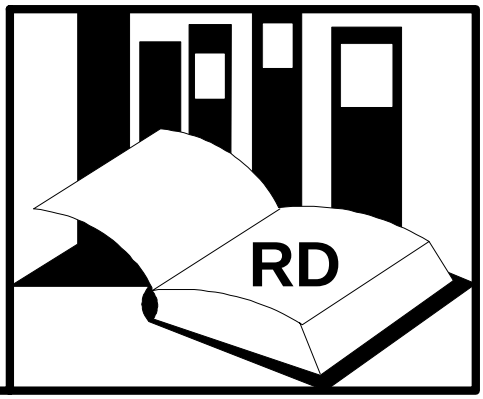

This procedure provides instructions for personnel in the Rural Development (RD) to access and operate the U.S. Department of Agriculture's Foundation Financial Information System (FFIS). The following information will help you use the procedure more effectively and locate further assistance if needed.

How The Procedure Is Organized

The procedure is organized in parts by function (e.g., **Part 3, Budget And Funds Control**). Each part contains an overview and data entry/inquiry instructions under separate headings for the documents used for that function. The table instructions used in the functions are in **Part 8, FFIS Tables**.

Pages are numbered consecutively within **Parts 1** through **11** and are prefixed with the part number (e.g., the first page of **Part 3, Budget And Funds Control**, is identified as **3:1)**.

Appendixes contain the glossary, which defines terms used throughout the procedure, and other reference information. Pages are numbered consecutively within each appendix and are prefixed with the appendix letter (e.g., the first page of **Part 9, Glossary (Appendix A)** is identified as **A:1**).

The **Quick Reference Guides** (QRGs) provide abbreviated instructions for accessing FFIS and entering documents. The guides are the last part of the procedure and may be removed for easy reference. The guides are organized alphabetically by document transaction code. Within each guide, pages are numbered consecutively at the bottom (e.g., the first page of Apportionment Approval Document (PA) is identified as **PA:1**).

What Conventions Are Used

The procedure uses the following conventions:

- Field specifications contain field type and size printed in italics.

  Examples:

  Fund (*required, alphanumeric field; max. of 3 positions*).
  Commnd (*conditional, alpha field; 3 positions*).

Below are definitions of field types. These terms are also defined in the glossary.

Required = You **must** enter data in the field.

Conditional = You **may be required** to enter data, based on criteria indicated in the field instructions.

Optional = You **may elect** to enter data in the field. If left blank, no data is system generated.

Optional default = You **may elect** to enter data. If the field is left blank, the system generates a default entry.

No Entry = You **do not** enter data in the field. The field instruction states the reason for no entry.

- Preceding the data field instructions, the document actions are abbreviated and printed in **bold** face **Caps** and are used as follows:

  Examples:

  ADD: used for adding a document.
  MOD: used for modifying a document.
  CHG: used for changing a document.
  APV: used for approving a document.
  REJ: used for rejecting a document.

- System-generated data or data that you must key in exactly as shown is printed in ***bold italics***.

  Example:

  Key in ***Get***.

- Entries are not upper or lower case sensitive unless otherwise stated. In the example below, you can key in either ***N*** or ***n***.

  Example:

  Key in ***N*** at the Action field.

- Date fields use the *mmddyy* format, unless otherwise stated.

  Example:

  March 01, 2001, is keyed in as ***030101***.

- Figure references link the figures with the text.

  Example:

  The AA screen (**Figure 3:5**) is displayed.

- A 4-character acronym is used to refer to a table. For a complete table list, see **Part 9, Appendix F**.

  Example:

  See the FUND for valid fund codes.

- A 2-character acronym is used to refer to a document. For a complete integrated document list, see **Part 9, Appendix B** and/or **Appendix C**. For a complete interfaced document list, see **Part 9, Appendix D** and/or **Appendix E**.

  Example:

  The AA screen (**Figure 3:5**) is displayed.

- Keyboard references are printed in brackets.

  Example:

  Press [Enter].

- Important extra information is identified as a note.

  Example:

  Note: To override an error message, key in ***O*** in the Command field and press [Enter].

- Key fields are identified by 🔑 next to the field name.

  Example:

  BFYs 🔑 *(required, numeric field; 2 positions)*. Key in the budget fiscal years.

Who To Contact For Help

For questions about FFIS user identification numbers, passwords, and access capabilities, see **Part 1, FFIS Security**.

For questions about using FFIS, see **Part 1, FFIS Help Function**.

For questions about the distribution of this procedure, contact the Directives and Analysis Branch at **504–255–5322**.

PART 1.

INTRODUCTION TO FFIS

Overview **1:3**
FFIS Functions 1:3
FFIS Documents 1:4
FFIS Tables 1:4
Accounting Classification Code Structure (ACCS) 1:5
Interface Overview 1:8

FFIS Security **1:10**
Security Layers 1:10
Security Profiles And Security Groups 1:10
FFIS Security Tables 1:11
Approvals Processing 1:11
Controlling Access To FFIS 1:11
FFIS Help Function 1:11

Overview

The Foundation Financial Information System (FFIS) is a fully integrated financial package that is designed to meet stringent budget and funds control needs, as well as complex multi-fund accounting and reporting needs. **Figure 1:1** illustrates the configuration of FFIS components.

FFIS integrates a wide range of accounting-related **functions** to support a comprehensive financial system. In performing these functions, users access a series of document entry screens and related table screens. **Documents** are the means by which financial transactions are recorded in the system. **Tables** are sequential lists of either reference codes or processed document data. **Journals** represent the official accounting activity and are used as input for reporting purposes. Journals are updated as each document is processed. **Reports** are generated based on information located in tables and/or journals. **Note:** These and other FFIS-specific terms are defined in **Part 9, Appendix A, Glossary**. FFIS functions, documents, and tables are discussed in more detail in this section.

FFIS Functions

Following is a brief description of each FFIS function. For more information, see the part of the procedure shown next to the function name.

Budget and Funds Control (Part 3). Used to establish budget structures based on the agency's budget distribution requirements, record all financial activities, monitor availability of funds online to prohibit over-obligating, overspending, reprogram resources to reflect changes in the financial plan during the fiscal year, and avoid anti-deficiency by allowing spending controls to be set.

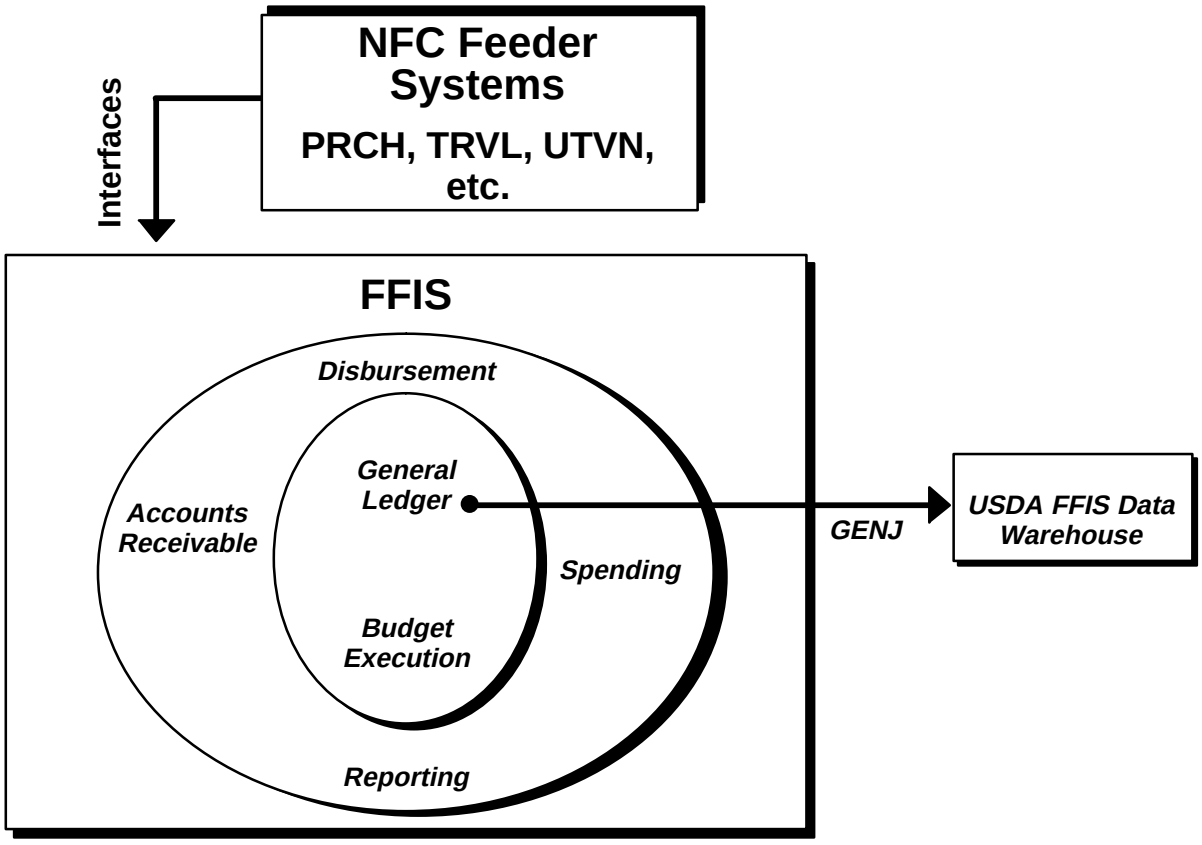

Figure 1:1. FFIS Financial Components

Spending (Part 4). Used to combine the purchasing and accounts payable transactions to record, monitor, and control all activities in the procurement and acquisition of goods and/or services. Agencies may record commitments, obligations, receipts, and payments for all types of Federal procurements, e.g., purchase orders, contracts, miscellaneous purchases, print orders, etc. Each spending amount may be validated against the available funds within the agency's established budget, thereby, affording the user immediate online access to the actual accounting and budgetary impact of the spending transaction.

The Accounts Payable function is used to authorize and record payments for goods and services. The types of expenditures that can be recorded include payments to vendors, payments from one agency to another, and internal payments to another part of your agency. In addition, the Accounts Payable function supports Prompt Payment Act requirements.

The Automated Disbursements function records, monitors, and controls the activities associated with the disbursement of funds.

Accounts Receivable (Part 5). RD Accounts Receivable transactions are processed by NFC's staff which supports RD's Accounts Receivable needs. The Administrative Billings and Collections System (ABCO) establishes receivables, generates billing statements, manages aging activities, accrues interest and penalty charges, assesses administrative fees and processes collections. The ABCO interface to FFIS creates the Accounts Receivable documents which update the available budget amount and post to the General Ledger based on client-defined options.

General Ledger (Part 6). Used to store all FFIS budget and financial transactions and maintain an accounting audit trail. A common posting process is established to automatically post transactions to the General Ledger and journals. Reports produced through the General Ledger are in compliance with the U.S. Standard General Ledger (SGL).

Reporting (**Part 7**). Presents the format, describes the content of, and provides access procedures for the Enterprise Information Distribution System (EIDS) baseline FFIS reports and canned USDA FFIS Financial Data Warehouse (FDW) reports.

Tables (**Part 8**). There are three types of tables in FFIS: Reference, Data Entry, and Inquiry. The Reference tables are used by document processors to define valid codes and system processing options. Most of these tables are identified by the word "Reference" in the title. The Data Entry tables are used for transaction processing that does not require a document. The Inquiry tables are maintained by the system. They are updated by accepted documents or offline processes and store the results.

Appendixes (**Part 9**). Contain the glossary, which defines terms used throughout the procedure, and other reference information. Pages are numbered consecutively within each appendix.

Customer Assistance (**Part 10**). Provides instructions on acquiring assistance on FFIS processing functions.

Quick Reference Guides (**Part 11**). Provide abbreviated instructions for accessing FFIS and using RD documents.

FFIS Documents

FFIS documents are entry screens used to process the agency's financial transactions. Each transaction (e.g., requisition, miscellaneous order, payment voucher) is processed using a specific type of document. Each type of document is identified by a 2-character abbreviation code called a transaction code (e.g., RQ=Requisition Document, MO=Miscellaneous Order Document, PV=Payment Voucher Document).

Most documents consist of a header screen and one or more line screens. Document headers contain general information pertaining to the entire transaction (e.g., vendor code, transaction date, document total). Document lines contain detailed accounting information (e.g., budget object code, program code, line amount). Up to 999 different accounting lines may be recorded on a single FFIS transaction.

After document data is processed, it is recorded permanently in FFIS tables (discussed below).

For a complete list of FFIS integrated documents used by RD, see **Appendix B, Alphabetical Integrated Document List**, or **Appendix C, Functional Integrated Document List**. For a complete list of FFIS interfaced documents used by RD, see **Appendix D, Alphabetical Interfaced Document List**, or **Appendix E, Functional Interfaced Document List**. For general instructions on using documents, see **Part 2, Using Documents**. For detailed instructions on using specific documents, see the respective parts in this procedure (e.g., the AA is located in **Part 3**, **Budget And Funds Control**).

FFIS Tables

FFIS tables are lists of sequential data that are sorted in ascending order on a specific index or by key fields. Tables are used to store and retrieve reference codes and document transaction records. Each table is identified by a unique 4-character acronym, called the table ID, which is determined by FFIS. The three basic types of FFIS tables (inquiry, reference, and data entry) are described below.

Inquiry. Used for inquiry purposes and are automatically updated as documents are processed. When a document is accepted, the system creates records in the corresponding header and line inquiry tables. The division of records between header tables and line tables reflects the header/line relationship in the document. Header tables contain the information entered on the header screen of a document. Line tables contain the individual accounting distributions and amounts associated with each line of the document. Accordingly, header tables store general, summary-level data about documents, while line tables store the details of each accounting distribution associated with the document (e.g., Orders Header Inquiry Table (OBLH), Purchase Order Accounting Line Inquiry Table (OBLL)).

Reference. Used to define the agency's valid codes and system processing options in FFIS. FFIS uses these codes and values for edit and control purposes. Most reference tables are loaded by the Functional Administrator, usually at implementation or before the start of a new fiscal year.

Reference tables are categorized by level of control. Each category is briefly described below:

- Common tables contain values that are used by all agencies. These values are set at the department level, maintained by NFC's FFIS Operations Branch, and are consistent and applicable for each agency (e.g., Accounting Entries Definition Reference Table (ACED)).

- Agency-specific tables contain values that meet the specific requirements of an individual agency. The values for agency-specific tables are set and maintained at the agency level and may differ from agency to agency (e.g., Budget Object Code Reference Table (BOCT)).

- Combination tables reside in the agency application, but one or more elements in the table are set by the department (e.g., Vendor Reference Table (VEND)) and maintained by NFC's FFIS Operations Branch.

Data Entry. Used to record recurring financial transactions. The data entered does not have any accounting impact at the time of entry (e.g., CM used for recurring commitment).

When information is added to data entry tables, it does not directly update the journals. Instead, the system uses this data to build documents at a date specified by the user to create accounting transactions. These tables contain information to create documents in an offline process. Use of these tables is optional, unlike the inquiry or reference tables.

For general instructions on using tables, see**Part 2, Using Tables**. For detailed instructions on using specific tables, see **Part 8, FFIS Tables**.

Accounting Classification Code Structure (ACCS)

The ACCS, stored in the Program Code in FFIS, provides the framework for establishing budget structures, collecting and distributing costs, and producing agency and Departmentwide reports. FFIS uses standard codes to represent accounting information on all tables, documents, and reports. **Figure 1:2** – **Figure 1:5** show the breakdown on the 9-digit ACCS code and a crosswalk from the old to the new ACCS code for both Headquarters allottees and State Offices.

Digit(s)	Description
1	Last digit of the budget fiscal year
2	Fund Code
3–7	Organization
8–9	Reporting Category

Figure 1:2. 9-Digit ACCS for Headquarters Allottees

Old Digit(s)	Old Description	New Digit(s)	New Description
1	Last digit of the fiscal year	1	Last digit of the budget fiscal year
2–3	Appropriation	2	Fund Code
4	Allottee	N/A	
5–6	Major Class	N/A	
7–9	Special Purpose	8–9	Reporting Category
10	Sub Unit	N/A	
11–15	Organization	3–7	Organization

Figure 1:3. Crosswalk of Old ACCS to New ACCS for Headquarters Allottees

Digit(s)	Description
1	Last digit of the budget fiscal year
2	Fund Code
3–4	Location/State
5–7	Location/Field Office
8–9	Reporting Category

Figure 1:4. 9-Digit ACCS for State Offices

Old Digit(s)	Old Description	New Digit(s)	New Description
1	Last digit of the fiscal year	1	Last digit of the budget fiscal year
2–3	Appropriation	2	Fund Code
4	Allottee	N/A	
5–6	Major Class	N/A	
7–9	Special Purpose	8–9	Reporting Category
10	Sub Unit	N/A	
11–12	State	3–4	Location/ State
13–15	County	5–7	Location/ Field Office

Figure 1:5. Crosswalk of Old ACCS to New ACCS for State Offices

FFIS uses standard codes to represent accounting information on all tables, documents, and reports. This section addresses the accounting codes that are used in FFIS and explains how these codes meet RD ACCS requirements.

The following tables are affected by the ACCS:

- Fund Reference Table (FUND)
- Division Reference Table (DVSN)
- Organization Reference Table (ORGN)
- Program Reference Table (PGMT)
- Reporting Category Reference Table (RPTG)
- Accounting Structure Code Cross-Reference Table (ACXT)

The Budgetary/Spending ACCS Components chart (**Figure 1:6**) lists the common accounting code elements used throughout FFIS. The chart indicates the length of the field and identifies the FFIS reference table that holds the valid values and screen literals for each code. A more detailed explanation of each code is provided following **Figure 1:6** and **Figure 1:7**.

RD Terminology	FFIS Terminology	Rural Development Field Length	Associated FFIS Table	Screen Literal
Accounting Code	Program Code	9 char	PGMT	Pgm
Fiscal Year	Beginning Budget Fiscal Year (BFY)	2 char	FUND	BFY
Fiscal Year	Ending Budget Fiscal Year (BFY)	2 char	FUND	BFY
Appropriation	Fund Code	2–3 char	FUND	Fund
State Office/Headquarter Allottees	Division	2 char	DVSN	Div
Cost Center/Allottees	Organization	5 char	ORGN	Org
Special Purpose	Reporting Category	2 char	RPTG	Rpt
Object Class	Budget Object Class	4 char	BOCT	BOC

Figure 1:6. Budgetary/Spending ACCS Components

Fund	Fund Code	Description	Fund Type	Treasury Symbol	Life of the Fund
01	1	Rural Housing Service (RHS)	General Fund	12(FY)0403	Single Year
01	P	Payroll for RHS, RBS, and RUS (Headquarters only)	General Fund	12(FY)0403	Single Year
01R	C	Reimbursables for RHS, RBS, and RUS	Reimbursable Fund	12(FY)0403	Single Year
03	3	National Sheep Industry Improvement Center (SHEEP)	General Fund	12X4202	No Year
03R	Q	National Sheep Industry Improvement Center (SHEEP)	Reimbursable Fund	12X4202	No Year
04	4	Rural Business-Cooperative Service (RBS)	General Fund	12(FY)0403	Single Year
08	8	Rural Utilities Service (RUS)	General Fund	12(FY)0403	Single Year

Figure 1:7. RD FFIS Fund Codes

Fiscal Year Coding

The fiscal year is identified in FFIS by the last 2-digits of the year. For example, Fiscal Year 2000 is coded as 00. There are two fields that contain fiscal year designations: Fiscal Year (FY) and Budget Fiscal Years (BFY).

Fiscal Year. The Federal Government's fiscal year runs from October 1 thru September 30. This 2-position data element represents the fiscal year in which an accounting event is recorded. Fiscal Year is often associated with an accounting period that identifies the fiscal month within the year. For example, an accounting transaction in November 2000 takes place in month 2 of FY 2001. This would be coded 01 for the fiscal year and 02 for the accounting period.

Budget Fiscal Years. This 4-position (maximum) data element is used in association with an appropriation, or Fund, and identifies the year(s) of availability of the appropriation. A single-year appropriation is represented by a 2-digit budget fiscal year. For example, a single year appropriation authorized in 2000 is represented as BFY 00 (the last two positions blank). In the case of a multiple-year appropriation, the first two positions represent the beginning BFY and the last two positions represent the ending BFY.

Fund Coding

The fund code is used in FFIS for tracking an entire appropriation or part of an appropriation. Fund codes are stored in the FUND. The fund code is used to identify the source of the appropriation. **Figure 1:7** lists the fund codes currently used by RD, as they are coded on FUND and the type of fund they represent, which is qualified on the Fund Type Reference Table (FTYP).

Agency. Agency is stored in the agency field in the FUND and inferred from the fund code. The agency is defined in the Agency Reference Table (AGCY). The Agency codes for RD are described in **Figure 1:8**.

Agency Code	Agency Name
07	Rural Housing Service
15	Rural Utilities Service
32	Rural Business - Cooperative Service
SC	National Sheep Industry Improvement Center

Figure 1:8. RD FFIS Agency Codes

Organization Code

The organization code identifies the organization level within Divisions. Organization codes are stored in the ORGN.

Division. The Division code consists of a 2-position code. Division codes are stored in the DVSN. RD uses the Division code to identify each RD State Office and Headquarters allottee. **Figure 1:9** provides an example of RD FFIS Division codes.

Unit	FFIS Division Code
State Office (each identified by 2 character state abbreviation, e.g., Missouri = MO)	MO
Operations and Management (O&M)	OM
Office of Community Development (OCD)	OD
Policy and Planning (P&P)	PP
National Sheep Industry Improvement Center	SP
Rural Business-Cooperative Service (RBS)	RB
Rural Housing Service (RHS)	RH
Rural Utilities Service (RUS)	RU

Figure 1:9. RD FFIS Division Codes

Lower Level Division Organizations. In FFIS the organizational levels below the Division are represented by Organization codes stored in the ORGN. RD uses up to 4 organizational levels per Headquarters allottee and 2 organizational levels per state. Some ORG level 1s have been defined as *Rollup* organizations for reporting and inquiry purposes. Spending can be tracked online by organization. The Rural Development Budget Division provides each FFIS Division with coding for their specific organization levels.

Program Code. RD uses the Program Code field to hold the 9-digit ACCS code. The Program Code is used as the key to the Default Values Reference Table (DVAL), which stores the derived accounting elements associated with each ACCS code. **Note:** Effective with FY 2001 administrative activity, you **must** use your 9-digit program (ACCS) code. If you have prior year obligations originally entered through a feeder system using the old 15-digit accounting code, the new 9-digit ACCS can be obtained by accessing ACXT.

Reporting Category. The Reporting Category is an additional element of the ACCS used specifically for tracking costs, but is not used for budgeting purposes. This field is used to store the Special Purpose code. The Special Purpose code is associated with the BFY and the DVSN in RPTG.

Budget Object Class (BOC) Coding

Budget object classes are used for budgeting and spending activities.

The values entered in the Budget Object Class Table (BOCT) are consistent with the USDA standard list of object classes, not including the revenue object classes. FFIS provides the capability to budget or plan by one level of object class (e.g., Budget BOC) and spend at a lower level of object class (e.g., Spending BOC). The National Office Budget Division provides detailed guidance on the relationship between specific budgeting and spending BOC's.

Interface Overview

Transactions can be entered into FFIS by direct entry or through a feeder system. Integrated functions use FFIS to record accounting events directly into the system (e.g., budget and fund controls). Interfaced functions process data through the appropriate feeder systems with the resulting accounting events being recorded in FFIS.

Each feeder system which previously interfaced with the Central Accounting System (CAS) is either integrated into FFIS or interfaced with FFIS. For those feeder systems that are interfaced with FFIS, the users enter data into the feeder system or a feeder system front end. The feeder systems that interface with FFIS produce interface-generated documents that record the financial impact of the feeder system transactions. For these systems, FFIS acts primarily as a data repository providing data for queries, reports, and in some cases, other interfaces.

The Systems Interfacing With FFIS table (**Figure 1:10**) lists the interfaces required by RD to support FFIS. This table indicates the FFIS functions, types of interfaces, and the feeder system sources.

The financial impact of transactions entered directly into the feeder systems are recorded in FFIS, based on the type of transaction that is being processed (e.g., obligation, payment, etc.), on a nightly basis. These are loaded using a utility program, which is a common input file in FFIS, that creates FFIS documents and stores these documents in the Document Suspense File.

Using the Document Suspense File, the system executes an FFIS baseline program that edits the FFIS documents and updates the agency database (inquiry tables and journals). If a document fails to pass system edits, the document remains in the Document Suspense File with a *Rejected* status awaiting corrective action.

To minimize modifications to interfaced feeder systems, tables are used to: 1) validate the accounting stored in the feeder system master records, where applicable; 2) identify how the accounting entered on the document is captured and recorded in FFIS; and 3) crosswalk the feeder system document number or other identifying values of the document to the FFIS generated document.

FFIS Function	Type of Interface	Feeder System
Spending	Departmentwide	ABCO (Administrative Billings and Collections System) CAPS (Correction, Adjustment, and Manual Payments System) DOTS (Document On-line Tracking System) EMIS (Equipment Management Information System) FEDSTRIP (Federal Standard Requisitioning and Issue Procedures System) FTSP (Federal Telecommunications System Payments) GOALS (Government On-line Accounting Link System) GVTS (Government Transportation System) MINC (Miscellaneous Income Reporting System) MPOL (GSA Motorpool System) OTRS (OPAC Tracking Reconciliation System) PACS (Payroll Accounting System) PCMS (Purchase Card Management System) PRCH (Purchase Order System) PROP (Personal Property System) TELE (Telephone Vendors System) TRAN (Transportation System) TRVL (Travel System) UTVN (Utilities Vendors System)

Figure 1:10. Systems Interfacing with FFIS

FFIS Security

All agencies in FFIS must designate a Security Administrator. This administrator has important roles and responsibilities within the security function. For further information about the roles and responsibilities of the Security Administrator as they pertain to the security function, see the Security Access procedure, Title VI, Chapter 1, Section 1.

Users in the field offices who need access to FFIS should contact their Information Resource Manager in the State Office. Headquarters users should contact their supervisor who will forward approved requests to the Security Administrator.

Security Layers

Access to FFIS is secured by three layers of security. Two of these layers, Top Secret and DB/2 Security, are external to FFIS. The third layer, the FFIS Security module, is part of FFIS and is the main security control in FFIS. A brief description of each level is given below.

Top Secret (Level 1). Top Secret security controls users' access to all NFC computer resources, including the Customer Information Control System (CICS) regions, files, and program execution where FFIS resides. Individual users requesting a mainframe user ID, should follow the appropriate instructions provided under **FFIS Security** (above).

DB/2 (Level 2). While Top Secret provides users with access to the CICS regions, DB/2 controls users' access to the individual FFIS application images. DB/2 security, in conjunction with Top Secret, restricts users to their agency's application image. For example, RD users are not able to access other agencies' applications and, conversely, other agency users are not able to access the RD application. RD users should follow the appropriate instructions provided under **FFIS Security** (above) to request access to their application image.

FFIS Security Module (Level 3). The FFIS Security module is used to control user access to FFIS document functions and FFIS table data. The FFIS Security module controls system access by checking system control table entries to validate:

- That the user is authorized to perform the requested action, such as scanning, changing, adding, or deleting a table record.
- That the user is authorized to perform the requested function, such as applying an override to an FFIS document.
- That the user is authorized to access the requested record, such as viewing budget information for other divisions.

The application-specific security uses FFIS security groups, security areas, and model security profiles in conjunction with individual FFIS user IDs to control each user's access. Security groups are groups of documents and/or tables for which identical security is needed (e.g., all budget documents and tables). Security areas are defined by the assignment of SEC1 and SEC2 codes to documents. The model profiles are used to establish the security access for a group of users with similar job functions. For example, Budget Analysts in a state office will be able to allot funds from a state level down to the lowest level of the budget by processing FFIS budget documents (BL and/or SA); whereas Budget Assistants in a state office may only be able to view tables that show the allotment/suballotment amounts for that state. The Security Administrator works with staffs to establish and maintain security groups and model profiles.

Security Profiles And Security Groups

FFIS security employs user IDs and passwords to authorize a user to access FFIS. Each user ID is linked to a security profile, which depending on job responsibility, could give the user access to:

- Process documents for a specific division or view data related to that division.
- Perform specific processing functions, such as data entry, error correction, and online edit and update.
- Process specific types of documents, such as Miscellaneous Obligations (MO).
- Gain viewing access to a table or to an individual entry in a table.

Security profiles are defined in the Security Table (STAB). To enable groups of users with similar job functions to be assigned the same security profile and to facilitate maintenance, FFIS supports the definition of model security profiles. Individual FFIS user IDs are linked with the appropriate model profile. In this manner, if a change must be made to the security privileges for a group of users, only the model profile (to which their user IDs are linked) must be changed. Each model profile has access to a predetermined set of documents and tables based on job function.

To define model security profiles, documents and tables must first be linked to specific security groups. By logically grouping documents and tables that relate to similar functions (e.g., Budget, Spending), access to this group can be defined differently for different model profiles. For example, by including all Budget tables and documents in the same security group, the Budget Officer model profile can be set up with authority to edit, update, and scan everything in this group whereas the NFC model profile can be set up with authority only to scan documents and tables in this group. Security groups also enable reference tables to be grouped

separately so that update access to these tables can be centrally controlled, while at the same time giving scan access to all (or most) users.

After security groups are established and assigned to model security profiles in STAB, users are linked to these profiles.

FFIS Security Tables

FFIS security is table-driven. There are no documents used in the security function.

STAB is the primary system control table used to regulate access to system data. It contains one entry for each user. Each entry is defined by a user ID and password which comprise the key to the table.

STAB is used to define model security profiles. It is also used to link individual user ID's with specific security groups (groups of documents and tables), which are defined in the FORM/FORT/FOR2 tables. The For Whom Table (WHOM) is used to define specific SEC1 and SEC2 areas in which a particular user ID is authorized to work. The SEC1 is the first-level security group to which a user belongs; used to delimit a user's capabilities within the system. The SEC2 is the second-level to which a user belongs; used to further delimit a user's capabilities within the system.

Approvals Processing

Approvals processing includes options that permit both operations-level and management-level control over document processing. These options make it possible to insert an additional level of security into document processing procedures. For example, a data entry clerk may have authority to enter and edit payment documents, an agency official may have authority to approve payment documents, and an NFC user may have authority to process payment documents to update the database. Approval authorities are set in the STAB. The Approval Table (APRV) is used for document approval based on dollar amount thresholds.

Controlling Access To FFIS

For details on agencywide policies and procedures for controlling access to FFIS, see the Security Access procedure, Title VI, Chapter 1, Section 1. The Security Access procedure outlines the following:

- Concept of the security operation.
- Procedures for establishing and defining the roles for FFIS security.
- Procedures for acquiring FFIS access.
- Procedures for changing FFIS access.
- Procedures for requesting deletion of FFIS access.
- Roles and responsibilities (agency management, Functional Administrator, Agency Security Officer, and FFIS users).

Also included are instructions for completing the FFIS Security Access Request Form.

FFIS Help Function

The FFIS Operations Branch (FOB) Customer Service Center (CSC) located at NFC in New Orleans, Louisiana, will provide technical support in responding to all RD user requests for assistance. CSC will be the initial contact point for all requests for assistance in regard to RD related FFIS processing functions. If CSC cannot respond to the request, they will forward the request to an RD or Department FFIS point of contact for resolution.

All questions relative to administrative feeder system processing should be forwarded to existing NFC feeder system help desks. Refer to **Part 9, Appendix M, Feeder System Procedural References**, for the appropriate NFC procedure manuals identifying feeder system contact points. Requests for enhancements or requests for automation are not to be reported through the CSC at this time. A separate procedure is being documented to handle these requests and an appropriate review process.

The preferred method of requesting technical assistance and reporting FFIS problems/issues to the CSC is via the website located at *http://ffis-remedy.hqnet.usda.gov*. A secondary method of problem reporting will be electronic mail addressed to *help@ffis.usda.gov*. The last available method for reporting problems or making inquiries is via the CSC telephone line, which will be open from 7 a.m. to 5 p.m., central time, Monday through Friday, at (504) 255–6911. The Web-based requests and electronic mail submissions will be given priority over telephone-based contact and both of these methods are available 24 hours a day, 7 days a week. See **Part 10**, **Customer Assistance**, for specific instructions on submitting a Customer Service Ticket.

Note: It is highly recommended that all requests for assistance be coordinated through your organization's administrative staff to ensure that the staff is fully aware of problems/issues and resolutions related to FFIS and to minimize/eliminate duplicate requests for assistance.

PART 2.

SYSTEM OPERATIONS

Accessing The System **2:3**
Security And Remote Terminal Usage 2:3
Sign-On 2:3
Sign-Off 2:8
Using Documents **2:9**
Document Format 2:9
Document ID (DocID) 2:10
Document Commands 2:11
Status Codes 2:12
Navigating In Documents 2:13
Processing In Documents 2:13
Using Tables **2:16**
Table Format 2:16
Table Action Codes 2:16
Navigating In Tables 2:17
Processing In Tables 2:17
Keyboard Functions **2:19**
System Edits **2:20**
Using The Document Suspense File **2:22**
Document Suspense Index 1 (SUSF) 2:23
Document Suspense Index 2 (SUS2) 2:29

Accessing The System

This section provides access security information and gives specific sign-on/sign-off instructions.

Security And Remote Terminal Usage

Access security is designed to prevent unauthorized use of systems and databases. For information about access security, including user identification numbers (user IDs), passwords, and access to a specific application, field office users should contact their Information Resource Manager (IRM) and headquarters users should contact their supervisor.

To access FFIS, you must (1) have authorized security clearance and (2) use a personal computer that is connected through your telecommunications network to the mainframe computer located at NFC.

Note: FFIS application-specific security uses security profiles to establish the security access for a group of users with similar job functions (e.g., budget officers). In conjunction with these profiles, individual user IDs control each user's access (e.g., view, update, edit, etc.) to functionality and data within an agency's application image. For more information about application-specific security, see **Part 1, Security Profiles and Security Groups**.

Sign-On

NFC and FFIS have firewalls in place to prevent unauthorized access to the mainframe. As part of the security access process, NFC and FFIS have established different user ID's and passwords to access these systems.

Connect to the ICON that has been created on your desktop for FFIS which is a direct line to NFC (**Figure 2:1**). Put your NFC ID in **capital letters**. Press [Tab] to move to the password field. The password is your agency code and your ZIP code (e.g., 0799999).

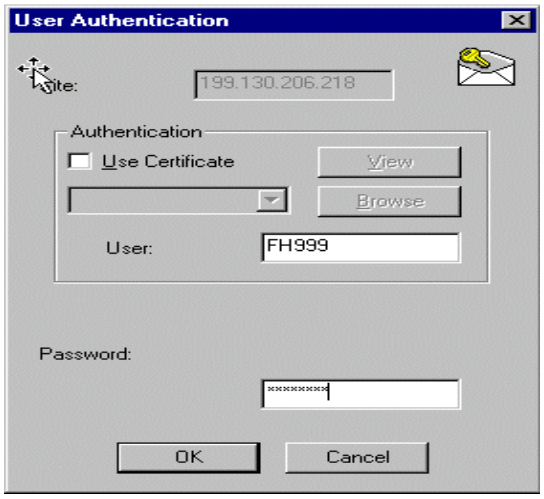

Figure 2:1.User Authentication sign-on screen

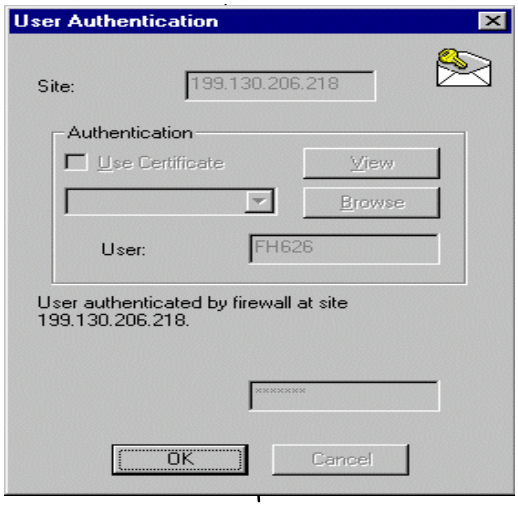

Figure 2:2.User Authentication Firewall screen

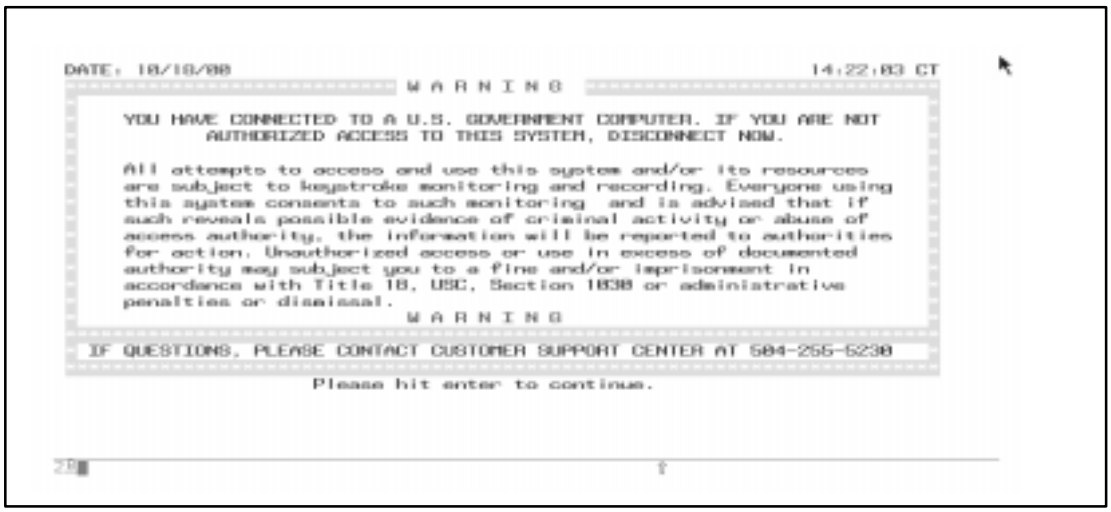

Figure 2:3. U.S. Government Computer Warning screen

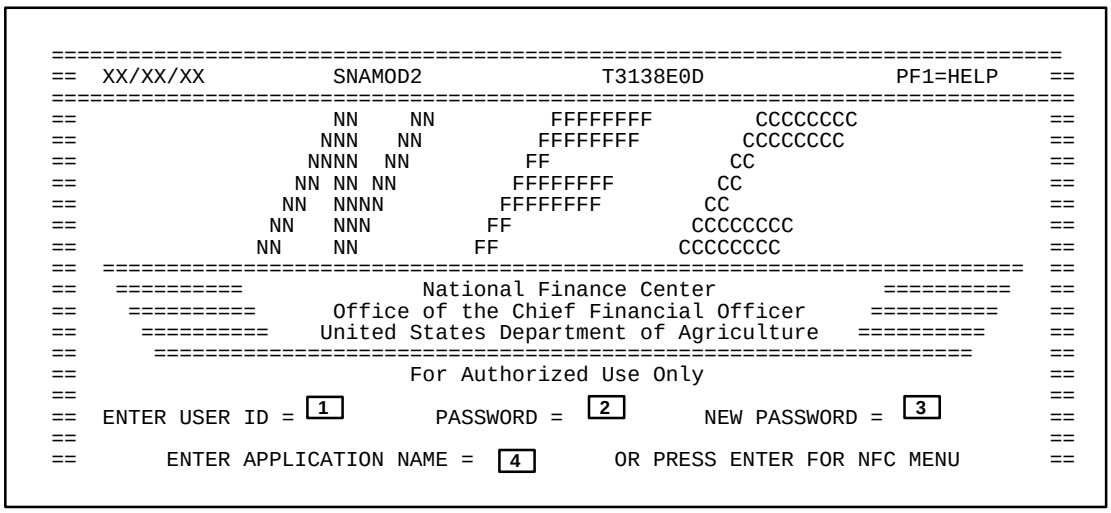

Figure 2:4. NFC Banner screen

Click on [OK]. The User Authentication Firewall screen (**Figure 2:2**).is displayed. Note: The User Authentication Firewall screen may be different from the screen shown.

Click [OK] again and the U.S. Government Computer Warning screen (**Figure 2:3**) is displayed.

Place the cursor inside the screen frame and press [Enter]. The NFC banner screen (**Figure 2:4**) is displayed. Respond to the prompts as follows:

[1] **Enter User ID** *(required, alphanumeric field; max. of 8 positions)***.** Key in your assigned NFC user ID (e.g., ***FHxxx***). Press [Tab].

[2] **Password** *(required, alphanumeric field; 8 positions)***.** Key in your password. Press [Enter].

[3] **New Password** *(conditional, alphanumeric field; 6 to 8 positions)***.** If your current password expires, key in a new password. Press [Enter]. You may change your password at any time but not more than once a day.

[4] **Enter Application Name** *(no-entry)***.** This field is not currently used for FFIS.

When NFC needs to communicate special system function messages, the Electronic Access Bulletin Board (**Figure 2:5**) is displayed. Read the message(s) shown and press [Enter] to display the User-specific NFC Menu (**Figure 2:6**). There may be multiple bulletin board messages. Continue to press [Enter]. If there are no messages, the user specific NFC Menu is displayed immediately.

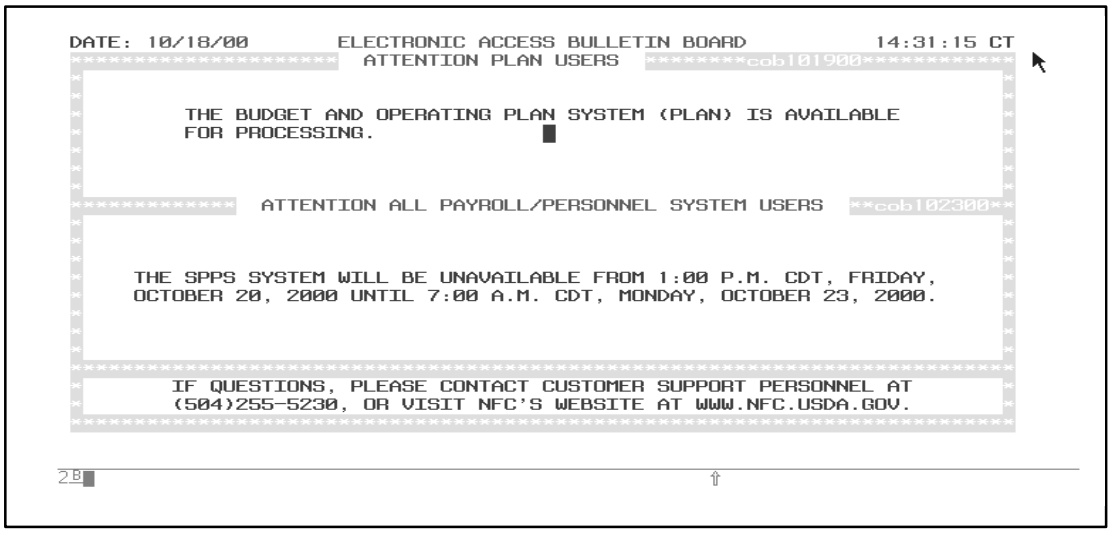

Figure 2:5. Electronic Access Bulletin Board

```
==========================================================================
==  XX/XX/XX      SNAMOD2       MENU for NFXXX   T3138E0D      10:49:06  CT   ==
==========================================================================
==                                                                        ==
==  SELECT ONE:                                                           ==
==                                                                        ==
==     1. PAYROLL/PERSONNEL SYSTEMS                                       ==
==     2. FINANCIAL INFORMATION SYSTEMS                                   ==
==     3. PROPERTY MANAGEMENT INFORMATION SYSTEMS                         ==
==     4. ADMINISTRATIVE INFORMATION SYSTEMS                              ==
==     5. DEVELOPMENT SYSTEMS  <NFC ONLY>                                 ==
==     6. DATA BASE TEST SYSTEMS  <NFC ONLY>                              ==
==     7. MISSION ASSIGNMENT TRACKING SYSTEM  <GAO ONLY>                  ==
==     8. DIRECTIVES BULLETIN BOARD                                       ==
==  ENTER APPLICATION NAME OR SELECTION NUMBER ==> 2           PF11 = EXIT    ==
==========================================================================
==                           MESSAGE BOARD                              ==
==========================================================================
==========================================================================
```

Figure 2:6. User-specific NFC Menu

Key in ***2*** at the Enter Application Name Or Selection Number prompt and press [Enter]. The Financial Information Systems menu (**Figure 2:7**) is displayed.

Key in ***16*** at the Enter Selection prompt and press [Enter]. The Foundation Financial Information Systems menu (**Figure 2:8**) is displayed.

Key in ***5*** at the Enter Selection prompt for CICSP15. The CICSP15 menu (**Figure 2:9**) is displayed.

Key in ***8*** for FF07 – Rural Development, at the Enter Selection prompt and press [Enter]. The message *MS0183 – Logon/Signon In Progress. Please Wait* is displayed (see **Figure 2:10**). Then, the USDA FFIS screen (**Figure 2:11**) is displayed.

```
==============================================================================
== XX/XX/XX                    T313903F                    17:00:48  CT    ==
==                      FINANCIAL INFORMATION SYSTEMS                       ==
==                                                                          ==
==    I. ENTRY-INQUIRY SYSTEMS                                              ==
==      1. CADI     AVAILABLE              II. REPORTING SYSTEMS            ==
==      2. BLCO     AVAILABLE            12. FOCUSRPT   AVAILABLE           ==
==      3. FAADS    AVAILABLE            13. BATCHFOC   AVAILABLE           ==
==      4. MASC     AVAILABLE             III. UTILITIES                    ==
==      5. MASCVAL  AVAILABLE            14. ISPF       AVAILABLE           ==
==      6. GLID     AVAILABLE            15. VPSPRINT   AVAILABLE           ==
==      7. PLAN     AVAILABLE             IV. FFIS SYSTEMS                  ==
==      8. DFIS     AVAILABLE            16. FFIS MENU  AVAILABLE           ==
==      9. TPIR     AVAILABLE              V. DATA WAREHOUSE                ==
==     10. ABCOINQ  AVAILABLE            17. CETR       AVAILABLE           ==
==     11. FREL     AVAILABLE            18. FUTURE                         ==
==                                        19. FUTURE                         ==
==                                        20. RPST       AVAILABLE           ==
==                                                                          ==
==                                                                          ==
==                                                                          ==
== PF1 = HELP  PF3 = NFCMENU   ENTER SELECTION 1-20  ==>      PF11 = EXIT    ==
==============================================================================
```

Figure 2:7. Financial Information Systems menu

```
==============================================================================
==   XX/XX/XX                    FF300007                    17:03:44  CT   ==
==                      FINANCIAL INFORMATION SYSTEMS                       ==
==                                                                          ==
==          IV. FOUNDATION FINANCIAL INFORMATION SYSTEMS                    ==
==                                                                          ==
==      1. CICST85  AVAILABLE                                               ==
==      2. CICST86  AVAILABLE                                               ==
==      3. CICSQ65  AVAILABLE                                               ==
==      4. CICSD9   AVAILABLE                                               ==
==      5. CICSP15  AVAILABLE                                               ==
==      6. CICSQ66  AVAILABLE                                               ==
==      7. CICSQ67  AVAILABLE                                               ==
==      8. CICST88  AVAILABLE                                               ==
==      9. CICSP11  AVAILABLE                                               ==
==     10. CICSP16  UNAVAILABLE                                             ==
==     11. CICSP18  AVAILABLE                                               ==
==                                                                          ==
==                                                                          ==
==                                                                          ==
==                                                                          ==
== PF1 = HELP  PF3 = NFCMENU   ENTER SELECTION 1-11  ==>      PF11 = EXIT
==============================================================================
```

Figure 2:8. Foundation Financial Information Systems menu

```
==========================================================================
==   xx/xx/xx                    T3139026                  12:29:07  CT   ==
==                      FINANCIAL INFORMATION SYSTEMS                     ==
==                                                                        ==
==                                CICSP15                                 ==
==                                                                        ==
==      1. FF00                   AVAILABLE                               ==
==      2. FF90-OCFO              AVAILABLE                               ==
==      3. FF08-RMA               AVAILABLE                               ==
==      4. FF63-RD Conversion     AVAILABLE                               ==
==      5. FF64-NRCS Conversion   AVAILABLE                               ==
==      6. FF65-FSA Conversion    AVAILABLE                               ==
==      7. FF66-APHIS Conversion  AVAILABLE                               ==
==      8. FF07-Rural Development AVAILABLE                               ==
==      9. FFFA-FSA               AVAILABLE                               ==
==                                                                        ==
==                                                                        ==
==                                                                        ==
==                                                                        ==
==                                                                         ==
== PF1 = HELP  PF3 = NFCMENU   ENTER SELECTION 1-9   ==>      PF11 = EXIT   =
```

Figure 2:9. CICSP15 menu

```
MS0183 - LOGON/SIGNON IN PROGRESS. PLEASE WAIT.

2B                                                              ⇧A
```

Figure 2:10. Logon/Signon message screen

```
**\   **\  ******\  *******\    ****\     ********\ ********\ ******\  ******\
**\   **\ ********\ ********\  ******\    ********\ ********\ ******\********\
**\   **\ **\\\\**\ **\\\\\**\ **\\\\**\   **\\\\\\\ **\\\\\\\   **\\\**\\\\**\
**\   **\ **\    \\ **\   **\ **\   **\    **\       **\          **\   **\   \\
**\   **\ *******\  **\   **\ ********\ * ******\    ******\      **\   *******\
**\   **\  *******\ **\   **\ ********\ * ******\    ******\      **\   *******\
**\   **\   \\\\**\ **\   **\ **\\\\**\    **\\\\\   **\\\\\      **\    \\\\**\
**\   **\ **\   **\ **\   **\ **\   **\    **\       **\          **\   **\  **\
 ******\\ ********\ ********\ **\   **\    **\       **\       ******\********\
  *****\   ******\\ *******\\ **\   **\    **\       **\       ******\ ******\\
   \\\\     \\\\\\   \\\\\\\   \\    \\     \\        \\        \\\\\\   \\\\\\

    THIS COMMERCIAL SOFTWARE IS DELIVERED WITH RESTRICTED RIGHTS TO THE
      GOVERNMENT, USE, REPRODUCTION, OR DISCLOSURE IS SUBJECT TO THE
        RESTRICTIONS SET FORTH IN THE FAR, DFAR, OR OTHER LICENSE
                    REFERENCED IN THE CONTRACT.

          SELECT BY NUMBER:  1.  TABLE INQUIRY/UPDATE (MTI)
                             X.  EXIT
    COMMAND:[1]
            USERID:  [2]            PASSWORD:  [3]
      NEW PASSWORD:  [4]        VERIFICATION:  [5]
```

Figure 2:11. USDA-FFIS screen

Respond to the following prompts:

1 **Command:** *(required, numeric field; 1 position)***.** Key in ***1*** to access the FFS screen. Press [Tab].

2 **UserID:** *(required, alphanumeric field; max. of 8 positions)***.** Key in your User ID (e.g., ***UGPAG01***). Press [Tab].

3 **Password:** *(required, alphanumeric field; 8 positions)***.** Key in your FFIS production password (not your Financial Data Warehouse password). Press [Enter].

4 **New Password:** *(conditional, alphanumeric field; 8 positions)***.** If your current password expires, key in a new password. Press [Tab]. You may change your password at any time but not more than once a day.

5 **Verification:** *(conditional, alphanumeric field; 8 positions)***.** Key in your new password again. Press [Enter]. The FFS screen (**Figure 2:12**) is displayed.

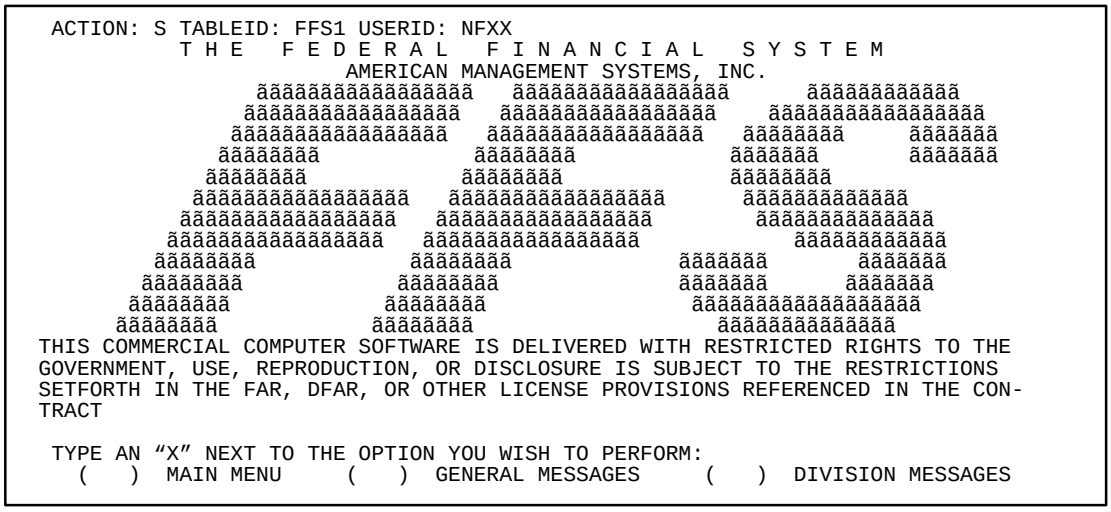

Figure 2:12. FFS screen

Sign-Off

Instructions for exiting FFIS vary slightly, depending on whether you are exiting from a table screen or a document screen. Each method is described below.

- To exit FFIS **from a table**, key in ***E*** (exit) at the Action field and press [Enter]. The USDA FFIS screen (see **Figure 2:11**) is displayed. Key in ***X*** at the Command field and press [Enter]. A blank screen is displayed. Key in ***Bye*** (see **Figure 2:13**) and press [Enter].

OR

- To exit FFIS **from a document**, key in ***End*** at the Command field and press [Enter]. The FFS screen (see **Figure 2:12**) is displayed. Key in ***E*** (exit) at the Action field and press [Enter]. The USDA FFIS screen (see **Figure 2:11**) is displayed. Key in ***X*** at the Command field and press [Enter]. A blank screen is displayed. Key in ***Bye*** (see **Figure 2:13**) and press [Enter].

To disconnect from the mainframe, follow your telecommunications instructions. If you do not intentionally disconnect from the mainframe, you are automatically disconnected after your terminal is inactive for a short time.

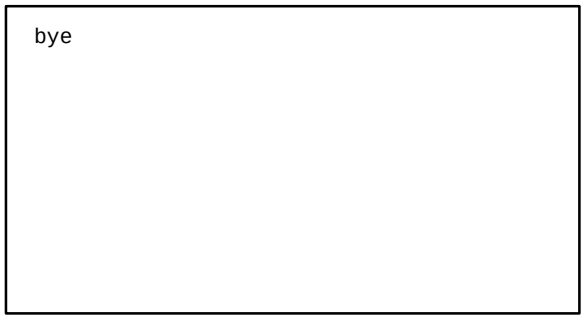

Figure 2:13. Sign-Off screen

Using Documents

This section provides information that is common to all documents, including general navigating and processing instructions. These instructions are referred to throughout other parts of this procedure. After you have reviewed this information thoroughly and feel comfortable with your understanding of documents, use the **Part 11, Quick Reference Guides (QRG)** to help recall codes and field instructions from this section.

Document Format

Most FFIS documents have a common format, consisting of a **header screen** and one or more **line screens**. The first two lines of every screen, called the **document command lines**, contain selection fields. The third line contains the complete document title. (See the shaded area in **Figure 2:14**.) The command line fields and other document format features are described in more detail below.

The **first** line includes three fields:

Command. Contains the document action code that specifies an action to be performed. A list of document action codes and their descriptions are provided under **Document Commands**.

DocID. Contains the characters that identifies the document. The configuration of the DocID will vary depending on whether the document is direct entered or the result of the update of feeder system activity. Refer to **Part 11**, **Quick Reference Guides.**

Date. Contains the current date when adding a new document or the date the document updated the database. If a document has not updated the database, FFIS displays the last date an action was performed on the document.

The **second** line includes three fields:

Status. Contains a code that identifies the processing status of the current document (e.g., HELD, SCHED). A list of status codes and their descriptions are provided under **Status Codes**.

BatID. Contains the identification number for an amended document and is displayed only if the document has been modified. The batch ID is comprised of the transaction code, Sec1 code, and batch number.

Sec2. Contains the 2-position agency code that is system generated from the user's ID (e.g., ***xxxx***). This code verifies the user's authority to create a document, but it is not displayed on the screen.

Following the document title on the **third line** are the document-specific **header** and **line fields**. Header fields, which appear on the header screen, contain general information about the entire transaction (e.g., vendor code, transaction date, document total). Line fields (**Figure 2:15**), which may appear on header and line screens, contain detailed accounting information (e.g., budget object code, line amount). Note: On line screens, lines are numbered by the user 001, 002, etc. The system uses 01– and 02–, etc. as placeholders regardless of the actual line number record being entered. Additionally, the number of line records per screen varies depending on the type of document and the amount of data fields per line record. Up to 999 different accounting lines may be recorded on a single FFIS transaction.

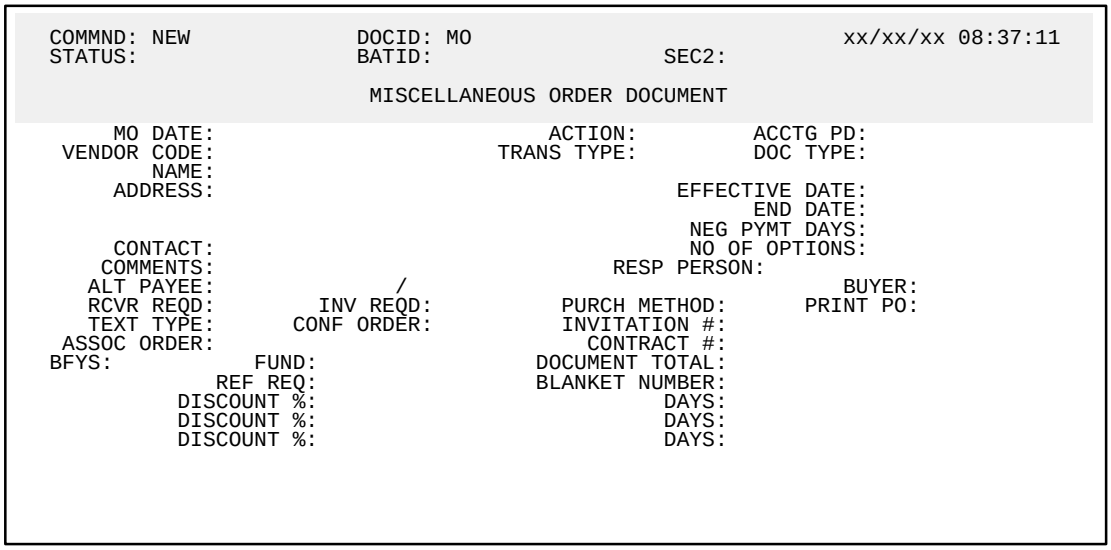

Figure 2:14. Example of document format

```
COMMND:                DOCID:                                XX/XX/XX 14:37:25
STATUS:                BATID:                SEC2:              000-000 OF 000
01-
      LINE: 003      REF REQ-LINE:                   BUDGET FYS:
      FUND:        BUDGET ORG/SUB:          /       COST ORG/SUB:          /
       PGM:              BOC /SUB:       /                RPTG:
    JOB NO:           CLOSED BFYS:                  CLOSED FUND:
    AMOUNT:                I/D:     P/F:       ASSOC ORDER:
     DESCR:
02-
      LINE: 004      REF REQ-LINE:                   BUDGET FYS:
      FUND:        BUDGET ORG/SUB:          /       COST ORG/SUB:          /
       PGM:              BOC /SUB:       /                RPTG:
    JOB NO:           CLOSED BFYS:                  CLOSED FUND:
    AMOUNT:                I/D:   P/F:          ASSOC ORDER:
     DESCR:
```

Figure 2:15. Example of line fields

If a document has both header and line screens, the document name is usually displayed only on the header screen. If line data appears on a screen, the number of lines displayed on the current screen and the number of total lines in the document appear below the Date field (**Figure 2:15**). Note: When the same field appears on both the header and line screens, the data entered in the line field takes precedence and overrides any data entered in the header field.

Document ID (DocID)

The DocID is a unique record identifier for every document processed in FFIS. It is assigned at the time the user enters a document in FFIS or at the time the document is generated by an interface. The DocID consists of a document transaction code, Sec1 code, and a document number of up to 11 alphanumeric characters (e.g., PV, OM (Sec1 code is a 2-digit code) 12345678901).

The **document transaction code** is a 2-character acronym that identifies the document screens that are used to process certain kinds of transactions. Processing privileges can be restricted according to document transaction code. See **Part 9, Appendixes B, C, D** and **E** for details.

Examples of document transaction codes:

MO = Miscellaneous Order Document

PV = Payment Voucher Document

The **Sec1 code** is a 2-character alpha code that identifies the organizational entity where the document originates (e.g., ***OM***). This code equates to the division code in the Accounting Classification Code Structure (ACCS). Specific processing privileges can be restricted according to Sec1 code as well as specific document transaction codes.

The **document number** is an alphanumeric code of up to 11 characters (e.g., 12345678901). It identifies a single document and should be descriptive or logical in sequence. The combination of the document transaction code and document number must be unique in FFIS. However, the document number can be the same for different document transaction codes (e.g., MO OM 12345678901, PV OM 12345678901).

The **transaction type** is not to be confused with the document transaction code. The transaction type specifies the type of accounting event (e.g., expenditures, offsets, accounts receivables, etc.).

Examples of a transaction type:

PN = Pending apportionment

All documents require a transaction type in the Transaction Type field (which may be shown on the document screen as *TR Type, Trans Type, etc.*). FFIS uses the combination of the transaction code and the transaction type to access a record in the Accounting Entries Definition Reference Table (ACED) to obtain the accounting entry ID. The system uses the **accounting entry ID** to determine:

- Which general ledger accounts are debited and credited
- Which inquiry tables are updated with information about the transaction

Document Commands

Document commands are used to navigate through the system and process data. Each command corresponds to a specific action. To perform an action, the user enters the applicable command in the document's Command field. The commands for navigating and processing documents as well as commands for batch processing are listed below. Note: Some of these commands can only be used based on the user's security access.

A = **Approve Doc.** Used to apply approval authority to the current document.

AB = **Approve Bat.** Used to apply approval authority to the current batch document.

BB = **Bottom Bat.** Used to display the last screen of the batch of documents.

B = **Bottom Doc.** Used to display the last screen of the document.

D = **Delete Doc.** Used to delete a document. The status of the current document is changed to Deleted. The user can delete any integrated document any time prior to processing through PASS2 (see **System Edits** for additional information on PASS2 processing). The document is scheduled for deletion, removed from the Document Suspense File during the overnight processing and archived. Note: For information about deleting integrated documents, see **Deleting An Integrated Document**.

DB = **Delete Bat.** Used to delete a batch. The status of the current batch is changed to Deleted. The user can delete a batch any time prior to processing through PASS2 (see **System Edits** for additional information on PASS2 processing). The batch is scheduled for deletion, removed from the Document Suspense File during the overnight processing and archived.

DIS = **Discard**. Used to clear the document work area. All work since the last time the Document Suspense File was updated is lost. If no function has been entered that caused the document to be written to the Document Suspense File, this command effectively cancels the document entry. If the document has been previously saved on the Document Suspense File, it still exists there and the user must access it again and use the Delete command to remove it.

Use discard in the correction mode to erase any changes made since retrieving the document and prior to processing the document. Only the information entered since retrieving or processing the document is discarded.

DISE = **Discard and End**. Used to perform the Discard function and end the session.

DL = **Delete Line.** Used to remove the detail line, where the cursor is located, from the document.

E = **Edit Doc.** Used to perform an edit on the current document. If no errors are detected, FFIS displays a message indicating a successful edit. If errors are detected, the displays is repositioned to the screen containing the first error detected within the document.

EB = **Edit Batch.** Used to perform an edit on the current batch. If no errors are detected, the system displays a message indicating a successful edit. If errors are detected, the display is repositioned to the screen containing the first error detected within the batch.

End or ***F*** = **End.** Used to exit documents and return to tables. If the user entered documents from the Document Suspense File, the system would return to the Document Suspense File. If the user entered documents through a direct leaf, the system would return to the screen where the leaf was entered.

If the user has not saved the latest changes to the document, the system prompts the user to either save or discard those changes before allowing the End function. The user should not place an unedited document on the Document Suspense File. Therefore, edit the document, then End.

G or ***Get*** = **Get.** Used to retrieve the first screen of the requested document. The document ID must be entered in the DocID field on the screen. The system will either allow correction to the document or put the document in Scan mode, depending on the status of the document.

H = **Hold Document.** Used to change the status of the current document to Held.

HB = **Hold Batch.** Used to change the status of the current batch to Held.

HE = **Hold Document and End**. Used to change the status of the current document to Held, end the session, and return the user to tables.

I = **New Line.** Used to create new lines within an existing document. The user places the cursor on the detail line where the new detail lines should follow. If the cursor is not on a specific detail line, the new line is inserted before the first detail line on the screen.

M = **More**. Used to refill the error message area of the screen. This function is only valid when the current screen's error message area has overflowed. The system automatically inserts this function in the command field when the overflow condition is detected.

N = **Next.** Used to reposition the display to the next screen.

New = **New.** Used to begin data entry on a new document. A blank data entry screen is presented to the user.

O = **Override Doc.** Used to apply a user's error override authority to the current document. The use of this command requires special approval authority.

OR = **Override Doc and Run**. Used to apply a user's error override authority and run the current document. The use of this command requires special approval authority.

P = **Pause**. Used to temporarily pause out of a document to a table. ***P*** must be followed by a space and the Table ID. For additional information on the Pause command, see **Pausing From A Document To A Table**.

R = **Run Doc.** Used to submit the current document for Pass2 processing (see **System Edits** for additional information). If no errors are detected, the system returns the user to the top of the document with a message indicating a successful run. If errors are detected, the error messages are displayed at the bottom of the screen.

RB = **Run Batch.** Used to submit the current batch for processing. If no errors are detected, the system returns the user to the top of the batch with a message indicating a successful run.

RBE = **Run Batch and End**. Used to perform the run batch function and end the session.

RE or ***F3*** = **Run Doc and End**. Used to submit the current document for PASS2 processing. If no errors are detected, FFIS returns the user to the previous screen. If errors are detected, display is repositioned to the screen containing the first error detected within the document.

SA = **Show Approvals**. Used to determine the approvals that are pending on the batch or document and produce error messages indicating the current approval status of the document.

T = **Top Doc** = Used to reposition the display to the document header.

TB = **Top Bat.** Used to reposition the display to the batch header.

UNA = **Unapprove Doc.** Used to remove the user's approval authority from the current document. The use of this command requires special approval authority.

UNAB = **Unapprove Bat.** Used to remove the user's approval authority from the current batch. The use of this command requires special approval authority.

UND = **Undelete Doc.** Used to change the status of the current document from Delete to Held. The use of this command requires special approval authority.

UNDB = **Undelete Bat.** Used to change the status of the current batch from Delete to Held. The use of this command requires special approval authority.

X = **Discard.** Used to clear the document work area. All work since the last time the Document Suspense File was updated is lost. If no function has been entered that caused the document to be written to the Document Suspense File, this command effectively cancels the document entry. If the document has been previously saved in the Document Suspense File, it still exists there and the user must access it again and use the Delete command to remove it from the file.

XE = **Discard and End**. Used to perform the Discard function and end the session.

Status Codes

Status codes for both documents and batches are displayed on every Document Input screen and in the Document Suspense File. Below is a list of status codes with descriptions.

ACCPT = **Accepted.** Indicates that the document has been processed through PASS2. All updates have been completed.

BHELD = **Batch Held.** Indicates that the batch document is held. This status appears only on documents within a batch.

BRJCT = **Batch Rejected.** Indicates that the batch document will not be processed until errors are corrected. This status appears only on documents within a batch.

BSCHD = **Batch Scheduled.** Indicates that processing will occur overnight. This status appears only on documents within a batch.

DELET = **Delete.** Indicates that the batch or document has been marked for deletion. It will be removed from the Document Suspense File during overnight processing.

HELD = **Held.** Indicates the batch or document has been put on hold by the user.

PEND1 = **Pending 1.** Indicates that Level 1 approval is pending.

PEND2 = **Pending 2.** Indicates that Level 2 approval is pending.

PEND3 = **Pending 3.** Indicates that Level 3 approval is pending.

PEND4 = **Pending 4.** Indicates that Level 4 approval is pending.

PEND5 = **Pending 5.** Indicates that Level 5 approval is pending.

REJCT = **Rejected.** Indicates that the batch or document has rejected due to errors.

SCHED = **Scheduled.** Indicates that the batch or document has been scheduled for offline update processing. Processing will occur overnight.

Navigating In Documents

As an FFIS user, you can move from a document to a table (the Pause command) or exit from a document to the FFS screen (the End command) using the instructions below.

Pausing From A Document To A Table. The Pause action may be used at any point during document processing to refer to information contained in a table. Follow these steps, to pause from a document to a table:

1. At the Command field, enter ***P*** for pause**,** then press the space bar once.

2. Key in the 4-character table ID and press [Enter]. The specified table is displayed.

3. To return to the document, enter ***E*** (exit) in the table Action field.

4. Press [Enter]. This ends the Pause session and returns you to the document that was displayed before beginning the Pause.

The user may perform as many table Pause actions as desired.

Exiting To The FFS Screen From A Document. The End action may be used at any time while you are in a document. At the document Command field, key in ***End*** and press [Enter]. The FFS screen is displayed. Note: To exit FFIS, see **Sign-Off** under Accessing The System.

Processing In Documents

As an FFIS user, you can **add**, **change, modify, deactivate, cancel**, and/or **delete** documents in the system. The Change and Deactivate actions are used for **budgetary** documents; the Modify and Cancel actions are used for **spending** documents. The Modify action is also used for **general ledger** documents.

General instructions for document actions are provided below. These instructions may differ in a few documents; however, the differences are addressed in the specific instructions for those documents. To locate instructions on a specific document, see **Part 9, Appendix B, Alphabetical integrated Document List**, to find the function (part) where the document is located. Then refer to the **Table Of Contents** for the page number.

Adding A Document. Follow the steps below to add a document.

1. At the FFS screen, key in ***L*** (leaf) at the Action field and the applicable document transaction code (e.g., AA) at the TableID field.

2. Press [Space Bar] to erase the remaining 2 characters of the TableID, then press [Enter]. The document screen is displayed with ***New*** in the Command field.

3. Complete the fields according to instructions for the specific document, provided in this procedure.

4. After completing the fields, key in ***E*** (edit) in the Command field and press [Enter] to edit the data. If errors are detected, error messages are displayed at the bottom of the screen. For more information about error messages and correcting errors, see **System Edits.**

5. After the data passes system edits, key in ***R*** (run) at the Command field and press [Enter] to process. The message *All Lines Added* is displayed at the bottom of the screen.

- To add another document with the same transaction code, key in ***New*** at the Command field and repeat the above process starting from step 3.
- To add a document with a different transaction code, exit to the FFS screen and repeat the above process.

Changing/Deactivating A Budget Document. To change or deactivate a budget line, first create a new document with the appropriate fields and then enter ***C*** for change or ***D*** for deactivate in the action field. Press [Enter]. To change the dimensions for the suballotment, go to the Suballotment Options Inquiry Table (SAOP).

Modifying A Spending/General Ledger Document Note: If the document has been archived, see **Recreating An Archived Document.** Follow the steps below to modify a document.

1. At the applicable document screen, key in ***G*** or ***Get*** at the Command field and the document identifier at the DocID field. Press [Enter]. The selected document is displayed.

2. At the selected document, key in ***New*** at the Command field. Press [Tab] to the BatID field.

3. Key in the batch ID and press [Enter]. The Batch Ticket screen is displayed.

4. Press [Enter] again and a new header screen is displayed with the document ID and the system generated batch ID.

5 Key in ***M*** (modify) in the data field.

Note: Depending on the document screen, this field maybe displayed as Header Action Ind, Document Action, etc.

6. Modify the remaining fields as applicable using instructions for the specific document provided in this procedure.

7. After completing the fields, key in ***EB*** (edit batch) at the Command field and press [Enter]. If errors are de-

tected, error messages are displayed at the bottom of the screen. (For more information about error messages and correcting errors, see **System Edits**.)

8 After the data passes system edits, the message *No Errors Detected* is displayed at the bottom of the screen. Key in ***RB*** (run batch) and press [Enter] to process. The message *All Documents Accepted* is displayed at the bottom of the screen.

- To modify another document, repeat the above process.

Canceling A Spending Document. Note:You cannot cancel a spending document before it has been accepted or after an order has been placed. If the document has been archived, see **Recreating An Archived Document**. Use the following steps to cancel a document.

1. At the applicable document screen, key in ***G*** or ***Get*** at the Command field and the document identifier at the DocID field. Press [Enter]. The selected document is displayed.

2. At the selected document, key in ***New*** at the Command field. Press [Tab] to the BatID field.

3. Key in the batch ID and press [Enter]. The Batch Ticket screen is displayed.

4. Press [Enter] again and the new header screen is displayed.

5. Key in ***X*** (cancel). Note: Depending on the document screen, this field maybe displayed as Header Action Ind, Document Action, etc.

6. Key in ***EB*** (edit batch) at the Command field and press [Enter] to edit. If errors are detected, error messages are displayed at the bottom of the screen. (For more information about error messages and correcting errors, see **System Edits**.)

7. After the data passes system edits, the message *No Errors Detected* is displayed at the bottom of the screen. Key in ***RB*** (run batch) and press [Enter] to process. The message *All Documents Accepted* is displayed at the bottom of the screen.

- To cancel another document, repeat the above process.

Deleting An Integrated Document. The Delete action is used for all integrated documents. If your security access does not allow you to delete an integrated document, contact your designated agency point of contact. Note: You cannot delete a document after it has been accepted. If the document has been archived, see Recreating An Archived Document, below. Follow the steps below to delete a document.

1. At the applicable document screen, key in ***G*** or ***Get*** at the Command field and the document identifier at the DocID field. Press [Enter]. The selected document is displayed.

2 At the selected document, key in ***D*** at the Command field and press [Enter]. The message *Document Marked For Deletion* is displayed at the bottom of the screen.

- To undo the deletion, prior to performing another action, key in ***UND*** (undelete doc) at the Command field and press [Enter]. The message *Document Undeleted* is displayed at the bottom of the screen.

- To delete another document with the same transaction code, repeat the above process.

- To delete a document with a different transaction code, exit to the FFS screen, leaf to the document, and repeat the above process.

Deleting An Interfaced Document. Agency users cannot delete an interfaced document. Requests to delete interfaced documents must be sent to the Agency's Functional Administrator, who will coordinate with Agency and NFC personnel as appropriate.

Recreating An Archived Document. If the document has been archived (no longer in the Document Suspense File), the ***New*** command must be used to recreate the original document.

Note: If the DocID is unknown, go to the appropriate document header and line table(s) to obtain information to reconstruct the document ID. For example, if the document is an MO, go to the OBLH and OBLL.

Follow the steps below to recreate an archived document for processing appropriate actions (i.e., deleting or canceling).

1. Leaf to the applicable document screen. ***New*** is at the Command field. Press [Tab]. Key in the document number of the document to be modified at the DocID field. Press [Tab] to place the cursor in the BatID field.

2. Key in the appropriate transaction code (e.g., *MO*). Press [Tab]. Key in the same Sec1 code as entered on the original document (e.g., ***xx***). Press [Tab]. Key in a batch number (*max. of 6 positions*). You may name the batch as desired.

3. Press [Enter]. The Batch Ticket screen is displayed. Press [Enter] again and the new header screen is displayed.

4. Press [Tab] to place the cursor in the Action field. Key in the appropriate action using the instructions above for changing/deactivating, modifying, or canceling. Note: You cannot cancel a document if it has been partially or fully liquidated by an order or receivable.

5. Key in ***EB*** (edit batch) at the Command field and press [Enter] to edit. If errors are detected, error messages are displayed at the bottom of the screen. (For more information about error messages and correcting errors, see **System Edits**.)

6. After the data passes system edits, the message *No Errors Detected* is displayed at the bottom of the screen. Key in ***RB*** (run batch) and press [Enter] to process. The message *All Documents Accepted* is displayed at the bottom of the screen.

- To recreate another archived document with the same transaction code, repeat the above process.

- To recreate another archived document with a different transaction code, exit to the FFS screen, leaf to the document, and repeat the above process.

Using Tables

This section provides general instructions for using tables to process and query data. These general instructions are referred to throughout other parts of this procedure. After you have reviewed this information thoroughly and feel comfortable with your understanding of tables, use the **Part 11, Quick Reference Guides (QRG)** to help you recall codes and field instructions from this section.

Table Format

Most FFIS tables have a common format. The first three lines (shaded in **Figure 2:16**) are the same on most FFIS tables. These lines are described below.

The **first** line (the **table action line**) displays three fields:

Action. Contains the table action code that identifies the action to be performed. A variety of action codes are available for moving between tables, searching for records on tables, and viewing individual table records. A list of table action codes and descriptions is provided below.

TableID. Contains a 4-character acronym (e.g., FUND) that identifies the current table.

UserID. Contains the first 4 characters of the user's ID (e.g., XXXX).

The **second** line displays the **table name**. Names on reference and data entry tables are left justified; inquiry table names are centered and emphasized by asterisks.

The **third** line displays the **key fields** for a table. Key fields are used to locate table records. Every table record has specific key fields that uniquely identify it.

The order of the key fields is also the order in which records are stored in a table. Since key fields are in order from the general to the more specific, each key field that you enter narrows the number of records being selected. The *narrowing* ability of key fields allows you to select a specific record or group of records based on the key fields entered. This selection process saves time and effort by reducing the number of records that must be viewed to find the desired record.

Key fields should be entered from left to right. Throughout this procedure, the key symbol (🔑) is used to identify key fields.

The **remaining lines** in the table are the data fields specific to that table.

Note: The exceptions to standard table format are the Document Suspense File and the General Ledger Detail Balance Inquiry Table (GLDB). Although the format is similar, key fields do not appear since the method of retrieving data for these tables does not require the use of key fields.

Table Action Codes

Table action codes are used to navigate through the system and process data. To perform an action, the user enters the applicable code in the table's Action field.

A = **Add.** Used to add records in data entry or reference tables.

B = **Back.** Used to leaf backward to the previous table. Note: This code may be used only after the Leaf action has been performed.

C = **Change.** Used to change records in data entry or reference tables.

D = **Delete.** Used to delete records in data entry or reference tables.

```
ACTION: S TABLEID: FUND USERID: XXXX
FUND REFERENCE TABLE
KEY IS BFYS, FUND

 BFYS:          FUND:        FUND TYPE:      BUDGET CATEGORY:

 NO YEAR IND:        CARRYOVER IND:      TREASURY SYMBOL:
 FUND NAME:                                SHORT NAME:
 FUND CLASS:      FUND CAT:       FUND GROUP:    SUBCLASS ACCT IND:
 AGENCY:          AGENCY NAME:
 AGENCY LOCATION CODE:    -    -       BUREAU CODE:    -    -
                ALLOW UNOBLIG EXPEND AGAINST EXPIRED:
                        MEMO DEPRECIATION TRANS TYPE:
                                  RPT224 COLUMN IND:

                          ***  INTEREST ACCT  ***
       ORG:                      PGM:                      BOC:
    JOB NO:                 RPTG CATG:
                          ***  DISCOUNT ACCT  ***
       ORG:                      PGM:                      BOC:
    JOB NO:                 RPTG CATG:
```

Figure 2:16. Example of table structure

E = **Exit.** Used to exit a table.

F = **Forward.** Used to leaf forward to the next table. Note: This code may be used only after the Leaf action has been performed.

G or ***Get*** = **Get.** Used to get a specific record when all the table key fields are entered. The navigate forward and backward actions cannot be used after the ***G*** or ***Get*** action is used.

L = **Leaf.** Used to move from a record on one table to the corresponding/related record on another table while maintaining a link to the original table. Also, use L to move from tables to documents.

N = **Next.** Used to move to another table or to blank out the fields of the current table.

R = **Refill.** Used to refill the table with the next sequential record(s). ***R*** automatically appears in the Action field after an ***S*** action is performed.

S = **Scan.** Used to access a record in a table when only a portion of the table key is known. The system displays the first matching record for the key fields entered. ***S*** automatically appears in the Action field after an N action is performed.

Z = **Zoom.** Used to move from table to table without losing the original record from the first table accessed.

< = **Navigate Backward.** Used to move backward in a series of up to five screens saved by the system, counting the first screen.

Navigating In Tables

As an FFIS user, you can move through the system, from table to table or table to document, using the navigating action codes previously described. Below are general instructions for each navigating action.

Leafing From Table To Table. The Leaf action is used to move forward and backward from a record in one table to a related record in another table.

To leaf from one table to another, follow these steps, beginning at the first table:

1. Key in ***L*** (leaf) at the Action field.

2. Key in the applicable table ID at the TableID field.

3. Press [Enter]. The specified table is displayed with ***R*** (refill) in the Action field. The record related to the data in the original table appears first. If no relationship exists between the data in the two tables, the first record in the new table is displayed.

4. To move between the two tables, use the ***B*** (back) and ***F*** (forward) actions.

Leafing From A Table To A Document. The Leaf action is also used to move from a table to a document to perform various document commands.

To leaf from a table to a document, follow these steps:

1. Key in ***L*** (leaf) at the Action field.

2. Key in the applicable document transaction code (e.g., ***AA***, ***BD***, etc.) at the TableID field.

3. Press [Space Bar] to erase the remaining 2 characters in the TableID field.

4. Press [Enter]. The document specified in step 2 is displayed with the blank document input screen.

Zooming From Table To Table. The Zoom action is used to stack up to five table queries and move from table to table without losing the original record from the first table. (You cannot zoom from a table to a document.) This action is useful when determining valid reference table codes (e.g., fund, budget object class).

To zoom from one table to another, follow these steps, beginning at the first table:

1. Key in ***Z*** (zoom) at the Action field.

2. Key in the applicable Table ID at the TableID field.

3. Press [Enter]. The table specified in step 2 is displayed.

4. To zoom to a third table, repeat steps 1–3. From the third table, you can zoom to a fourth table, and from the fourth table you can zoom to a fifth table.

5. From any of the stacked tables, to return to the original record on the first table, enter ***E*** (exit) in the Action field and press [Enter]. This ends the Zoom session and returns you to the record you were viewing on the previous table. (The table that you return to has all the data that you were viewing before you performed the Zoom command.)

Note: FFIS allows you to zoom up to four times, *stacking* up to five tables on top of one another. Therefore, you must exit each Zoom session separately to return to your initial session.

Exiting To The FFS Screen From A Table. The Exit action may be used at any time while you are in a table. At the Action field, key in ***E*** (exit) and press [Enter]. The FFS screen is displayed. Note: To exit FFIS, see **Sign-Off** under **Accessing The System**.

Processing In Tables

As an FFIS user, you can **add**, **change**, **display,** and/or **delete** records in data entry and reference tables; however, generally you can only display records in inquiry tables. Table maintenance for common and combination tables is performed by NFC's FFIS Operations Branch. Below are general instructions for adding, changing, displaying, and deleting records. Detailed field instructions for adding and changing records in specific tables are provided in other parts of this proce-

dure. Note: In a few tables, the instructions may differ slightly from the general instructions below; however, these differences are addressed in the specific instructions for those tables. For instructions on a specific inquiry, data entry, or reference table, see **Part 8, FFIS Tables**.

Note: If you are not authorized to perform a specific processing action (adding, changing, or deleting a record) in the table, contact your Functional Administrator responsible for Table Maintenance.

Adding A Table Record. At the FFS screen or at any table screen, key in ***N*** (next) at the Action field and the table ID at the TableID field. Press [Enter]. The table screen is displayed with ***S*** (scan) in the Action field.

Key in ***A*** (add) at the Action field to add records to data entry or reference tables. Complete the remaining fields according to the specific instructions for the table (located in the applicable part in this procedure).

After keying in the data, press [Enter]. All records (lines) that are error-free or tagged with warning messages are added; records that contain either overrideable or fatal errors are not added. The message *All Lines Added* is displayed at the bottom of the screen to indicate that all or some records have been added; if any records contain errors, error messages are also displayed. For more information about error messages and correcting errors, see **System Edits**.

To add another record, repeat the above process.

Displaying A Table Record. At any table screen, use one of the following methods to display one or more records:

☐ With ***S*** (scan) in the Action field, press [Enter] to display the table and scan for the specific record. If additional records exist, ***R*** (refill) appears in the Action field. To display the additional records, press [Enter].

OR

☐ With ***S*** in the Action field, key in data at any or all of the key (🔑) fields and press [Enter]. The system selects and displays a specific range of records based on the data. Note: If you key in complete data, the specified record appears first. If additional records exist, ***R*** appears in the Action field. To display the additional records, press [Enter].

OR

☐ To display a specific single record, key in ***G*** or ***Get*** at the Action field and complete the key (🔑) fields. Press [Enter].

FFIS allows you to move back and forth (up to five screens). To navigate forward, key in > (the *greater than* sign) at the Action field and press [Enter].

- To navigate backward, key in < (the *less than* sign) at the Action field and press [Enter].

- To display another record, repeat the above process.

Changing A Table Record. At any table screen, display the record using one of the methods referenced above under **Displaying A Table Record**. When the record is displayed, key in ***C*** at the Action field and make the appropriate changes.

After keying in the data, press [Enter]. All records (lines) that are error-free or tagged with warning messages are changed; records that contain either overrideable or fatal errors are not changed. The message *All Lines Changed* is displayed at the bottom of the screen to indicate that all or some records have been changed; if any records contain errors, error messages are also displayed. For more information about error messages and correcting errors, see **System Edits.**

- To change another record, repeat the above process.

Deleting A Table Record. At any table screen, display the record(s) to be deleted using one of the methods (the ***S*** or ***G*** actions) referenced above under **Displaying A Table Record**.

☐ If you display multiple records (the ***S*** action), you can delete only those records displayed on the current screen. Note: Some tables have one record per screen and some tables have multiple records on one screen. Also, you must specify the record(s) not to be deleted, as follows: Move to the first key (🔑) field of each record not to be deleted and press the [Space Bar] to remove the first character. **Caution:** All **unspecified** records on the screen are deleted.

At the Action field, key in ***D*** (delete) and press [Enter]. The deleted records are displayed with the message *All Lines Deleted*, verifying that all **unspecified** records have been deleted.

OR

☐ If you display a single record (the ***G*** action), key in ***D*** at the Action field and press [Enter]. The message *All Lines Deleted* is displayed, verifying that the record has been deleted. If you erroneously deleted the record, restore it as described in the note below.

Note: If you erroneously delete any records, you must restore them **before** performing another action. To restore records, key in ***A*** at the Action field and press [Enter]. The message *All Lines Added* is displayed, verifying that the deleted records have been restored.

To delete more records, repeat the applicable process above.

Keyboard Functions

The following is a list of keys commonly used to navigate within FFIS. For instructions on your equipment usage, see the manufacturer's operating guide.

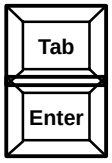

Used to move the cursor to the next field.

Used to execute an action.

Used to move the cursor to the Action field in tables or the Command field in documents.

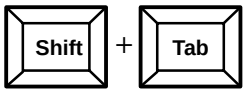

Used to move the cursor to the previous field.

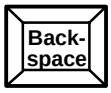

Used to erase the character prior to the cursor.

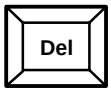

Used to erase the character under the cursor.

System Edits

FFIS processes documents in two passes; an edit pass (PASS1) and an update pass (PASS2). In PASS1, the system performs a series of edits or validation steps and does not permanently update the database. The update to the database occurs during PASS2 processing. **Figure 2:17** illustrates an example of document processing.

PASS1 (Edits Only)

To process a document through PASS1, key in ***E*** (edit document) at the Command field and press [Enter]. The system:

- Verifies document information against reference table values.
- Ensures all required fields are completed.
- Performs a funds availability check.
- Stores the document ID with a status of SCHED (scheduled) on the Document Suspense File if no errors are detected.
- Processes those documents with a status of SCHED in the overnight PASS2 process.
- Enables users to change information on the document screens.

Additional edits may occur, depending on the type of document and the information entered.

When a document fails PASS1 processing, the status field reads ***REJCT*** and FFIS displays error messages at the bottom of the document screen. It also displays the screen that has the first set of errors. Up to six error messages can be displayed at a time. If additional errors exist, an ***M*** (more) is displayed in the Command field.

PASS2 (Run an Update)

Key in ***R*** at the Command field and press [Enter]. The system:

- Performs the edit checks that are performed in PASS1.

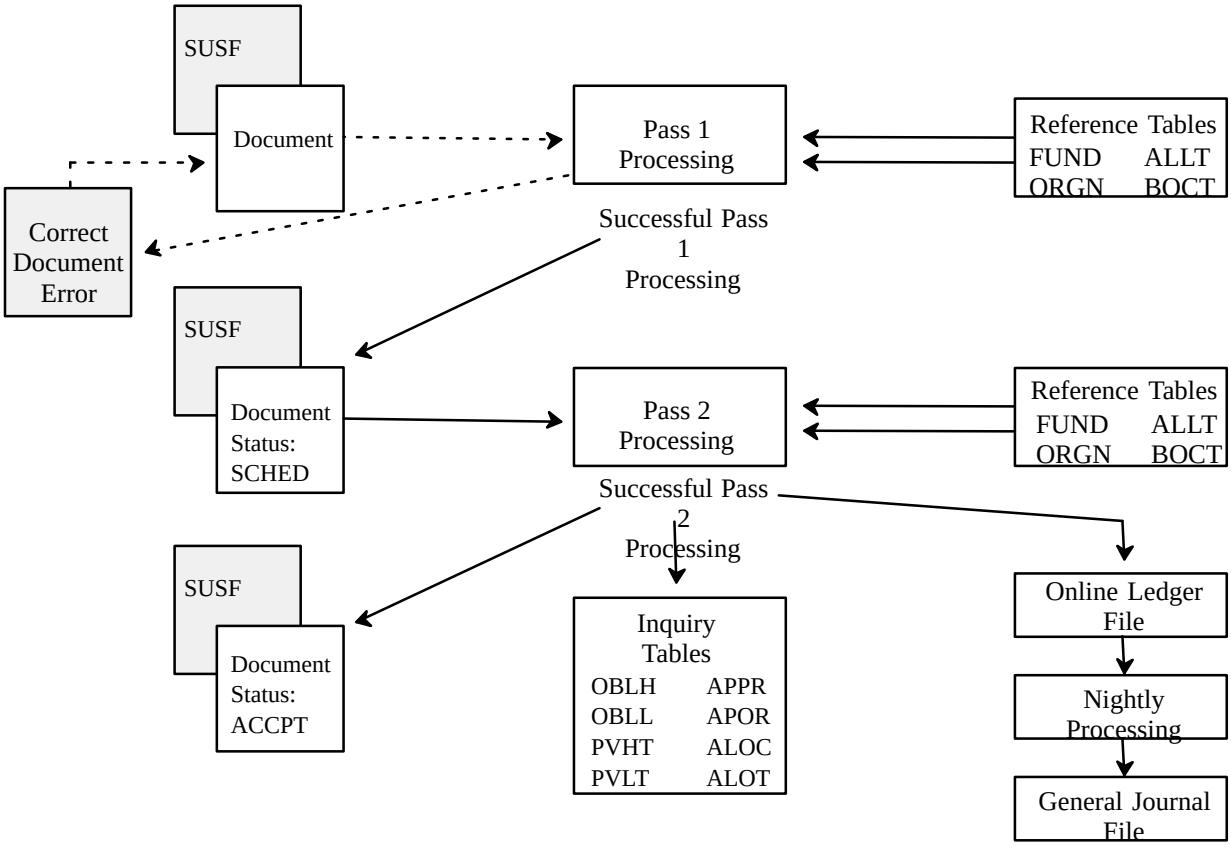

Figure 2:17. Document processing *(example)*

- Reduces/restores the available budgets by entry amount.
- Stores the document ID with a status of ACCPT (accepted) in the Document Suspense File.
- Posts the data captured on the document to journal files and inquiry tables.

Additional updates may occur, depending on the type of document, the information entered, and the system option settings.

Error Message Research Instructions

If error messages are displayed:

- Use the down arrow key to move to the error message and press [Enter]. The Error Guide Inquiry Table (ERRG) is displayed.
- Read the error explanation and follow any instructions provided.
- To return to the document, key in ***E*** in the Action field at any table screen.

Rejected Transactions With An Override Error

Users that have override authority can key in ***O*** at the Command field and press [Enter] to override an error ending in ***O***. If a user does not have override authority, they must contact their designated agency point of contact for assistance with the rejected transaction. NFC personnel are not authorized to apply overrides.

Interpreting FFIS Error Codes

All FFIS error messages are preceded by a seven or eight-digit code. Each code identifies where the error may be found, what type of error was found, and possible solutions from the ERRG. The last position of the message code indicates the type of message. The following charts provide the keys to interpreting an FFIS error code.

First Character	Error Location	Example
A	General Application/System Message	**A**-CQ93
H	Document Header Error	**H**-CV9AE-INVALID DOCU...
B	Batch Header Error	**B**-CD02E-INVALID CURR...
#	Line Number Error	**01**-SC03W-INSUFFICIENT...

Figure 2:18. FFIS Error Location Codes

Last Character	Error Type	Example
#	General	Reports the status of the document. No action required by the user. Example: (A-CQ9**3**)
W	Warning	FFIS will process the document. Example: (01-SC03**W**)
O	Overrideable	Authorized user must apply an override. Example: (01-SC03**O**)
E	Fatal	Error must be corrected in order to process. Example: (01-CE21**E**)

Figure 2:19. FFIS Error Type Codes

Using The Document Suspense File

The document suspense file stores and maintains all documents entered in FFIS (*integrated, interfaced, and FFIS-generated documents*) until they are archived. This file also provides status information on transactions to identify if the document was accepted, rejected, held, awaiting approval, or deleted. The document suspense file displays a maximum of **14** document lines per screen. Documents that fail to pass system edits reject to the file, where they remain until corrected or approved. Documents placed in a *Held* status reside on the file until action is completed by the RD user.

Once entered, any document not archived can be viewed online using the document suspense file, regardless of its status. Successfully processed documents and documents deleted prior to acceptance by FFIS remain on the document suspense file until archived. The RD Functional Administrator determines the number of days that documents stay on the document suspense file before they are archived (i.e., 3 days for RD). Once an accepted document's transaction date reaches the set number of days, it is archived.

The document suspense file consists of two screens: Document Suspense Index 1 (SUSF) and Document Suspense Index 2 (SUS2). A few minor physical differences exist between the two screens. The SUS2 has an Entry Date field which displays the date the transaction was originally created but does not have a Process Date field as shown on the SUSF. Therefore, users cannot use the *Change* function to change the scheduled process date on the SUS2. This function is only allowed on the SUSF. Additionally, the SUSF has a Last User field, while the SUS2 shows a Last Terminal field. Changes performed at the SUSF automatically update the SUS2.

With the document suspense file, you can retrieve existing batch or document ID's or create new batch or document ID(s). After retrieving or creating a batch or document ID, you may then access the document to add, modify, or change data.

The SUSF (see **Figure 2:20**) operates according to the function entered in the Function field. Following is a brief description of each function.

1 Access. Used to access an accepted document or batch to be viewed or changed by keying ***X*** in Sel (**Field 6**). This function retrieves the document in the change mode if the document has not yet gone through PASS2 processing.

2 Approve. Used to apply user approval authority to all selected documents or batches.

3 Change. Used to update the process date of the selected document or batch to the value entered in the Process Date (**Field 17**).

4 Copy. Used to enter data on a new document by *copying* data from an existing document. The DocID field on the key specification area (i.e., *Line 00 in Figure 2:10)* must be completed and one document must be selected from the display lines (Lines 01–14) on this table. Note:This function is helpful when a large amount of data from an existing document is the same for a new document. By copying the existing document, you can save keystrokes.

5 Delete. Used to mark selected batches or documents for deletion (if no reference document exists).

6 Free. Used to free a document marked *in use* (i.e., a ? in the Sel field). A document is marked in use if the system crashes or time outs while the document or batch is active, even though no one is using the document.

7 Hold. Used to change the status to *Held.*

8 New. Used to enter data on a new batch or document. The key specification area (Line 00) must be completed.

9 Override. Used to apply the user's override authority to all selected documents.

10 Run. Used to process a single document or batch through *PASS2.* Only one batch or document may be selected at a time.

11 Scan. Used to display a document for viewing only. No changes may be made to the document. Only one batch or document at a time (*by transaction code*) may be selected to scan. When scanning, records are displayed starting from the point specified.

12 Schedule. Used to change the status of all selected batches or documents to *Sched*.

13 Unapprove. Used to remove the user's approval authority from all selected documents and batches.

14 Undelete. Used to change the status of all selected batches and documents on the SUSF which were previously marked for deletion.

Document Suspense Index 1 (SUSF)

To access the SUSF, at the FFS screen, key in ***N*** at the Action field and ***SUSF*** at the TableID field, then press [Enter]. The SUSF screen (**Figure 2:20**) is displayed with an ***S*** in the Action field.

The fields on the SUSF are listed below with an explanation of each. Processing functions are discussed immediately following the field descriptions.

[1] **Action.** Used to perform one of the following action commands to execute a certain action.

Action	Description
N	Used to leaf to another table or to blank out the fields on the current table.
S	Used to access a record in a table when only a portion of the table key is known.
R	Used to refill the table with the next sequential record(s). The ***R*** action automatically appears in the Action field after an S action is performed.
G	Used to get a specific record when all the table key fields are entered.
E	Used to exit SUSF.

For additional action codes not listed above, see **Using Tables**.

[2] **Screen.** Displays ***SUSF***.

[3] **UserID**. Displays the first 4 characters of the individual's user identification number.

[4] **Function**. Used to enter the applicable function which designates the activity (i.e., *copy, delete, etc.*). Each function is described on the preceding page.

[5] **Sec2.** The system generates the security inferred from your user ID verifying your authority to access and perform processing in the SUSF. This data is not displayed.

[6] **Sel (00–14)**. Line 00 is used to enter data to scan for existing ID's or to create new document identifications. Lines 01–14 are used to select an existing document.

Batch ID

Fields **7** through **9** are used to create a new or modified batch. Each batch ID is comprised of three elements: a transaction code, sec1 code, and document number.

[7] **Tran**. Line 00 is used to enter the transaction code to create a new or modification document **or** to retrieve an existing batch of documents. Lines 01–14 display existing batch transaction codes, if available.

```
ACTION: S [1]   SCREEN: SUSF [2]   USERID: NFxx [3]   DOCUMENT SUSPENSE INDEX 1
FUNCTION: [4]                                         SEC2: [5]

        ----BATCH ID---- -----DOCUMENT ID------                LAST  LAST PROCESS
    SEL TRAN SEC1 NUMBER TRAN SEC1    NUMBER    STAT  APPRV  DATE  USER  DATE
     _  ____ ____ ______ ____ ____ ____________ _____ _____ ______ ____ ______
00- [6] [7]  [8]  [9]   [10] [11]      [12]      [13]  [14]   [15]  [16]  [17]
01-     .    .    .
02-     .    .    .
03-     .    .    .
04-     .    .    .
05-     .    .    .
06-     .    .    .
07-     .    .    .
08-     .    .    .
09-     .    .    .
10-     .    .    .
11-     .    .    .
12-     .    .    .
13-     .    .    .
14-     .    .    .
```

Figure 2:20. Document Suspense Index 1 (SUSF)

[8] **Sec1**. Line 00 is used to enter the sec1 code to create a new or modification document **or** to retrieve an existing batch of documents. Lines 01–14 display existing batch sec1 codes, if available.

[9] **Number**. Line 00 is used to enter the number to create a new or modification document or to retrieve an existing batch of documents. Lines 01–14 display existing batch numbers, if available.

Document ID

Fields **10** through **12** are used to create a new or modification document. Each document ID is comprised of three elements: a transaction code, sec1, and document number.

Note: When scanning for an existing document, you must enter at least one field of the document ID.

[10] **Tran**. Line 00 is used to enter the transaction code to create a new or modification document **or** to retrieve an existing document. Lines 01–14 display existing document transaction codes.

[11] **Sec1**. Line 00 is used to enter the sec1 code to create a new or modification document **or** to retrieve an existing document. Lines 01–14 display existing document sec1 codes.

[12] **Number**. Line 00 is used to enter the number to create a new or modification document **or** to retrieve an existing document. Lines 01–14 display existing document numbers.

[13] **Stat**. Line 00 is used to enter a 5-character code to retrieve a document or batch with a particular status. This code identifies the current status of a document or batch. FFIS processes documents in two steps or passes: an edit pass (PASS1) and an update (PASS2). The following statuses are displayed depending on which pass the document/batch has been processed.

1. Accpt. Displayed when the document has been accepted through PASS2. The data entered on the document has updated the tables.

2. Bheld. Displayed when the document is neither deleted nor accepted and is part of a batch that has been held.

3. Brjct. Displayed when a document within a batch was rejected during PASS2 processing .

4. Bschd. Displayed when the document is neither deleted nor accepted and is part of a batch that has been scheduled for offline processing.

5. Delet. Displayed when a document or batch had been marked for deletion. It can no longer be accessed online.

6. Held. Displayed when a batch or document is on hold. The document or batch of documents may not have been processed through PASS1 and is not processed further until otherwise scheduled until the user processes it.

7. Pend#. Displayed when the document has been processed and awaiting approval(s) (e.g., Pend1 means the document is awaiting for a level 1 approval).

8. Rejct. Displayed when a document was rejected. The document has errors and cannot be accepted until the errors are corrected.

9. Sched. Displayed when a document or batch is scheduled for offline processing.

[14] **Apprv**. The system generates the type of approval that is required for the document. Each of the five characters represent a different level of the approval status. The first character represents the first approval level and so on (e.g., YYA00). Each position may have one of four possible values as follows:

Y = Approval applied

N = Approval removed

A = Approval required but not yet applied

0 = No approval required

[15] **Last Date**. The system generates the last date (*mmddyy*) that any activity or change occurred against the document.

[16] **Last User**. The system generates the user ID of the last user that performed any activity or change against the document.

[17] **Process Date**. The system generates a process date (*yymmdd*) for each batch and/or document. Updates to this field are only valid when the *Change* function is entered.

The following information provides instructions on how to access/retrieve documents using the various functions in the SUSF.

Note: The Apprv, Last Date, and Last User fields (Fields 14 through 16) are protected and will not allow any data entry. Therefore, the system bypasses these fields on Line 00.

Accessing A Document. To view, update, delete, undelete, approve, unapprove, or change a document, at the SUSF screen (see **Figure 2:20**), complete the fields as follows:

Table Action Line

[1] **Action** *(no-entry)*. Displays an ***S***. Press [Tab] to move the cursor to the Function field.

2 **Screen** *(no-entry)*. Displays ***SUSF***.

3 **UserID** *(no-entry)*. Displays the first 4 characters of the individual's user ID.

4 **Function** *(conditional, alpha field; 6 positions)*. If the document is known, key in ***Access*** and follow the instructions under method 1 below. If the DocID is not known, leave this field blank and follow the instructions under method 2.

There are two methods to access a document at SUSF.

Method 1: Key in ***Access*** in the Function field. Press [Tab] to Line 00 and complete **Fields 10–12** under Document ID. Press [Enter]. The document is displayed.

Method 2: If the Doc ID is not known, press [Enter] until the desired document line is displayed. To minimize scanning, you may key in information about the type of document you want to access in any of the following combinations: (1) Tran; (2) Tran and Sec1; (3) Tran, Sec1, Stat; (4) Tran and Stat; (5) Stat. For example: If you want to access rejected PVs, key in PV on Line 00 under Tran and ***Rejct*** under Stat. Press [Enter] until the desired document line is displayed. After the desired document line is displayed, with an S in the Action field, place the cursor anywhere on the document line and press [Enter]. The document is displayed.

- To exit the system, follow the sign-off instructions under **Accessing The System**.

Adding A New Document. To add a new document, at the SUSF screen (see **Figure 2:20**), complete the fields as follows:

Table Action Line

1 **Action** *(no-entry)*. Displays an ***S***. Press [Tab] to move the cursor to the Function field.

2 **Screen** *(no-entry)*. Displays ***SUSF***.

3 **UserID** *(no-entry)*. Displays the first 4 characters of the individual's user ID.

4 **Function** *(required, alpha field; 3 positions)*. Key in ***New.*** Press [Tab] to move the cursor to the Tran field, Line 00 under Document ID.

5 **Sec2** *(no-entry)*. This data is system generated based on the security inferred from the user ID.

6 **Batch ID:Sel 00** *(no-entry)*. Leave blank.

7 **Batch ID:Line 00 Tran** *(no-entry)*. Leave blank. This field is used only when modifying a batch or document.

8 **Batch ID:Line 00 Sec1** *(no-entry)*. Leave blank. This field is used when modifying a batch or document.

9 **Batch ID:Line 00 Number** *(no-entry)*. Leave blank. This field is used only when modifying a batch or document.

10 **Document ID:Tran** *(required, alpha field; 2 positions)*. Key in the transaction code for the new document (i.e., *PV*).

11 **Document ID: Line 00 Sec1** *(required, alphanumeric field; max. of 4 positions)*. Key in the sec1 code.

12 **Document ID: Line 00 Number** *(required, alphanumeric field; max. of 11 positions)*. Key in a document number.

13 **Stat** (*no-entry*). Leave blank.

17 **Process Date** (*no-entry*). Leave blank.

Press [Enter]. The document screen is displayed. Follow the steps below to add the document.

1. Complete the fields according to instructions for the specific document provided in the appropriate part of the procedure.

2. After completing the data, key in ***E*** (edit) in the Command field to edit and press [Enter]. If the data does not pass system edits, error messages are displayed at the bottom of the screen. For more information about error messages and correcting errors, see **System Edits**.

3. After the data passes system edits, key in ***R*** (run) at the Command field and press [Enter] to process. The message *All Lines Added* is displayed at the bottom of the screen.

- To add another document of the same type, key in ***New*** at the Command field and repeat the above process.
- To add a document of a different type, exit to the FFS screen and repeat the above process.
- To exit the system, follow the sign-off instructions under **Accessing The System**.

Creating A Modification Document. At the SUSF screen (see **Figure 2:20**), complete the fields as follows:

Table Action Line

1 **Action** *(no-entry)*. Displays an ***S***. Press [Tab] to the Function field.

2 **Screen** *(no-entry)*. Displays ***SUSF***.

[3] **UserID** *(no-entry)*. Displays the first 4 characters of the individual's user ID.

[4] **Function** *(required, alpha field; 3 positions)*. Key in ***New***. Press [Tab] to the Tran field.

[5] **Sec2** *(no-entry)*. This data is system generated based on the security inferred from the user ID.

[6] **Batch ID:Sel 00** *(no-entry)*. Leave blank.

[7] **Batch ID:Line 00 Tran** *(required, alpha field; 2 positions)*. Key in the Batch ID transaction code for the type of modification document to create, e.g., MO.

[8] **Batch ID:Line 00 Sec1** *(required, alphanumeric field; max. of 4 positions)*. Key in the sec1 code.

[9] **Batch ID:Line 00 Number** *(required, alphanumeric field; max. of 6 positions)*. Key in a desired batch number.

[10] **Document ID:Line 00 Tran** *(required, alpha field; 2 positions)*. Key in the transaction code for the existing document to be modified.

[11] **Document ID:Line 00 Sec1** *(required, alphanumeric field; max. of 4 positions)*. Key in the sec1 code for the existing document to be modified.

[12] **Document ID:Line 00 Number** *(required, alphanumeric field; max. of 11 positions)*. Key in the document number of the existing document to be modified.

Press [Enter]. The batch ticket screen is displayed with data specific to the newly created modification document. Press [Enter]. The document is displayed.

- To exit the system, follow the sign-off instructions under **Accessing The System**.

Approving Or Unapproving A Document. To approve or unapprove a document, you must first display the applicable document ID on SUSF. See **Accessing A Document**. Complete the fields as follows:

Table Action Line

[1] **Action** *(no-entry)*. Displays an ***S***. Press [Tab] to the Function field.

[2] **Screen** *(no-entry)*. Displays ***SUSF***.

[3] **UserID** *(no-entry)*. Displays the first 4 characters of the individual's user ID.

[4] **Function** *(required, alpha field; max. of 9 positions)*. Key in one of the following values:

Approve

Unapprove

Tab to the line to be approved or unapproved and place ***X*** in the Sel field. Press [Enter]. The applicable message is displayed and the document status is changed to scheduled if approving the document **or** pending if the document is unapproved.

- To exit the system, follow the sign-off instructions under **Accessing The System**.

Changing A Process Date. To change a process date, you must first display the applicable document ID in SUSF. See **Accessing A Document**. Complete the fields as follows:

Table Action Line

[1] **Action** *(required, alpha field; 1 position)*. If ***R*** is system generated, key in an ***S***. Press [Tab] to the Function field.

[2] **Screen** *(no-entry)*. Displays ***SUSF***.

[3] **UserID** *(no-entry)*. Displays the first 4 characters of the individual's user ID.

[4] **Function** *(required, alpha field; 6 positions)*. Key in ***Change***.

Tab to the line of the document to be changed and place ***X*** in the Sel field. Press [Tab] to the Process Date field and key in the desired date *(yymmdd)*, which must be a future date. Press [Enter]. The date has been changed to the date indicated.

- To exit the system, follow the sign-off instructions under **Accessing The System**.

Copying A Document. To copy a document, you must first display the applicable document ID in SUSF for the document to be copied. See **Accessing The System**.

Caution: The Copy function can be useful to you in eliminating unnecessary data entry for documents which contain much of the same data. However, you are cautioned to make sure that all copied documents are thoroughly reviewed before executing the PASS2 processing**.**

Once the document ID is retrieved, complete the fields as follows:

Table Action Line

[1] **Action** *(required, alpha field; 1 position)*. If ***R*** is system generated, key in an ***S***. Press [Tab] to the Function field.

[2] **Screen** *(no-entry)*. Displays ***SUSF***.

[3] **UserID** *(no-entry)*. Displays the first 4 characters of the individual's user ID.

4 **Function** *(required, alpha field;4 positions)*. Key in ***Copy.*** Press [Tab] to Tran.

5 **Sec2** *(no-entry)*. This data is system generated based on the security inferred from the user ID.

6 **Batch ID:Sel 00** *(no-entry)*. Leave blank.

7 **Batch ID:Line 00 Tran** *(no-entry)*. Leave blank. This field is used only when modifying a batch or document.

8 **Batch ID:Line 00 Sec1** *(no-entry)*. Leave blank. This field is used only when modifying a batch or document.

9 **Batch ID:Line 00 Number** *(no-entry)*. Leave blank. This field is used only when modifying a batch or document.

10 **Document ID:Line 00 Tran** *(required, alpha field; 2 positions)*. Key in the transaction code.

11 **Document ID:Line 00 Sec1** *(required, alphanumeric field; max. of 4 positions)*. Key in the sec1 code.

12 **Document ID: Line 00 Number** *(required, alphanumeric field; max. of 11 positions)*. Key in a document number.

Press [Tab] to the line to be copied and place ***X*** in the Sel field. Press [Enter]. The new document is displayed. Make the applicable changes. See **Using Documents**.

- To exit the system, follow the sign-off instructions under **Accessing The System**.

Deleting Or Undeleting A Document. To delete or undelete a document, you must first display the applicable document ID on the SUSF. See **Accessing A Document**. Complete the fields as follows:

Table Action Line

1 **Action** *(required, alpha field; 1 position)*. If ***R*** is system generated, key in ***S***. Press [Tab] to the Function field.

2 **Screen** *(no-entry)*. Displays ***SUSF***.

3 **UserID** *(no-entry)*. Displays the first 4 characters of the individual's user ID.

4 **Function** *(required, alpha field; max. of 8 positions)*. Key in one of the following values:

Delete

Undelete

Press [Tab] to the document line to be deleted or undeleted and key in ***X*** at the Sel field. Press [Enter]. The document is marked for deletion or undeletion as specified.

- To exit the system, follow the sign-off instructions under **Accessing The System**.

Freeing A Document. To free a document marked *in use* (i.e., a ? in the Sel column field), you must first display the applicable document ID in SUSF. See **Accessing A Document**. Complete the fields as follows:

Table Action Line

1 **Action** *(required, alpha field; 1 position)*. If ***R*** is system generated, key in an ***S***. Press [Tab] to the Function field.

2 **Screen** *(no-entry)*. Displays ***SUSF***.

3 **UserID** *(no-entry)*. Displays the first 4 characters of the individual's user ID.

4 **Function** *(required, alpha field; 3 positions)*. Key in ***Free***.

Press [Tab] to the line which displays the document to be retrieved. Press [Enter]. The document is unlocked and ready for use.

- To exit the system, follow the sign-off instructions under **Accessing The System**.

Holding A Document. To place a document on hold, you must first display the applicable document ID in the SUSF. See **Accessing A Document**. Complete the fields as follows:

Table Action Line

1 **Action** *(required, alpha field; 1 position)*. If ***R*** is system generated, key in an ***S***. Press [Tab] to the Function field.

2 **Screen** *(no-entry)*. Displays ***SUSF***.

3 **UserID** *(no-entry)*. Displays the first 4 characters of the individual's user ID.

4 **Function** *(required, alpha field; 4 positions)*. Key in ***Hold***.

Press [Tab] to the line of the document to be held. Key in ***X*** at the Sel field and press [Enter]. The document is held. Note: You cannot perform the Hold function on accepted or deleted documents.

- To exit the system, follow the sign-off instructions under **Accessing The System**.

Processing A Document To Run. To process a document that has completed PASS1 to process to PASS2, you must first display the applicable document ID in the SUSF. See **Accessing A Document**. Complete the fields as follows:

Table Action Line

1 **Action** *(required, alpha field; 1 position)*. If ***R*** is system generated, key in an ***S***. Press [Tab] to the Function field.

2 **Screen** *(no-entry)*. Displays ***SUSF***.

3 **UserID** *(no-entry)*. Displays the first 4 characters of the individual's user ID.

4 **Function** *(required, alpha field; 3 positions)*. Key in ***Run***.

Press [Tab] to the document line you desire to run and key in ***X*** at the Sel field. Press [Enter]. If no errors, the document has been processed to complete PASS2. Note: Only one document may be processed at a time. If the document has no errors and approvals are not required, it is accepted and all related tables are updated. If errors are detected, the document is displayed with the applicable error correction. If approvals are required, the message *"Bat/Doc Requires Approvals"* is displayed and the status is changed to pending.

- To exit the system, follow the sign-off instructions under **Accessing The System**.

Scanning A Document. To scan a document, you must first display the applicable document ID in the SUSF. See **Accessing A Document**. Complete the fields as follows.

Table Action Line

1 **Action** *(required, alpha field; 1 position)*. If ***R*** is system generated, key in an ***S***. Press [Tab] to the Function field.

2 **Screen** *(no-entry)*. Displays ***SUSF***.

3 **UserID** *(no-entry)*. Displays the first 4 characters of the individual's user ID.

4 **Function** *(required, alpha field; 4 positions)*. Key in ***Scan***.

Press [Tab] to the document line to be scanned, retrieved and key in ***X*** at the Sel field. Press [Enter]. The selected document is displayed. Note: The document is for viewing only; therefore, no changes may be made to the document.

- To exit the system, follow the sign-off instructions under **Accessing The System**.

Scheduling A Document For Overnight Processing. To schedule a document with a status of *Held* or *Bheld* for processing, you must first display the applicable document ID in the SUSF. See **Accessing A Document**. Note: You may select multiple documents to process at a time. Complete the fields as follows.

Table Action Line

1 **Action** *(required, alpha field; 1 position)*. If ***R*** is system generated, key in an ***S***. Press [Tab] to the Function field.

2 **Screen** *(no-entry)*. Displays ***SUSF***.

3 **UserID** *(no-entry)*. Displays the first 4 characters of the individual's user ID.

4 **Function** *(required, alpha field; 8 positions)*. Key in ***Schedule***.

Press [Tab] to the document line to be retrieved and key in ***X*** at the Sel field. Continue to select each document for processing by placing an ***X*** on each applicable line. When completed, press [Enter]. The document(s) have been scheduled for overnight processing. The message *"Doc Scheduled For Offline"* is displayed.

Document Suspense Index 2 (SUS2)

To access SUS2, at the FFS screen, key in an ***N*** at the Action field and ***SUS2*** at the TableID field, then press [Enter]. The SUS2 screen (**Figure 2:21**) is displayed with ***S*** in the Action field.

For descriptions of Fields [1] through [14] and instructions on processing documents in the SUS2, see the appropriate instructions under **Document Suspense Index 1 (SUSF)**. The last two fields on the SUS2 are listed below with an explanation of each.

[15] **Entry Date.** The system generates the date (*yymmdd*) that the document was entered. See the DATE for the current date.

[16] **Last Terminal.** The system generates the number of the terminal (port) where the last activity or change against the document was performed.

```
ACTION:[1] SCREEN: [2]  USERID: [3]                DOCUMENT SUSPENSE INDEX 2
FUNCTION:[4]                                       SEC2: [5]

        ----BATCH ID---- -----DOCUMENT ID------                ENTRY  LAST
    SEL TRAN SEC1 NUMBER TRAN SEC1    NUMBER     STAT  APPRV  DATE  TERMINAL
    _ ---- ---- ------ ---- ---- ------------  ----- ----- ------ ---------
00- [6]  [7]  [8]   [9]  [10] [11]     [12]      [13]   [14]  [15]    [16]
01-     .    .     .
02-     .    .     .
03-     .    .     .
04-     .    .     .
05-     .    .     .
06-     .    .     .
07-     .    .     .
08-     .    .     .
09-     .    .     .
10-     .    .     .
11-     .    .     .
12-     .    .     .
13-     .    .     .
14-     .    .     .
```

Figure 2:21. Suspense Index 2 (SUS2)

PART 3.

BUDGET AND FUNDS CONTROL

Budget And Funds Control Overview **3:3**
Funds Distribution And Spending Controls 3:3
Budget Structure 3:3
Fund Categories 3:4
Budget Responsibilities 3:4
Budgetary Authority 3:4

Budget And Funds Control Documents **3:7**
Appropriation And Apportionment (AA) 3:8
Apportionment Approval Document (PA) 3:11
Budget Execution Document (Allocation) (BE) 3:13
Budget Execution Document (Allotment) (BL) 3:16
Suballotment Document (SA) 3:19

Budget And Funds Control Overview

The Budget and Funds Control function is used to establish unique budget structures for individual appropriations, automatically check available funds to prohibit overspending when needed, adjust budget ceilings throughout the year, and view the current status of funds.

Funds Distribution And Spending Controls

FFIS supports multiple levels of funds distribution through the use of budget levels and budget dimensions. It allows for the management of spending at each budget level within a fund. Below is a brief description of budget levels, budget dimensions, and spending controls.

Budget Levels. Budget levels are a way of separating a fund into smaller portions. RD uses five budget levels: appropriation, apportionment, allocation, allotment, and suballotment. Federal reporting requirements for appropriated funds specify that you must use the appropriation and apportionment levels. All other levels are defined by RD. Refer to **Part 9, Appendix H**, Rural Development FFIS Processing Matrix for Budget.

You may view the status of budgeted dollar amounts by budget fiscal year and fiscal year through the Budget Execution Inquiry tables for each budget level.

Budget Dimensions. Budget levels are defined by selected budget dimensions. Budget dimensions are codes that represent how funds are distributed to a particular budget level and are a subset of the Accounting Classification Code Structure (ACCS), which is described in **Part 1, Introduction**. Using ACCS budget dimensions, funds can be distributed within RD based on the following:

- **Budget Fiscal Year**. The fiscal year(s) for which an appropriation is active
- **Fund**. The appropriation received from Congress as defined by RD
- **Division**. Highest Organizational level within an Agency
- **Budget/Cost Organization**. Organizations within the Divisions of an Agency
- **Budget Object Class (BOC)**. Objects, on which an Agency spends funds

Spending Controls. Spending controls define how FFIS manages the processing of a spending document against a budget line. Spending controls for the appropriation, apportionment, allocation, and allotment levels are defined in the Fund Options Reference Table (FUN2). The suballotment options are defined on the Suballotment Options Inquiry Table (SAOP). Different spending controls can be specified at each budget level within a fund. In addition, spending controls can vary from fund to fund. Spending is tracked and controlled at each point; commitment, obligation, and expenditure amounts are checked; and spending in excess of available budget authority at each budget level can be prohibited.

The four levels of control for spending documents are described below:

Full Control (C) *(absolute control)*. Indicates that the budget line(s) the document references must exist in the Budget Execution tables (i.e., the budget line must be pre-established) and the document amount must not exceed available funds.

Presence Control (P) *(advisory control)*. Indicates that before the document is accepted, regardless of the availability of funds, the budget line the document references must exist in the Budget Execution tables.

No Control (N). Indicates that funds do not have to be available for a document to be processed. Instead, if the budget line does not exist, this option creates the budget line during processing of the transaction.

Ignore (I). Indicates that a specific budget level is not being used.

Spending can also be controlled by deactivating a budget line. Once a budget line is deactivated (or inactive), no further spending can be made against the budget line. This means that expenditures can be processed against existing obligations, but no new obligations can occur. Since budget lines can be reactivated at any time, budget line deactivation is a good way to freeze spending for short periods of time.

Budget Structure

RD records appropriations and apportionments at the the Budget Fiscal Year and Fund code level. RD allocates funds to all divisions using the budget dimensions Budget Fiscal Year/Fund/Division. The divisions will then allot funds to Organization 1. The allotment uses budget dimensions Budget Fiscal Year/Fund/Division/Organization 1, with State Offices also using BOC rollup codes. The funds can be suballotted to Organization 2 for State Offices by BOC rollup code and to Organizations 2, 3, and 4 by rollup code for Headquarters allottees. **Figure 3:1**,**Figure 3:2** and,**Figure 3:3** outline RD budget levels, budget dimensions, and spending controls.

Budget Level	Dimensions	Spending Control
Appropriation/ Apportionment	BFY, Fund	Full
Allocation	BFY, Fund, Div	Full

Figure 3:1. National Office Budget Staff Budget Structure

Budget Level	Dimensions	Spending Control
Allotment	BFY, Fund, Div, Org1	Presence
Suballotment	BFY, Fund, Div, Org 2, 3 or 4, BOC rollup code	No

Figure 3:2. Headquarters Allottees Budget Structure

Budget Level	Dimensions	Spending Control
Allotment	BFY, Fund, Div, Org1, BOC rollup code	Presence
Suballotment	BFY, Fund, Div, Org 2, BOC rollup code	No

Figure 3:3. State Offices Budget Structure

Fund Categories

The fund category is used to determine different general ledger postings based on the fund code entered on an FFIS document.

The Fund Reference Table (FUND) is used to define codes for all funds used in the system and to group similar funds together. The fund codes identify RD appropriations or a breakdown of appropriations; for example , distinct fund codes are used to separate appropriated authority (general funds) from reimbursable authority within the same Treasury symbol. For each Fund code, the following elements must be defined on the FUND.

- Fund Type (budget category)
- No–Year Indicator
- Fund name
- Treasury symbol
- Carryover indicator
- Fund category
- Agency
- Agency name

Budget Responsibilities

The accurate entry of budget lines at all levels is critical to RD's overall success in effectively controlling funds. One method to assure that success is by clearly defining the area of responsibilities. **Figure 3:4** identifies the RD organizations responsible for entering budget line items at the different budget levels used.

Agency Terms	Responsible Organization
Appropriation	RD Budget Staff
Apportionment	RD Budget Staff
Allocation	RD Budget Staff
Allotment	Headquarters Allottees/State Offices
Suballotment	Headquarters/State Offices

Figure 3:4. Level of Responsibility

Budgetary Authority

The Budgetary authority for RD is as follows: Appropriation/apportionment budgetary authority, allocation budgetary authority, allotment budgetary authority, and the suballotment budgetary authority.

Instructions for entering and tracking appropriate documents in FFIS at each budgetary authority are provided as follows:

Appropriation/Apportionment Budgetary Authority

Once RD receives the appropriation from Congress, RD submits a request for the apportionment to OMB. This budget level is required for every fund. Apportionment is the distribution made by the OMB of amounts available for obligation or expenditure under an agency's appropriation.

SF–132 Transactions. SF–132, Apportionment and Reapportionment Schedule, transactions are entered on the Appropriation and Apportionment Document (AA) and subsequently approved on the Apportionment Approval Document (PA).

SF–1151 Transactions. SF–1151, Non-Expenditure Transfer Authorization, transactions are entered on the Appropriation and Apportionment Document (AA) and subsequently approved on the Apportionment Approval Document (PA).

Appropriation and Apportionment Document. The AA (see **Figure 3:5**) is used to record appropriations, pending amounts, and estimated reimbursements. The AA is also used to issue a transfer and distribute carryover amounts.

The amount entered on the AA updates the pending amounts on the online inquiry tables; however, the money is not available for spending until the money is approved and posted using the PA.

Apportionment Approval Document. PA (see **Figure 3:6**) is used to approve and post pending apportionments. The total approved amount for all apportionment periods cannot exceed the net appropriation amount. This document updates the online inquiry tables. Once amounts are posted, they are available for spending. You may also reject pending amounts (i.e., not approve them) on a PA as well. If you reject the pending amounts, the pending amounts are cleared from the budget tables.

Tables Updated by the AA and the PA

The results of the AA and the PA are shown on the following tables:

- **Appropriation Inquiry Table (APPR)**. Displays the status of an appropriation.
- **Apportionment Inquiry Table (APOR)**. Displays information about the status of apportionment.
- **Fiscal Year Appropriation Inquiry Table (FAPP)**. Displays information about the status of an appropriation by fiscal year.
- **Fiscal Year Apportionment Inquiry Table (FAPR)**. Displays information about the status of an apportionment by fiscal year.
- **General Ledger Balance Inquiry Table (GLBL)**. Displays general ledger account balances at the summary (fund) level by fiscal year.

Allocation Budgetary Authority

RD divides the apportioned funds among its State Office/Headquarters allottees, giving those State Office/Headquarters allottees the authority to allot their portion of the funds.

Budget Execution Document (Allocation). The BE (see **Figure 3:7**) is used to bypass a pending and approval step by directly distributing and posting fund amounts for the allocation budget levels.

Tables Updated by the BE

The results of the BE are shown on the following tables:

- **APPR**. Displays the status of an appropriation.
- **APOR**. Displays information about the status of apportionment.
- **Allocation Inquiry Table (ALOC)**. Displays the allocation budget level and each budget line.
- **Fiscal Year Allocation Inquiry Table (FALC).** Displays information about allocation accounting distribution, budgeted amounts, and the committed, obligated, and expended amounts by fiscal year.
- **Fiscal Year Allotment Inquiry Table (FALT)**. Displays information about allotment accounting distribution, budgeted amounts, and the committed, obligated, and expended amount by fiscal year.
- **FAPP**. Displays information about the status of an appropriation by fiscal year.
- **FAPR**. Displays information about the status of an apportionment by fiscal year.
- **GLBL**. Displays general ledger account balances at the summary (fund) level by fiscal year.

Allotment Budgetary Authority

State Office/Headquarters allottees take their allocated funds, and subdivide those funds by office, district/area, county, division, branch, etc. Allotments are a specific amount of funds granted by competent authority to commit, obligate, and expend funds for a particular purpose.

Budget Execution Document (Allotment). The BL (see **Figure 3:8**) is used to bypass a pending and approval step by directly distributing and posting fund amounts for the allotment budget levels.

Tables Updated by the BL

The results of the BL are shown on the following tables:

- **APPR**. Displays the status of an appropriation.
- **APOR**. Displays information about the status of apportionment.
- **ALOC**. Displays the allocation budget level and each budget line.
- **Allotment Inquiry Table (ALLT)**. Displays the allotment budget level and each budget line.
- **FALC.** Displays information about allocation accounting distribution, budgeted amounts, and the committed, obligated, and expended amounts by fiscal year.
- **FALT**. Displays information about allotment accounting distribution, budgeted amounts, and the committed, obligated, and expended amount by fiscal year.
- **FAPP**. Displays information about the status of an appropriation by fiscal year.

- **FAPR**. Displays information about the status of an apportionment by fiscal year.
- **GLBL**. Displays general ledger account balances at the summary (fund) level by fiscal year.

Suballotment Budgetary Authority

Suballotments further divide allotted funds.

The suballotment budget level is entered on the Suballotment Document (SA).

Suballotment Document. The SA (see **Figure 3:9**) is used to record and post suballotment amounts for each subunit. FFIS does not require an additional document to approve this budget level.

Tables Updated by the SA

The results of the SA are shown on the following tables:

- **Suballotment Spending Control Table (SASP)**. Displays information about suballotment spending control edits.
- **Suballotment Structure Table (SAST)**. Displays a line for each suballotment in the system.
- **Suballotment Forward Reference Table (SAFR)**. Displays the forward references for each parent allotment and suballotment.
- **ALLT**. Displays the allotment budget level and each budget line.
- **ALST**. Displays a YTD status of budget and spending activity for multiple allotments.
- **Suballotment Table (SAIN)**. Displays each suballotment, indicating where it exists within the suballotment hierarchy. Note: An offline process will be used to populate SAIN based on entry of the SAs
- **GLBL**. Displays general ledger account balances at the summary (fund) level by fiscal year.

Instructions for completing the documents discussed above are provided under **Budget And Funds Control Documents** in this part.

Instructions for the tables discussed above are provided in **Part 8, FFIS Tables**.

For more information on how RD uses FFIS for budget and funds control, see **Part 9, Appendix H, Rural Development FFIS Processing Matrix For Budget**.

Budget And Funds Control Documents

Documents used in the Budget and Funds Control function are briefly described below and are listed in the sequence of entry into FFIS. Instructions for using each document are provided following these descriptions.

Appropriation and Apportionment (AA). Used to record appropriations, pending amounts, and estimated reimbursements. The AA is also used to issue a transfer and distribute carryover amounts.

Apportionment Approval (PA). Used to approve and post the most recent pending apportionment amounts for each applicable fund.

Budget Execution (Allocation) (BE). Used to post year-to-date budget authority directly, without the need to enter pending and approving document. The BE is also used to budget to the allocation levels.

Budget Execution (Allotment) (BL). Used to post year-to-date budget authority directly, without the need to enter pending and approving document. The BL is also used to budget to the allotment levels.

Suballotment Document (SA). Used to enter and post suballotment amounts.

Appropriation And Apportionment (AA)

The AA is used at the National Office, Budget Division to establish all appropriations and pending apportionments in FFIS.

After the AA is processed, you can view the results in the following tables:

- Appropriation Inquiry Table (APPR)
- Apportionment Inquiry Table (APOR)
- Fiscal Year Appropriation Inquiry Table (FAPP)
- Fiscal Year Apportionment Inquiry Table (FAPR)
- General Ledger Balance Inquiry Table (GLBL)

The amount entered on the AA updates the pending amounts on the above online inquiry tables; however, the money is not available for spending until the amount is approved and posted using the approval document (i.e., PA).

To access the AA, at the FFS screen, key in ***L*** at the Action field and press [Tab]. Key in ***AA*** at the TableID field. Use the [Space Bar] to erase the remaining 2 characters. Press [Enter]. The AA screen (**Figure 3:5**) is displayed.

Detailed instructions for adding and changing AAs are described below.

Adding/Changing A Document. Using the SF–132, Apportionment and Reapportionment Schedule, at the AA screen, complete the fields as follows:

Command Fields

[1] **Commnd** *(no-entry)*. ***New*** is system generated. Press [Tab].

[2] **DocID** *(required, alphanumeric field; max. of 15 positions).* At the system-generated transaction code (***AA***), press [Tab]. Key in the sec1 code (i.e., the 2 position division code) and press [Tab]. Key in the Org Code (5-positions). Press [#], then press [Enter]. Sequential numbers are generated in positions 10–15.

After [Enter] is pressed, the cursor appears in the Trans Date field and the Command field changes from ***New*** to a blank field.

[3] **Status** *(no-entry)***.** After the document is processed, this field displays the current status of a document.

[4] **BatID** (*no-entry*). This field is not used for this document.

[5] **Sec2** *(no-entry)***.** The system generates the security code that is inferred from your user ID to verify your authority to create this document. This data is not displayed.

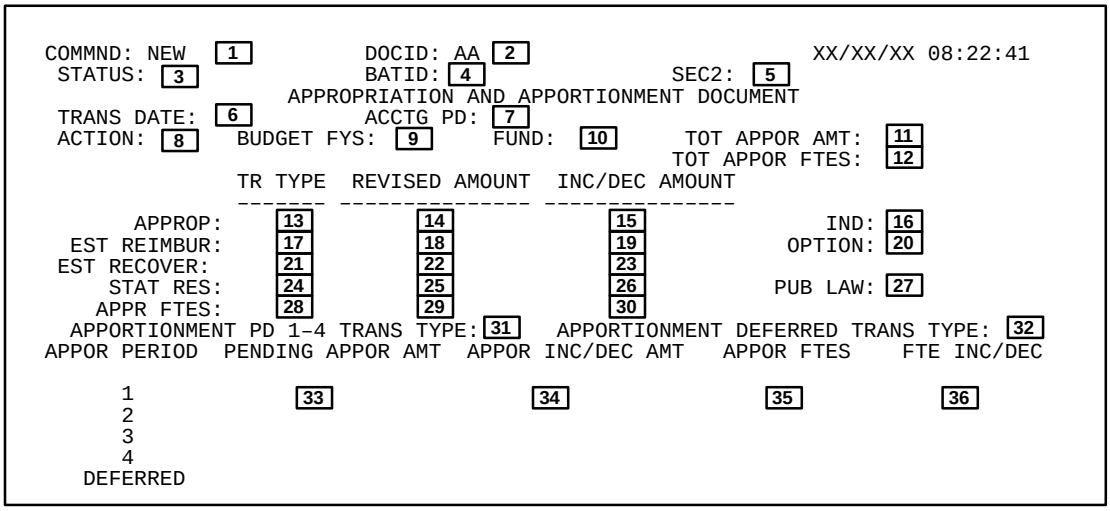

Figure 3:5. Appropriation And Apportionment Document (AA)

Other Fields

[6] **Trans Date** (*optional default, numeric field; 6 positions)*. Key in the date (*mmddyy*) of the document, usually the current date, but never a future date. If left blank, the system defaults to the date the document is accepted by the system. Note: When keying in the date, enter the 2-digit month, press [Tab]; enter the 2-digit date, press [Tab]; enter the 2-digit year and press [Tab].

[7] **Acctg Pd** (*optional default, numeric field; 4 positions)*. Key in the open accounting period date, using the *mm* format, press [Tab] and the *yy* format, press [Tab]. If left blank, the system defaults to the accounting period inferred from the document date in the CLDT, but it is not displayed. Note: The Acctg Pd refers to the fiscal month and year, e.g., November 2000 is 02 01. You cannot enter a future accounting period.

[8] **Action** *(required, alpha field; 1 position)*.

ADD: Key in ***A*** to add a new appropriation or reactivate an inactive appropriation.

CHG: Key in ***C*** to change the appropriation, the estimated receipts option, or the statutory reserve amount, or to add apportionments to an existing appropriation.

[9] **Budget FYs** (*required, numeric field; 2 positions)*. Key in the last 2 digits of the budget fiscal year. See the FSYR for valid fiscal years.

[10] **Fund** (*required, alphanumeric field; max. of 3 positions)***.** Key in the fund code. See the FUND for valid fund codes.

[11] **Tot Appor Amt** (*no-entry)*. Leave blank.

[12] **Tot Appor FTEs** (*no-entry*). This field is not used by RD.

[13] **Approp (Tr Type)** (*required, alphanumeric field; 2 positions)*. Key in the transaction type for the appropriation.

Note: To establish authority for estimated reimbursement, refer to Field 17.

Note: If you enter Transaction Type 02, you must have received a warrant from Treasury. Otherwise, use Transaction Type 01. If you enter Transaction Type 01, you must create an SV to record the Treasury warrant once it is received.

[14] **Approp (Revised Amount)** (*no-entry*). Leave blank.

[15] **Approp (Inc/Dec Amount)** (*required, numeric field; max. of 15 positions)*.

ADD: Key in the new amount (use decimal).

Note: For funds that require a new AA to distribute new authority and carryover, enter only the new authority in this field.

CHG: Key in the amount of the increase or decrease (use decimal).

Note: If recording a negative budget authority, key in a negative sign before the amount.

[16] **Ind** (*optional, alpha field; 1 position)*. Key in one of the following or leave blank to indicate that the change to the appropriation is an adjustment.

- ***L*** =Requested change to the appropriation amount is a lapse
- ***T*** =Requested change to the appropriation is a transfer

[17] **Est Reimbur (Tr Type)** (*optional, alpha field; 2 positions)***.** Key in the transaction type ***RE*** for the estimated reimbursement.

[18] **Est Reimbur (Revised Amount)** (*no-entry)*. Leave blank.

[19] **Est Reimbur (Inc/Dec)** (*conditional, numeric field; max. of 15 positions)*.

ADD: If this fund has estimated reimbursement/collections, key in the new amount (use decimal).

CHG: Key in the amount of the increase or decrease (use decimal).

Note: If recording a negative budget authority, key in a negative sign before the amount.

[20] **Option** *(optional default, alpha field; 1 position*)**.** Key in one of the following. If left blank, the system defaults to ***N***.

- ***N*** =Does not include reimbursements in limiting apportionment YTD budget authority.
- ***E*** =Includes estimated reimbursements.
- ***A*** =Includes actual reimbursements.
- ***L*** =Includes the lesser of actual receipts and estimated receipts.

Note: For reimbursable and trust funds, use *E* to have the system include estimated reimbursements/ receipts in limiting the year-to-date budget authority. For special funds use A to have the system include actual reimbursements in limiting year-to-date budget authority.

Other Fields *(cont'd)*

21 **Est Recover (Tr Type)** (*optional, alphanumeric field; 2 positions)***.** Key in the transaction type for the estimated recovery. See the ACED for valid transaction types.

22 **Est Recover (Revised Amount)** (*no-entry*)**.** Leave blank.

23 **Est Recover (Inc/Dec Amount)** (*optional, numeric field; max. of 15 positions*).

ADD: Key in the new amount (use decimal).

CHG: Key in the amount of the increase or decrease (use decimal).

Note: If recording a negative budget authority, key in a negative sign before the amount.

24 **Stat Res (Tr Type)** (*optional, alphanumeric field; 2 positions)***.** Key in the transaction type for the statutory reserve. See the ACED for valid transaction types.

25 **Stat Res (Revised Amount)** (*no-entry*)**.** Leave blank.

26 **Stat Res (Inc/Dec Amount)** (*optional, numeric field; max. of 15 positions*)**.**

ADD: Key in the new amount (use decimal).

CHG: Key in the amount of the increase or decrease (use decimal).

Note: If recording a negative budget authority, key in a negative sign before the amount.

27 **Pub Law** (*optional, alphanumeric field; max. of 12 positions*)**.** Key in the public law authorizing the appropriation.

28 **Appr FTES Tr Type** (*no-entry*). This field is not used by RD.

29 **Appr FTES (Revised Amount)** (*no-entry*). This field is not used by RD.

30 **Appr FTES (Inc/Dec Amount)** (*no-entry*). This field is not used by RD.

31 **Apportionment Pd 1–4 Trans Type** (*required, alpha field; 2 positions*)**.** Key in the transaction type ***PN*** for apportionment pending.

32 **Apportionment Deferred Trans Type** (*no-entry*). This field is not used by RD.

33 **Pending Appor Amt (1, 2, 3, 4 Deferred)** (*no-entry*). Leave blank.

34 **Appor Inc/Dec Amt (1, 2, 3, 4 Deferred)** (*required, numeric field; max. of 15 positions*).

ADD: Key in the new amount (use decimal) in the first period.

Note: For funds that require a new AA to distribute new authority and carryover, enter the sum of the new authority amount and the carryover amount in this field.

CHG: Key in the amount (use decimal) of the increase or decrease.

Note: If recording a negative budget authority, key in a negative sign before the amount.

35 **Appor FTEs (1, 2, 3, 4 Deferred)** (*no-entry*). This field is not used by RD.

36 **FTE Inc/Dec (1, 2, 3, 4 Deferred)** (*no-entry*). This field is not used by RD.

After Completing The Fields

Follow the steps below to edit and process the data:

1. At the Command field, key in ***E*** (edit).

2. Press [Enter] to edit the data. If errors are detected, error messages are displayed at the bottom of the screen. All fatal errors must be corrected before the database is updated. For more information about error messages and correcting errors, see**Part 2, System Edits.**

3. After the data passes system edits, key in ***R*** (run) at the Command field.

4. Press [Enter]. The document status is displayed.

Performing Other Actions. For general instructions on deactivating and deleting documents, see **Part 2, Using Documents.**

Apportionment Approval Document (PA)

The PA is used at the National Office, Budget Division to approve pending apportionment and make them available for distribution.

After the PA is processed, you can view the results in the following tables:

- Appropriation Inquiry Table (APPR)
- Apportionment Inquiry Table (APOR)
- Fiscal Year Appropriation Inquiry Table (FAPP)
- Fiscal Year Apportionment Inquiry Table (FAPR)
- General Ledger Balance Inquiry Table (GLBL)

To access the PA, at the FFS screen, key in ***L*** at the Action field and press [Tab]. Key in ***PA*** at the TableID field. Use the [Space Bar] to erase the remaining 2 characters. Press [Enter]. The PA screen (**Figure 3:6**) is displayed.

Detailed instructions for approving and rejecting PAs are described below.

Approving/Rejecting A Document. Using the SF–132, Apportionment and Reapportionment Schedule, at the PA screen, complete the fields as follows:

Command Fields

[1] **Commnd** *(no-entry). **New*** is system generated. Press [Tab].

[2] **DocID** *(required, alphanumeric field; max. of 15 positions).* At the system-generated transaction code (***PA***), press [Tab]. Key in the sec1 code (i.e., the 2 position division code) and press [Tab]. Key in the Org Code (5-positions). Press [#], then press [Enter]. Sequential numbers are generated in positions 10–15.

[3] **Status** *(no-entry).* After the document is processed, this field displays the current status of a document.

[4] **BatID** (*no-entry).* This field is not used for this document.

[5] **Sec2** *(no-entry).* The system generates the security code that is inferred from your user ID to verify your authority to create this document. This data is not displayed.

Other Fields

[6] **Trans Date** (*optional default, numeric field; 6 positions).* Key in the date (*mmddyy*) of the document, usually the current date, but never a future date. If left blank, the system defaults to the date the document is accepted by the system. Note: When keying in the date, enter the 2-digit month, press [Tab]; enter the 2-digit date, press [Tab]; enter the 2-digit year and press [Tab].

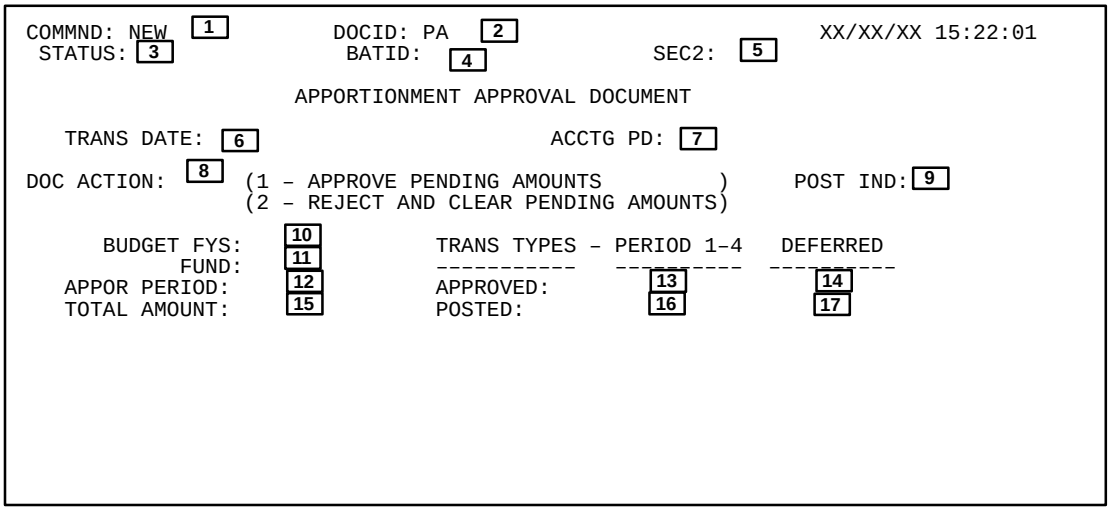

Figure 3:6. Apportionment Approval Document (PA)

Other Fields*(cont'd)*

[7] **Acctg Pd** (*optional default, numeric field; 4 positions)*. Key in the open accounting period date, using the *mm* format, press [Tab] and the *yy* format, press [Tab]. If left blank, the system defaults to the accounting period inferred from the document date in the CLDT, but it is not displayed. Note: The Acctg Pd refers to the fiscal month and year, e.g., November 2000 is 02 01. You cannot enter a future accounting period.

[8] **Doc Action** *(required, numeric field; 1 position*).

APV: Key in ***1*** to approve pending amounts.

REJ: Key in ***2*** to reject and clear pending amounts.

[9] **Post Ind** *(required, alpha field; 1 position).* Key in ***Y*** to post to the YTD budget authority. Posting reflects the Appor Period (**Field 12**) through the end of the fiscal year.

[10] **Budget FYs** *(optional default, numeric field; 2 positions).* Key in the last 2 digits of the budget fiscal year(s). See FSYR for valid fiscal years. If left blank, the system defaults to the budget fiscal years inferred from the transaction date.

[11] **Fund** *(required, alphanumeric field; max. of 3 positions*). Key in the fund code. See FUND for valid fund codes.

[12] **Appor Period** *(required, numeric field; 1 position).* Key in the apportionment period ***1***.

Note: When you enter *1*, the funds will be available beginning in quarter one through the end of the fiscal year.

[13] **Trans Types Approved Period 1-4** *(required, alpha field; 2 positions).* Key in the accounting transaction type ***AP*** for approval.

[14] **Trans Types Approved Deferred** *(no-entry).* Leave blank.

[15] **Total Amount** *(optional default, numeric field; max. of 15 positions)*. Key in the sum (use decimal) of the pending amounts for all apportionment periods. If left blank, all pending authority for a fund will be approved.

[16] **Trans Types Posted Period 1-4** *(required, numeric field; 2 positions).* Key in the accounting transaction type ***01***.

[17] **Trans Types Posted Deferred** *(no-entry).* Leave blank.

After Completing The Fields

Follow the steps below to edit and process the data:

1. At the Command field, key in ***E*** (edit).
2. Press [Enter] to edit the data. If errors are detected, error messages are displayed at the bottom of the screen. All fatal errors must be corrected before the database is updated. For more information about error messages and correcting errors, see **Part 2, System Edits**.
3. After the data passes system edits, key in ***R*** (run) at the Command field.
4. Press [Enter]. The document status is displayed.

Rejecting A Document. At the PA screen (**Figure 3:6**), complete the fields using the instructions under **Approving/Rejecting A Document**. Key in ***2*** at the Doc Action field.

Performing Other Actions. For general instructions on deleting documents, see **Part 2, Using Documents**.

Budget Execution Document (Allocation) (BE)

The BE is used at the National Office, Budget Division to allocate funds to the Division level.

After the BE is processed, you can view the results in the following tables:

- Appropriation Inquiry Table (APPR)
- Apportionment Inquiry Table (APOR)
- Allocation Inquiry Table (ALOC)
- Fiscal Year Allocation Inquiry Table (FALC)
- Fiscal Year Allotment Inquiry Table (FALT)
- Fiscal Year Appropriation Inquiry Table (FAPP)
- Fiscal Year Apportionment Inquiry Table (FAPR)
- General Ledger Balance Inquiry Table (GLBL)

To access the BE, at the FFS screen, key in ***L*** at the Action field and press [Tab]. Key in ***BE*** at the TableID field. Use the [Space Bar] to erase the remaining 2 characters. Press [Enter]. The BE screen (**Figure 3:7**) is displayed.

Detailed instructions for adding and changing BEs are described below.

Adding/Changing A Document. At the BE screen, complete the fields as follows:

Command Fields

[1] **Commnd** *(no-entry)*. ***New*** is system generated. Press [Tab].

[2] **DocID** *(required, alphanumeric field; max. of 15 positions)*. At the system-generated transaction code (***BE***), press [Tab]. Key in the sec1 code (i.e., the 2 position division code) and press [Tab]. Key in the Org Code (5-positions). Press [#], then press [Enter]. Sequential numbers are generated in positions 10–15.

After [Enter] is pressed, the cursor appears in the Trans Date field and the Command field changes from *New* to a blank field.

[3] **Status** *(no-entry)*. After the document is processed, this field displays the current status of a document.

[4] **BatID** (*no-entry*). This field is not used for this document.

[5] **Sec2** *(no-entry)*. The system generates the security code that is inferred from your user ID to verify your authority to create this document. This data is not displayed.

Header Fields

[6] **Trans Date** (*optional default, numeric field; 6 positions)*. Key in the date (*mmddyy*) of the document, usually the current date, but never a future date. If left blank, the system defaults to the date the document is accepted by the system. Note: When keying in the date, enter the 2-digit month, press [Tab]; enter the 2-digit date, press [Tab]; enter the 2-digit year and press [Tab].

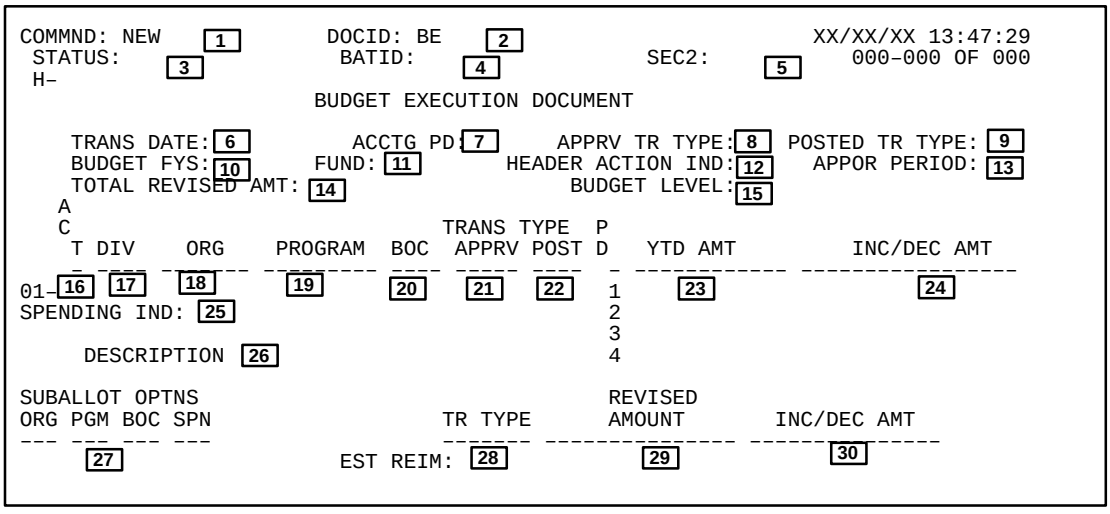

Figure 3:7. Budget Execution Document (Allocation) (BE)

Header Fields *(cont'd)*

[7] **Acctg Pd** *(optional default, numeric field; 4 positions).* Key in the open accounting period date using the *mm* format, press [Tab] and the *yy* format, press [Tab]. If left blank, the system defaults to the accounting period inferred from the document date in the CLDT, but it is not displayed. Note: The Acctg Pd refers to the fiscal month and year, e.g., November 2000 is 02 01. You cannot enter a future accounting period.

[8] **Apprv Tr Type** *(required, alpha field; 2 positions).* Key in the approved transaction type ***AP*** for the dollar amount entered.

[9] **Posted Tr Type** *(required, numeric field; 2 positions).* Key in the posted transaction type ***01*** for the dollar amount entered.

[10] **Budget FYs** *(optional default, numeric field; 2 positions).* Key in the last 2 digits of the budget fiscal year. See the FSYR for valid fiscal years. If left blank, the system defaults to the budget fiscal years inferred from the transaction date.

[11] **Fund** *(required, alphanumeric field; max. of 3 positions).* Key in the fund code. See the FUND for valid fund codes.

[12] **Header Action Ind** *(no-entry).* Leave blank. If the header action indicator is not entered in this field, it must be entered in **Field 16**.

[13] **Appor Period** *(required, numeric field; 1 position).* Key in the apportionment period ***1.***

[14] **Total Revised Amt** *(no-entry).* Leave blank.

[15] **Budget Level** *(required, alpha field; 2 positions).* Key in ***AC*** for the allocation level.

After completing the header fields. press [Enter]. Complete the line fields (**Figure 3:7**) as described below.

Line Fields

[16] **Act** *(conditional, alpha field; 1 position).* If the action code is not entered in the Header Action Ind (**Field 12**), key in one of the following:

ADD: Key in ***A*** to add new budget authority or reactivate an inactive budget line.

CHG: Key in ***C*** to change an existing authority.

[17] **Div** *(required, numeric field; 2 positions).* Key in the division code. See the DVSN for valid division codes.

[18] **Org** *(no-entry).* This field is not used for the allocation level.

[19] **Program** *(no-entry).* Leave blank.

[20] **BOC** *(no-entry).* This field is not used for this document.

[21] **Trans Type (Apprv)** *(no-entry).* This field is system generated with data inferred from the header screen.

[22] **Trans Type (Post)** *(no-entry).* This field is system generated with data inferred from the header screen.

[23] **YTD Amt (1, 2, 3, 4)** *(no-entry).* Leave blank.

[24] **Inc/Dec Amt (1, 2, 3, 4)** *(required, numeric field; max. of 15 positions).*

ADD: Key in the new amount (use decimal) in the first period.

CHG: Key in the signed amount of the increase or decrease.

Note: If recording a negative budget authority, key in a negative sign before the amount.

[25] **Spending Ind** *(no-entry).* Leave blank.

[26] **Description** *(optional, alphanumeric field; max. of 30 positions).* Key in a description.

[27] **Suballot Optns (Org, Pgm, BOC, Spn)** *(no-entry).* These fields are not used for the allocation level.

The following fields are relevant only to the funds which require estimated reimbursement or anticipated collections to finance authority.

[28] **Est Reim Tr Type** *(no-entry).* This field is not used by RD.

[29] **Est Reim Revised Amount** *(no-entry).* This field is not used by RD.

[30] **Est Reim Inc/Dec Amt** *(no-entry).* This field is not used by RD.

After Completing The Fields

Follow the steps below to edit and process the data:

1. At the Command field, key in ***E*** (edit).

2. Press [Enter] to edit the data. If errors are detected, error messages are displayed at the bottom of the screen. All fatal errors must be corrected before the database is updated. For more information about error messages and correcting errors, see **Part 2, System Edits**.

3. After the data passes system edits, key in ***R*** (run) at the Command field.

4. Press [Enter]. The document status is displayed.

Performing Other Actions. For general instructions on deactivating and deleting documents, see **Part 2, Using Documents**.

Budget Execution Document (Allotment) (BL)

The BL is used by the Headquarters allottees and State Office budget staffs to distribute funds to Organization Level 1 and by State Offices to budget object class (BOC) rollup code. A BL must be established for each organization level 1 and BOC rollup code, even if the allotment amount is zero.

After the BL is processed, you can view the results in the following tables:

- Appropriation Inquiry Table (APPR)
- Apportionment Inquiry Table (APOR)
- Allocation Inquiry Table (ALOC)
- Allotment Inquiry Table (ALLT)
- Fiscal Year Allocation Inquiry Table (FALC)
- Fiscal Year Allotment Inquiry Table (FALT)
- Fiscal Year Appropriation Inquiry Table (FAPP)
- Fiscal Year Apportionment Inquiry Table (FAPR)
- General Ledger Balance Inquiry Table (GLBL)

To access the BL, at the FFS screen, key in ***L*** at the Action field and press [Tab]. Key in ***BL*** at the TableID field. Use the [Space Bar] to erase the remaining 2 characters. Press [Enter]. The BL screen (**Figure 3:8**) is displayed.

Detailed instructions for adding and changing BLs are described below.

Adding/Changing A Document. At the BL screen, complete the fields as follows:

Command Fields

[1] **Commnd** *(no-entry)*. ***New*** is system generated. Press [Tab].

[2] **DocID** *(required, alphanumeric field; max. of 15 positions).* At the system-generated transaction code (***BL***), press [Tab]. Key in the sec1 code (i.e., the 2 position division code) and press [Tab]. Key in the Org Code (5-positions). Press [#], then press [Enter]. Sequential numbers are generated in positions 10–15.

After [Enter] is pressed, the cursor appears in the Trans Date field and the Command field changes from *New* to a blank field.

[3] **Status** *(no-entry).* After the document is processed, this field displays the current status of a document.

[4] **BatID** (*no-entry*). This field is not used for this document.

[5] **Sec2** *(no-entry).* The system generates the security code that is inferred from your user ID to verify your authority to create this document. This data is not displayed.

Header Fields

[6] **Trans Date** (*optional default, numeric field; 6 positions)***.** Key in the date (*mmddyy*) of the document, usually the current date, but never a future date. If left blank, the system defaults to the date the document is accepted by the system. Note: When keying in the date, enter the 2-digit month, press [Tab]; enter the 2-digit date, press [Tab]; enter the 2-digit year and press [Tab].

```
COMMND: NEW    [1]        DOCID: BL    [2]                          XX/XX/XX 13:47:29
 STATUS:    [3]            BATID:    [4]            SEC2:    [5]      000-000 OF 000
 H-
                         BUDGET EXECUTION DOCUMENT

    TRANS DATE: [6]        ACCTG PD: [7]     APPRV TR TYPE: [8]  POSTED TR TYPE: [9]
    BUDGET FYS: [10]     FUND: [11]       HEADER ACTION IND: [12]   APPOR PERIOD: [13]
    TOTAL REVISED AMT: [14]                  BUDGET LEVEL: [15]
   A
   C                                 TRANS TYPE  P
    T DIV    ORG    PROGRAM  BOC  APPRV POST  D   YTD AMT          INC/DEC AMT
    _ ____ _______ ________ ____ _____ ____  _ ____________ _________________
01-[16] [17]  [18]     [19]     [20]  [21]  [22]  1    [23]                [24]
SPENDING IND: [25]                               2
                                                 3
     DESCRIPTION [26]                            4

SUBALLOT OPTNS                                   REVISED
ORG PGM BOC SPN                   TR TYPE        AMOUNT       INC/DEC AMT
--- --- --- ---                   -------  ---------------  ---------------
     [27]                 EST REIM: [28]          [29]            [30]
```

Figure 3:8. Budget Execution Document (Allotment) (BL)

Header Fields *(cont'd)*

[7] **Acctg Pd** *(optional default, numeric field; 4 positions).* Key in the open accounting period date using the *mm* format, press [Tab] and the *yy* format, press [Tab]. If left blank, the system defaults to the accounting period inferred from the document date in the CLDT, but it is not displayed. Note: The Acctg Pd refers to the fiscal month and year, e.g., November 2000 is 02 01. You cannot enter a future accounting period.

[8] **Apprv Tr Type** *(required, alpha field; 2 positions).* Key in the approved transaction type ***AP*** for the dollar amount entered.

[9] **Posted Tr Type** *(required, numeric field; 2 positions).* Key in the posted transaction type ***01*** for the dollar amount entered.

[10] **Budget FYs** *(optional default, numeric field; 2 positions).* Key in the last 2 digits of the budget fiscal year. See the FSYR for valid fiscal years. If left blank, the system defaults to the budget fiscal years inferred from the transaction date.

[11] **Fund** *(required, alphanumeric field; max. of 3 positions).* Key in the fund code. See the FUND for valid fund codes.

[12] **Header Action Ind** *(no-entry).* Leave blank. If the header action indicator is not entered in this field, it must be entered in **Field 16**.

[13] **Appor Period** *(required, numeric field; 1 position).* Key in the apportionment period ***1.***

[14] **Total Revised Amt** *(no-entry).* Leave blank.

[15] **Budget Level** *(required, alpha field; 2 positions).* Key in ***AL*** for the allotment level.

After completing the header fields, press [Enter]. Complete the line fields (**Figure 3:8**) as described below.

Line Fields

[16] **Act** *(conditional, alpha field; 1 position).* If the action code is not entered in the Header Action Ind (**Field 12**), key in one of the following:

ADD: Key in ***A*** to add new budget authority or reactivate an inactive budget line.

CHG: Key in ***C*** to change an existing authority.

[17] **Div** *(required, numeric field; 2 positions).* Key in the division code. See the DVSN for valid division codes.

[18] **Org** *(required, alphanumeric field; 5 positions).* Key in the organization level 1 code.

[19] **Program** *(no-entry).* Leave blank.

[20] **BOC** *(required, numeric field; 4 positions).* Key in the BOC rollup code. Note: This field is applicable for States only.

[21] **Trans Type (Apprv)** *(no-entry).* This field is system generated with data inferred from the header screen.

[22] **Trans Type (Post)** *(no-entry).* This field is system generated with data inferred from the header screen.

[23] **YTD Amt (1, 2, 3, 4)** *(no-entry).* Leave blank.

[24] **Inc/Dec Amt (1, 2, 3, 4)** *(required, numeric field; max. of 15 positions).*

ADD: Key in the new amount (use decimal) in the first period.

CHG: Key in the signed amount of the increase or decrease.

Note: If recording a negative budget authority, key in a negative sign before the amount.

[25] **Spending Ind** *(optional, alpha field; 1 position).* Key in one of the following:

C = Full spending control

P = Presence spending control

An entry in this field will override control specified in the FUN2.

[26] **Description** *(optional, alphanumeric field; max. of 30 positions).* Key in Org (**Field 18**) and BOC (**Field 20**) titles.

[27] **Suballot Optns (Org, Pgm, BOC, Spn)** *(conditional, alpha field; max. of 4 positions).* If suballotments will be used by the organization, key in the following:

Org = Y

Pgm= N

Boc = Y

Spn = N

[28] **Est Reim Tr Type** *(no-entry).* This field is not used by RD.

[29] **Est Reim Revised Amount** *(no-entry).* This field is not used by RD.

Line Fields *(cont'd)*

30 **Est Reim Inc/Dec Amt** *(no-entry).* This field is not used by RD.

After Completing The Fields

Follow the steps below to edit and process the data:

1. At the Command field, key in ***E*** (edit).

2. Press [Enter] to edit the data. If errors are detected, error messages are displayed at the bottom of the screen. All fatal errors must be corrected before the database is updated. For more information about error messages and correcting errors, see **Part 2, System Edits**.

3. After the data passes system edits, key in ***R*** (run) at the Command field.

4. Press [Enter]. The document status is displayed.

Performing Other Actions. For general instructions on deactivating and deleting documents, see **Part 2, Using Documents**.

Suballotment Document (SA)

The SA can be used to distribute funds to Organization Levels 2, 3, 4, by BOC rollup code for headquarters and level 2 by BOC rollup code for state offices.

After the SA is processed, you can view the results in the following tables:

- Suballotment Spending Control Inquiry Table (SASP)
- Suballotment Structure Inquiry Table (SAST)
- Suballotment Forward Reference Inquiry Table (SAFR)
- Allotment Inquiry Table (ALLT)
- Allotment Status Inquiry Table (ALST)
- Suballotment Inquiry Table (SAIN)
- General Ledger Balance Inquiry Table (GLBL)

To access the SA, at the FFS screen, key in ***L*** at the Action field and press [Tab]. Key in ***SA*** at the TableID field. Use the [Space Bar] to erase the remaining 2 characters. Press [Enter]. The SA screen (**Figure 3:9**) is displayed

Detailed instructions for adding and changing SAs are described below.

Adding/Changing A Document. At the SA screen, complete the fields as follows:

Command Fields

[1] **Commnd** *(no-entry)*. ***New*** is system generated. Press [Tab].

[2] **DocID** *(required, alphanumeric field; max. of 15 positions)*. At the system-generated transaction code (***SA***), press [Tab]. Key in the sec1 code (i.e., the 2 position division code) and press [Tab]. Key in the Org Code (5-positions). Press [#], then press [Enter]. Sequential numbers are generated in positions 10–15.

After [Enter] is pressed, the cursor appears in the Trans Date field and the Command field changes from *New* to a blank field.

[3] **Status** *(no-entry)*. After the document is processed, this field displays the current status of a document.

[4] **BatID** (*no-entry*). This field is not used for this document.

[5] **Sec2** *(no-entry)*. The system generates the security code that is inferred from your user ID to verify your authority to create this document. This data is not displayed.

Header Fields

[6] **Trans Date** (*optional default, numeric field; 6 positions)*. Key in the date (*mmddyy*) of the document, usually the current date, but never a future date. If left blank, the system defaults to the date the document is accepted by the system. Note: When keying in the date, enter the 2-digit month, press [Tab]; enter the 2-digit date, press [Tab]; enter the 2-digit year and press [Tab].

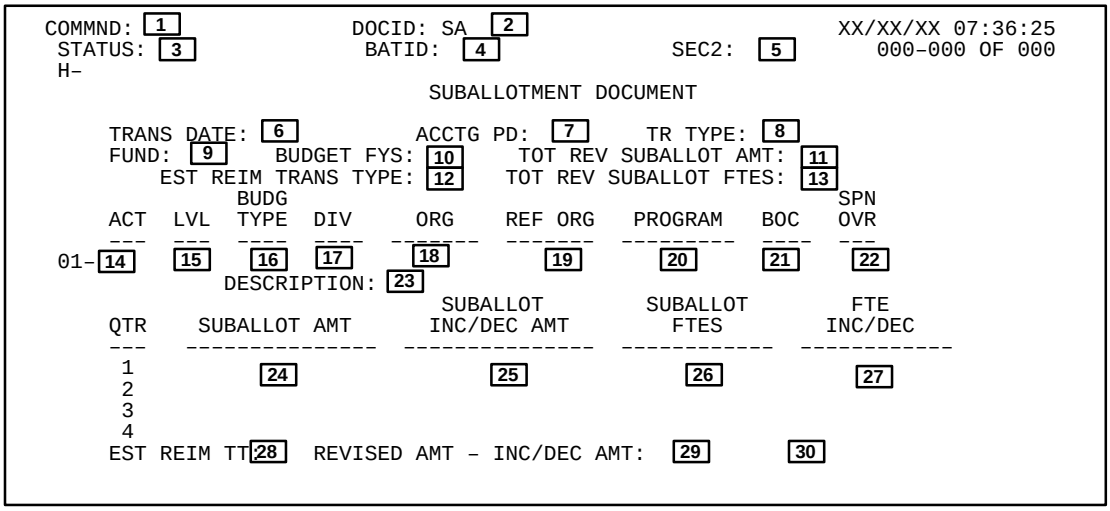

Figure 3:9. Suballotment Document (SA)

Header Fields *(cont'd)*

[7] **Acctg Pd** *(optional default, numeric field; 4 positions).* Key in the open accounting period date using the *mm* format, press [Tab] and the *yy* format, press [Tab]. If left blank, the system defaults to the accounting period inferred from the document date in the CLDT, but it is not displayed. Note: The Acctg Pd refers to the fiscal month and year, e.g., November 2000 is 02 01. You cannot enter a future accounting period.

[8] **Tr Type** *(required, numeric field; 2 positions).* Key in the transaction type ***01*** which defines the appropriate accounting posting model for the SA.

[9] **Fund** *(required, alphanumeric field; max. of 3 positions).* Key in the fund code. See the FUND for valid fund codes.

[10] **Budget FYs** *(required, numeric field; 2 positions).* Key in the last 2 digits of the budget fiscal year. See the FSYR for valid fiscal years.

[11] **Tot Rev Suballot Amt** *(no-entry).* Leave blank.

[12] **Est Reim Trans Type** *(no-entry).* Leave blank.

[13] **Tot Rev Suballot FTEs** *(no-entry).* This field is not used by RD.

After completing the header fields, press [Enter]. Complete the line fields (**Figure 3:9**) as described below.

Line Fields

[14] **Act** *(required, alpha field; 1 position).*

ADD: Key in ***A*** to add or reactivate.

CHG: Key in ***C*** to change an existing authority.

[15] **Lvl** *(required, numeric field; 2 positions).* Key in the level for the suballotment. The level must reference an allotment. For states, always enter 1 because states only have 1 suballotment level which corresponds to their organization level 2. For headquarters organizations, the suballotment level can be 1, 2, or 3 based on organization level 2, 3, or 4, respectively. The suballotment level numeric value for headquarters organizations is always the organization level for the organization receiving the suballotment (**Field 18**) minus 1.

[16] **Budg Type** *(required, alpha field; 1 position).* Key in ***D*** for dollars suballocated.

[17] **Div** *(required, alphanumeric field; 2 positions).* Key in the division code. See the DVSN for valid division codes.

[18] **Org** *(required, alphanumeric field; 5 positions).* Key in the organization receiving the suballotment. The Org must always be 1 level below the level making the suballotment (**Field 19**). See the ORGN for valid organization codes.

[19] **Ref Org** *(required, alphanumeric field; 5 positions).* Key in the organization that is making the suballotment. The Ref Org must always be 1 level above the Org (**Field 18**) receiving the suballotment. See ORGN for valid organization codes.

[20] **Program** *(no-entry).* Leave blank.

[21] **BOC** *(required, numeric field; 4 positions).* Key in the BOC rollup code.

[22] **Spn Ovr** *(no-entry).* This field is not used by RD.

[23] **Description** *(optional, alphanumeric field; max. of 30 positions).* Key in Org (**Field 18**) and BOC (**Field 21**) titles.

[24] **Suballot Amt (1, 2, 3, 4)** *(no-entry).* Leave blank.

[25] **Suballot Inc/Dec Amt (1, 2, 3, 4)** *(required, numeric field; max. of 15 positions).*

ADD: Key in the signed amount (use decimal) in quarter ***1***, to make funds available for the entire year.

CHG: Key in the increase or decrease amount (use decimal) in quarter ***1***, to make funds available for the entire year.

Note: If recording a negative budget authority, key in a negative sign before the amount.

[26] **Suballot FTES** *(no-entry).* This field is not used by RD.

[27] **FTE Inc/Dec** *(no-entry).* This field is not used by RD.

The following data elements are relevant for estimated reimbursements in addition to appropriated funds.

[28] **Est Reim (TT)** *(no-entry).* This field is not used by RD.

[29] **Est Reim (Revised Amt)** *(no-entry).* This field is not used by RD.

[30] **Est Reim (Inc/Dec Amt)** *(no-entry).* This field is not used by RD.

After Completing The Fields

Follow the steps below to edit and process the data:

1. At the Command field, key in ***E*** (edit).

2. Press [Enter] to edit the data. If errors are detected, error messages are displayed at the bottom of the screen. All fatal errors must be corrected before the database is updated. For more information about er-

ror messages and correcting errors, see **Part 2, System Edits**.

3. After the data passes system edits, key in ***R*** (run) at the Command field.

4. Press [Enter]. The document status is displayed.

Performing Other Actions. For general instructions on deactivating and deleting documents, see **Part 2, Using Documents**.

PART 4.

SPENDING

Spending Overview **4:3**
Steps in the Spending Chain 4:3
Referencing Related Documents In A Spending Chain 4:5
Tolerance Limit Check 4:5
Data Entered On Purchasing Documents 4:5
Automated Disbursement Process 4:5
Prompt Pay Determination 4:6
Scheduling Payment Terms 4:6
Payment Voucher Text 4:7
Additional Accounts Payable Topics 4:7
Completing The Spending Cycle 4:7
Integrated Functionality 4:7
Spending Documents **4:9**
Integrated Documents 4:9
Interfaced Documents 4:9
Requisition Document (RQ) 4:11
Miscellaneous Order Document (MO) 4:15
Direct Disbursement Document (DD) 4:20
Payment Voucher Document (PV) 4:24
Standard Voucher Clone Document (CM) 4:30
Training Order Document (TG) 4:34
FEDSTRIP Miscellaneous Order Document (FO) 4:38
FEDSTRIP Payment Voucher Document (FV) 4:40
FEDSTRIP OPAC Direct Disbursement Document (OD) 4:43
FEDSTRIP Standard Voucher Document (SF) 4:46

FTSP Direct Disbursement Document (DF) 4:48
FTSP Accrual/Suspense Document (VF) 4:50
MPOL No-Check Disbursement Document (DM) 4:52
MPOL Suspense Document (VM) 4:55
PRCH Miscellaneous Order Documents (GA, GC, GD) 4:57
PRCH Type 40 Receiver Document (EA) 4:60
PRCH OPAC Payable Documents (KA, KD) 4:62
PRCH Standard Voucher Document (SP) 4:65
PRCH Payment Voucher Documents (VA, VC, VD, VE) 4:67
TRAN Transportation Invoice Document (T1) 4:70
TRAN Travel Related Payment Voucher Document (T2) 4:72
GVTS Payment Voucher Document (G1) 4:74
GVTS Transportation Invoice Document (G2) 4:76
GVTS Standard Voucher Document (G3) 4:79
TRVL Obligation Document (XO) 4:81
TRVL Travel Advance Document (XA) 4:83
TRVL Travel Voucher Document (Expenses) (XT) 4:85
TRVL Third Party Payment Voucher Document (XP) 4:88
TRVL Travel Voucher Document (Relocations) (XV) 4:90
UTVN Accrual Document (SU) 4:93
UTVN Payment Voucher Document (UV) 4:95
TELE Standard Voucher Document (SE) 4:97
TELE Payment Voucher Document (VT) 4:99
PCMS Payment Voucher Document (V2) 4:101
PCMS Standard Voucher Document (V5) 4:103
PCMS Payment Voucher Document (V8) 4:105
PCMS Standard Voucher Document (V6) 4:107

Spending Overview

The Spending function combined with the Accounts Payable and Automated Disbursements functions, records, monitors, and controls the financial and accounting-related activities in the spending process. These three functions perform all financial, cost accounting, and reporting functions that are associated with the purchase of goods and services. The spending activities that FFIS records for RD include the following:

- Committing for goods and services
- Obligating for goods and services
- Recording payments (expenditures) for goods and services received

The Automated Disbursements function records, monitors, and controls the activities associated with the disbursement of funds. These activities include the following:

- Disbursing funds by printing checks or generating Treasury disbursement tapes
- Reconciling disbursements with Treasury's records

Steps in the Spending Chain

A spending chain is the series of accounting procedures and paper flows that are used when purchasing goods and services. In FFIS, a spending chain is the combination of up to six different accounting steps: commitment, obligation, receiver, invoice, expenditure, and disbursement. However, the spending chain for RD consists of either 2 steps, commitment and expenditure only; or 3 steps, commitment, obligation, and expenditure. See **Figure 4:1** for an example of the spending chain.

Note: The payment process represents the end of the spending chain for the users, however, disbursements actually complete the spending cycle and are system generated. In some cases, the actual disbursement may precede the recording of the expenditure (i.e., payroll).

Reimbursable Agreements. Both lead agency (i.e., the agency responsible for all agency expenses in a formal/informal agreement) and the reimbursing agency (i.e., the agency responsible for repaying the lead agency for their portion of the expenses) must account for funds associated with Reimbursable Agreements.

Lead Agency – RD as lead agency must account for the commitment, obligation, and expenditure of the total amount of the expense. See **Part 5**, **Accounts Receivable**, for additional information and requirements.

For direct-entry documents and feeder system documents requiring the entry of accounting codes (e.g., PRCH), the following steps should be performed:

Commitment – Establish using separate lines of accounting codes as follows:

- RD's share should be charged to the General Fund.
- Each Reimbursing Agency's share should be charged to the Reimbursable Fund.

Obligation – Establish using the same lines of accounting as the commitment.

Expenditure – Establish using the same lines of accounting as the commitment and obligation.

For the feeder systems utilizing stored accounting (i.e., UTVN, TELE, FTSP, and MPOL), commitments, obligations, and payments should be made using a single line of accounting code charging the General Fund. Periodically during the year, the Functional Administrator will request information to adjust the General Fund for the actual amounts billed to the other agencies.

Reimbursing Agency – RD as a reimbursing agency must account for their share of the expense. A commitment and obligation should be established in FFIS to reserve funds. If an exact amount is not known, an estimate should be used. The Funds will be liquidated by means of document referencing when collection has been made.

Commitment. A commitment is the setting aside of funds that are used to purchase goods or services in the future either through direct purchase (vendor) or indirect purchase (reimbursable agreement). Commitments are not legally binding; instead they represent, in advance, the intent to purchase. A commitment optionally draws down funds availability in FFIS. RD enters commitments into FFIS using the Requisition Document (RQ) and the Standard Voucher Clone Document (CM).

Obligation. An obligation records the accounting and budgetary impact of an order to purchase goods and services either directly or indirectly. Once an order is placed, the client has a legal responsibility or obligation to pay for the order, and the available budget amount is reduced. RD enters obligations into FFIS using the Miscellaneous Order Document (MO) and the Training Order Document (TG).

Figure 4:3 describes an FFIS document used to enter obligations.

Note: For reimbursable agreements, refer to the Rural Development section of **Appendix O**, **OPAC Agency Requirements**, for specific accounting data requirements that must be provided to the lead agency/organization to ensure payment of subject expense and liquidation of the obligation through document referencing.

Expenditure. An expenditure is an authorization to pay for goods and services received. Expenditures may be

recorded before, after, or at the same time as the disbursement of funds. Expenditures reference and liquidate documents in the spending chain that were previously entered. In FFIS, the Accounts Payable and the Automated Disbursements functions record expenditures. RD enters expenditures into FFIS using the Payment Voucher Document (PV), the Direct Disbursement Document (DD), and the Recurring Payment Voucher Data Entry Table (REPV). See **Part 8, FFIS Tables,** for instructions on completing the REPV.

Figure 4:4 describes the documents/table used to record expenditures.

Commitment – >		Expenditure
Commitment – >	Obligation – >	Expenditure

Figure 4:1. Example of RD Spending Chain

Document ID	Name	Transactions Recorded
RQ	Requisition Document	Intent to purchase and draw-down of funds availability
CM	Standard Voucher (clone)	Annual estimate

Figure 4:2. Documents Used to Enter Commitments

Document ID	Name	Transactions Recorded
MO	Miscellaneous Order Document	Miscellaneous Non-commodity purchases, Contracts/Agreements for goods and services, Fedstrip, Government Bills of Lading.
TG	Training Order Document	Training Obligations prior to services being rendered or receipt of goods, and to report training-specific elements.

Figure 4:3. Documents Used to Enter Obligations

Document ID	Name	Transactions Recorded
PV	Payment Voucher Document	Records an expenditure and initiates a Treasury check or Electronic Funds Transfer (EFT) disbursement.
DD	Direct Disbursement Document	Records direct funds transfers to other Government agencies (i.e., Online Payment and Collection (OPAC) payments).
Table ID	**Name**	**Transactions Recorded**
REPV	Recurring Payment Voucher Data Entry Table	Provides information that the system uses to automatically create payment voucher transactions on a regular basis (e.g., monthly rent payments).

Figure 4:4. Documents/Table Used to Record Expenditures

Disbursement. A disbursement is the transmission of cash from an Agency to a supplier of goods or services. Once payments are processed in FFIS, they are scheduled for disbursement based on available discounts and Prompt Pay regulations. FFIS supports two disbursing models: the Treasury disbursing model and the check printing model. RD uses the Treasury disbursing model.

Under the Treasury disbursing model, the Automated Disbursements function performs the following processing:

- Selects payment for disbursement
- Applies any discount, interest, or penalties
- Applies available credits

- Consolidates payment to the same vendor, if desired
- Generates payment schedule files for transmittal to Treasury

After the schedules are generated, the FFIS Treasury Reconciliation process records the results of Treasury's disbursement. There are two steps in the reconciliation process:

- Manually records Treasury's confirmation or rejection of a schedule.
- An offline process updates the Automated Disbursements inquiry tables to reflect the status of the schedule and, for confirmed schedules, to display the actual check numbers assigned to each payment.

FFIS also records cancellations of disbursements and reconciles the cancellations with Treasury. In addition, FFIS supports Prompt Pay reporting and 1099 reporting. See the **1099 Reporting** in this part.

Referencing Related Documents In A Spending Chain

In FFIS, documents form spending chains through referencing. Each step in the chain may reference a prior transaction. For example, an obligation document may reference a previously entered requisition document. Referencing provides the following benefits:

- Ensures funds are accounted for only once, since the referenced document is liquidated by the referencing document
- Reduces data entry, since information from the referenced transaction is carried forward
- Enforces tolerance limits to prevent overspending
- Automatically makes unused funds available once the transaction is finalized

Tolerance Limit Check

Within the spending chain, tolerance limits are preset in the Transaction Category Reference Table (TCAT) to define the dollar difference that FFIS permits between all related documents. There are two types of tolerance limits: overage tolerance limits and underage tolerance limits. Overage tolerance limits define the maximum dollar difference allowed for documents in which the referencing document line amount exceeds the referenced document line amount. Underage tolerance limits define the maximum dollar difference allowed for documents in which the referencing document line amount is less than the referenced line amount. Both types of tolerance limits are set in the TCAT as a percentage, a maximum amount, and a minimum amount.

When a tolerance limit is set to zero, all document line amount must equal. In addition, when a document is referenced and the Partial/Final (P/F) flag in the referencing document is set to ***F,*** tolerance limit checks are invoked. If a document is within tolerance limits and budget spending controls are passed, the document is posted to the ledgers.

One of the benefits to referencing is to accurately liquidate a spending transaction. In FFIS there are two types of liquidation: partial and final. You specify how to liquidate the referenced document using the P/F field on the referenced spending document. If ***F*** is entered, the total outstanding balance of the spending chain is closed and any unused funds are returned to the budget. If ***P*** is entered, only the amount entered is placed against the budget, but the total spending chain is not closed. Partial liquidations are used when a commitment or obligation is referenced more than once. Any unused amounts are not returned to the budget, but remain for later use.

Data Entered On Purchasing Documents

FFIS records a combination of accounting data and descriptive information on the document.

Accounting Data. Accounting data is captured on all purchasing documents. The accounting data is comprised of the Accounting Classification Code Structure (ACCS) dimensions (e.g., budget fiscal year, fund, budget organization, and reporting category) budget object code (BOC)), and the total dollar amount of the purchase. See **Part 1**, **Introduction To FFIS** for additional information on the ACCS dimensions.

Descriptive Information. In addition to accounting data, purchasing documents may contain descriptive information including the following:

- Name and phone number of the person requesting the item
- Name, address, and phone number of the vendor
- Name and phone number of a contact with a particular vendor
- Delivery data including the room of the building to which the items should be delivered

Automated Disbursement Process

All Agency payments are Treasury-disbursed. The automated disbursements process is executed by NFC personnel, and many of the system options related to disbursements are defined and controlled by the Department. Each of the FFIS disbursements processes is described below.

Generating Automated Payment Schedules. The FFIS Schedule Generation Process selects payments for disbursement based on their schedule date, applies in-

terest and discounts, applies credits when appropriate, and produces tapes for Treasury. The process also updates the budget and general ledger to reflect the interest and discounts and updates the disbursements inquiry tables (e.g., Treasury Schedule Control Header Table (TSCH)) to list the payments included on each schedule.

All payment vouchers, except those assigned to manual schedules, are submitted to Treasury on automated payment schedules. Two categories of schedules, type SF–1166 and Automated Clearing House (ACH) schedules are produced. If the user does not specify a schedule category on the payment voucher, the category defaults based on the amount of the transaction and options are defined for the vendor in the Vendor Reference Table (VEND).

Treasury Reconciliation. For all disbursement schedules sent to Treasury, Treasury notifies NFC of the results of the disbursement process through the Government On-line Accounting Link System (GOALS). There are two steps in the Treasury Reconciliation process:

- An authorized NFC user records the Treasury confirmation or rejection of a disbursement schedule on the Treasury Schedule Control Header Table (TSCH) or the Treasury Schedule Control Rejection Reference Table (TSCR).
- An offline process updates the Automated Disbursements inquiry tables based on the confirmation or rejection.

Canceling Disbursements. NFC is responsible for all disbursements cancellations. RD users should contact their Functional Administrator, who will coordinate with NFC. The cancellations are entered through the Administrative Billings and Collections (ABCO) feeder system. NFC personnel notifies RD if the original payment must be re-entered.

Prompt Pay Reporting. The Treasury Reconciliation and Disbursements Cancellation processes create entries in the Prompt Pay Detail Table (PPDT). Each invoice that has been disbursed is located on this table with information concerning discounts, due date, paid date, accrued interest, paid interest and penalties, and reasons for late payment. Prompt Pay reports are generated from the Prompt Pay Summary tables (PPST, PPS2, PPS3), which include this disbursement information.

1099 Reporting. SF–1099s are produced annually for the Internal Revenue Service (IRS) and for vendors whose cumulative disbursement amount is greater than $600. To produce the SF–1099, the Vendor Prior Calendar Year Disbursement Amount Inquiry Table (VPYA) updates processes run on the last day of the calendar year. The vendor's cumulative disbursement amount is stored in the VEND and is updated by disbursements for expenditures against a 1099 vendor and a 1099 budget object code (BOC).

Prompt Pay Determination

One important factor in determining when a document should be scheduled for payment is whether or not the payment is subject to the Prompt Payment Act. The **Prompt Payment Act** is a law that specifies that certain types of payments to private vendors must be paid within a specified number of days, usually 30, from the date an agency receives the goods or the date the agency receives the invoice from the vendor. If the payment has not been generated by the specified date, the agency must pay the vendor interest on the funds due.

Three indicators determine whether a transaction qualifies for prompt pay:

- **Prompt Pay Flag**. This flag determines whether the payment is subject to provisions of the Prompt Payment Act based on how the document is defined in the Transaction Category Reference Table (TCAT).
- **Vendor Type Prompt Pay Indicator**. This indicator, defined in the Vendor Type Reference Table (VTYP) in the Prompt Pay Ind field, determines whether this type of vendor is subject to prompt pay.
- **Accounting Event Prompt Pay Indicator**. The Accounting Entries Definition Reference Table (ACED) also contains a prompt payment flag. Accounting events such as payments for supplies are subject to prompt pay, whereas prepayments are not subject to prompt pay.

To qualify for prompt pay, a transaction must be classified as such by all three prompt pay indicators.

Scheduling Payment Terms

The following terms are used when scheduling payments:

Treasury Disbursing Lag Days. The delay between when NFC sends the SF–1166 and the tapes to Treasury and when Treasury actually sends the payments is referred to as **Treasury Disbursing Lag Days**. Treasury Disbursing Lag Days are defined in the Disbursing Options Reference Table (DOPT).

Obligation Negotiated Payment Days. The number of days RD negotiated with the vendor to pay the invoice for a specified obligation is referred to as **Obligation Negotiated Payment Days**. Obligation Negotiated Payment Days are defined in the payment's referenced obligation.

Vendor Lag Days. The number of days RD contracted with the vendor to pay invoices are referred to as **Vendor Lag Days**. Vendor Lag Days are defined in the VEND.

Prompt Payment Lag Days. The number of days in which the vendor invoice should be paid according to the Prompt Payment Act are referred to as **Prompt Payment Lag Days**. Payment Lag Days are defined in the PPAY by prompt pay type.

Trigger Date Flag. This flag in the PPAY is used in determining the appropriate date for which the payment should be scheduled. This date is referred to as the **Trigger Date**. There are three values for this field:

- ***L*** – Used for payments subject to the standard prompt payment rules.
- ***D*** – Used for special commodity payments for which prompt payment rules are based on the acceptance or delivery of goods.
- ***I*** – Used for construction in progress, and special commodities for which prompt payment rules are based on the Invoice Log Date.

Payment Voucher Text

Text may be printed on all checks created by FFIS. For Treasury-disbursed checks, the text is printed on either the face of the check or on a comment card.

When checks are not grouped or no check specific text is entered, the invoice number from the PV is printed on the check or comment card.

Voucher-Specific Text. Forty characters of text may be entered on the header screen of the PV transaction. Up to thirteen 55-character lines of text may be entered in the Voucher Text Data Entry Table (VTXT) for any specific voucher.

Default Payment Text. Default payment text may be entered in the Default Payment Text Reference Table (DPTX); this text, followed by the voucher document ID, is printed on all checks for which no specific text was defined.

EFT Payment Text. The system prints the invoice numbers from the payment document lines as comments.

Additional Accounts Payable Topics

Here are some additional topics that are important to the Accounts Payable function.

Contract Holdbacks. A portion of the payment amount may be held back for later payment. The following information applies to this type of payment:

- Lines entered on a PV transaction with a Line Type of ***H*** are considered contract holdbacks.
- The contract holdback amount liquidates the referenced transaction amount but will not be scheduled for payment by the Disbursements function.
- To release the holdback amount for payment, the original PV is modified to decrease the contract holdback amount and to increase the non-holdback amount.

Accounting Entries For Accounts Payable Transactions. The Effective Transaction Type Definition Reference Table (GLTT) defines the effective transaction types used when payments are made.

- To be processed by FFIS, the transaction type entered on a payment voucher must be a valid payment transaction type.
- This edit ensures that proper accounting entries are made for disbursements.

The accounting effects for all payment voucher models are defined in the ACED and the Accounting Entries Reference Table (ACEN).

- When payables are processed, the system accesses the ACED to determine the accounting entry ID.
- The ACEN stores the accounting debits and credits associated with the accounting entry ID.

Completing The Spending Cycle

After payments are disbursed, all accounting entries are posted to the appropriate General Ledger accounts and reversing entries are automatically produced (i.e., an obligation is reversed when it is liquidated by a payment voucher). Partial and final payments are allowed against obligations. Tolerance limits are permitted between referenced documents and documents which exceed or fall short of these limits are rejected. The automatic verification of available balances and automatic restoration of available budget authority for payments less than the obligated amount is provided. The referencing of prior-year obligations as long as the expenditure is less than or equal to the obligated amount is allowed. Coding requirements are reduced by carrying forward codes from referenced documents (i.e., from order to expenditure).

Integrated Functionality

Some transactions (e.g., Purchase Order System (PRCH), Travel System (TRVL)) will continue to be processed through feeder systems. These systems have been **interfaced** into FFIS. As described in the **Overview, Part 1, Introduction To FFIS**, users will enter transactions into the feeder system, and the information will then be interfaced into FFIS updating all RD financial data. Other systems, however, originally processed through the feeder systems will now be processed directly within FFIS. These systems have been **integrated** into FFIS. Listed below are the integrated systems and the processing documents used in FFIS.

Miscellaneous Payments System (MISC)

Payments and adjustments which were previously entered into MISC through input forms (e.g., AD–742, Transfer and Adjust Voucher; AD–757, Miscellaneous Payments System) are entered directly into FFIS using the Requisition Document (RQ), Miscellaneous Order Document (MO), Payment Voucher Document (PV), and Direct Disbursement Document (DD).

Corrections, Adjustments, and Manual Payments System (CAPS)

Period-End estimates (other that Contract Obligations entered on MOs) which were previously entered into CAPS are entered directly into FFIS by the Functional Administrator using the the Standard Voucher Document (SV). Accounting adjustments for collections and collection transfers are entered into FFIS using the SV which is handled by the National Finance Center (NFC).

Training Information System (TRAI)

TRAI can no longer be used to accomplish financial transactions for training. RD users have three options for requisitioning, obligating, and paying for training: (1) through the Purchase Order System (PRCH) feeder; (2) through the Purchase Card Management System (PCMS) feeder; or (3) by direct processing within FFIS. The RQ, Training Order Document (TG), and PV are used for direct processing.

Refer to **Part 9, Appendix I, Rural Development FFIS Processing Matrix For Spending**.

Instructions for completing the documents discussed above are provided under **Spending Documents** in this part.

Instructions for the tables described in this part are provided in **Part 8, FFIS Tables**.

Spending Documents

Documents used in the Spending function are referred to as either *integrated* **or** *interfaced*. Integrated documents are established directly in FFIS by the user. Interfaced documents are created via an interface program and are electronically transmitted into FFIS from the feeder system.

Each document is briefly described below and the instructions for using each are provided following these descriptions or are provided in the part indicated in the description.

Integrated Documents

Requisition Document (RQ). Used to record a commitment and to enter the request for goods and/or services, including accounting and descriptive information related to a requisition, e.g., delivery location, delivery date, and requestor's name.

Standard Voucher Clone Document (CM). Used to commit funds for non-procurement related feeder system activity, record accounting information related to a commitment, and record descriptive information about the commitment such as delivery location, delivery date, and the requestor's name.

Miscellaneous Order Document (MO). Used to enter obligation information prior to receipt of goods and/or services being rendered.

Training Order Document (TG). Used to record training-specific obligations that contain elements such as start and completion dates, course code, and training code.

Direct Disbursement Document (DD). Used to record disbursements for events between agencies (interfund transfers). This document is used only by NFC personnel responsible for processing OPAC transactions.

Payment Voucher Document (PV). Used to record authorization of payment (Treasury check or EFT disbursement) to a vendor for goods and/or services accepted and invoiced to record revenue refunds, and to record balance sheet transfers.

Standard Voucher Document (SV). Used to record changes to the accounting distribution codes previously entered in a revenue or spending document. It records nonstandard accruals, period-end adjusting entries, balance sheet transfers, and accounting adjustments. Note: If an SV is required, contact RD's Functional Administrator.

Interfaced Documents

FEDS (FEDSTRIP) Miscellaneous Order Document (FO). Used to record FEDS obligations in FFIS.

FEDS (FEDSTRIP) Payment Voucher Document (FV). Used to record and automatically generate a disbursement to the Department of Defense (DoD).

FEDS (FEDSTRIP) OPAC Disbursement Document (OD). Used to record Online Payment and Collection System (OPAC) disbursements in FFIS.

FEDS (FEDSTRIP) Standard Voucher Document (SF). Used to record suspense postings, reversals, and charge-backs in FFIS.

FTSP Direct Disbursement Document (DF). Used to record a no-check disbursement in FFIS for FTSP invoices detailing FTS charges.

FTSP Accrual/Suspense Document (VF). Used to record end-of-month accruals for FTSP which reverse at the beginning of the subsequent month. The VF is also used to record various suspense postings for FTSP.

GVTS Payment Voucher Document (G1). Used to pay a third party vendor for ticket purchases used for Government travel.

GVTS Transportation Invoice Document (G2). Used to record travel-related data concerning ticket purchases made in FFIS.

GVTS Standard Voucher Document (G3). Used to reverse an agency's portion of the third party vendor invoice charged to the agency's clearing account.

MPOL No-Check Disbursement Document (DM). Used to record the disbursement information in FFIS by providing accounting data (i.e., accounting event, accounting classification codes, dollar amount, and object code), as well as, descriptive data elements to support agency and external reports.

MPOL Suspense Document (VM). Used to record information in FFIS by providing accounting data (i.e., accounting event, accounting classification codes, dollar amount, and object code), as well as, descriptive data elements to support agency and external reports.

PCMS Payment Voucher Document (V2). Used to post an expenditure and initiate a disbursement.

PCMS Standard Voucher Document (V5). Used to record post payment adjustments by the PCMS.

PCMS Standard Voucher Document (V6). Used to correct any change in the FFIS overall transaction

amount from the amount sent by PCMS. The V6 can only be entered by the RD Functional Administrator with the PCMS Functional Administrator.

PCMS Payment Voucher Document (V8). Used to replenish the Agency's clearing account (line 001 of the document) by charging the agency's accounting (lines 002–999 of the document).

PRCH Type 40 Receiver Document (EA). Used to record the receipt of goods or services in FFIS by providing accrual accounting data (i.e., General Ledger accounts, accounting event, accounting classification codes, dollar amount, and object code).

PRCH Miscellaneous Order Documents (GA, GC, GD). Used to record the accounting and budgetary impacts (obligation) for the order of goods and/or services in FFIS by providing accounting data (i.e., accounting event, accounting classification codes, dollar amount, and object code), as well as descriptive data elements to support agency and external reporting.

PRCH OPAC Payable Documents (KA, KD). Used to record OPAC disbursement information for payables to government entities in FFIS on a daily basis.

PRCH Standard Voucher Document (SP). Used to reverse the OPAC suspense originally recorded as OS. The SP is also used to post the gain or loss of assets from a trade-in on a daily basis in FFIS by providing accounting data (i.e., General Ledger accounts, accounting event, accounting classification codes, dollar amount, and object code).

PRCH Payment Voucher Documents (VA, VC, VD, VE). Used to record payment and disbursement information for payables to vendors and non-government entities in FFIS on a daily basis.

TELE Standard Voucher Document (SE). Used to record end-of-month accruals (i.e., accrued expenditures) and automatically reverse at the beginning of the next month.

TELE Payment Voucher Document (VT). Used to record authorization of payment to a vendor for goods and/or services accepted and invoiced.

TRAN Transportation Invoice Document (T1). Used to record common carrier expenditures as well as the payments to common carriers.

TRAN Travel Related Payment Voucher Document (T2). Used to record travel-related third party expenditures and generate payments.

TRVL Obligation Document (XO). Used to record the obligation/deobligation of travel expenses.

TRVL Travel Advance Document (XA). Used to issue travel advances.

TRVL Travel Voucher Document (Expenses) (XT). Used to record travel expenses, liquidate travel advances, apply amounts to outstanding travel bills of collection, and reimburse amounts owed to travelers for out-of-pocket expenses.

TRVL Third Party Payment Voucher Document (XP). Used to record the payment of third-party expenses for relocation vouchers.

TRVL Travel Voucher Document (Relocations) (XV). Used to record relocation expenses, liquidate relocation advances, apply amounts to outstanding travel bills of collection, and reimburse employees for out-of-pocket relocation expenses.

UTVN Accrual Document (SU). Used to record accrual information in FFIS by providing accounting data (i.e., accounting event, accounting classification codes, dollar amount, and object code).

UTVN Payment Voucher Document (UV). Used to record authorization of payment to a vendor for goods and/or services accepted and invoiced, to record revenue refunds, and to record balance sheet transfers.

Requisition Document (RQ)

The RQ is used to record a commitment and to enter the request for goods and/or services, including accounting and descriptive information related to a requisition, e.g., delivery location, delivery date, and requestor's name.

After the RQ is processed, you can view the results in the following tables:

- Requisition Header Inquiry and Requisition Accounting Line Inquiry Tables (REQH) (REQL)
- Budget Execution tables (ALOC, ALLT, SASP)
- General Ledger Balance Inquiry Table (GLBL)
- Document Cross Reference Inquiry Table (DXRF)

To access the RQ, at the FFS screen, key in ***L*** at the Action field and ***RQ*** at the TableID field. Use the [Space Bar] to erase the remaining 2 characters. Press [Enter]. The RQ (**Figure 4:5**) is displayed.

Detailed instructions for adding and modifying RQs are described below.

Adding/Modifying A Document. The RQ is used for entering data from annual estimates from the department, settlement agreements for compensatory damages, written agreements, and the following forms:

- AD–287, Employee Suggestion
- AD–287–2, Recommendation and Approval of Awards
- AD–343, Payroll Action Request
- AD–581, Lump-Sum Leave or Compensatory Time Payments
- AD–672, Reimbursement or Advance of Funds Agreement
- AD–700, Procurement Request
- FMS–195, Judgment Fund Payment Request (Admin. Award)
- FSA–875, Reimbursable Agreement
- SCA–4130, Employee Recognition Nomination and Approval
- SF–85, Data for Nonsensitive or Noncritical-Sensitive Positions
- SF–85P, Questionnaire for Public Trust Positions
- SF–86,Questionnaire for National Security Positions
- SF–182, Request, Authorization, Agreement and Certification of Training
- SF–1081, Voucher and Schedule of Withdrawals and Credits
- SF–1164, Claim for Reimbursement for Expenditures on Official Business

At the RQ screen, complete the fields as follows:

Command Fields

1 **Commnd** *(alpha field, 3 positions).*

ADD: *(no-entry).* ***New*** is system generated. Press [Tab].

MOD: *(conditional).* If the document currently resides in the Document Suspense File, key in ***Get*** and Press [Tab]. If the document has been archived (no longer in the Document Suspense File), see **Recreating An Archived Document** under **Processing In Documents** in **Part 2**.

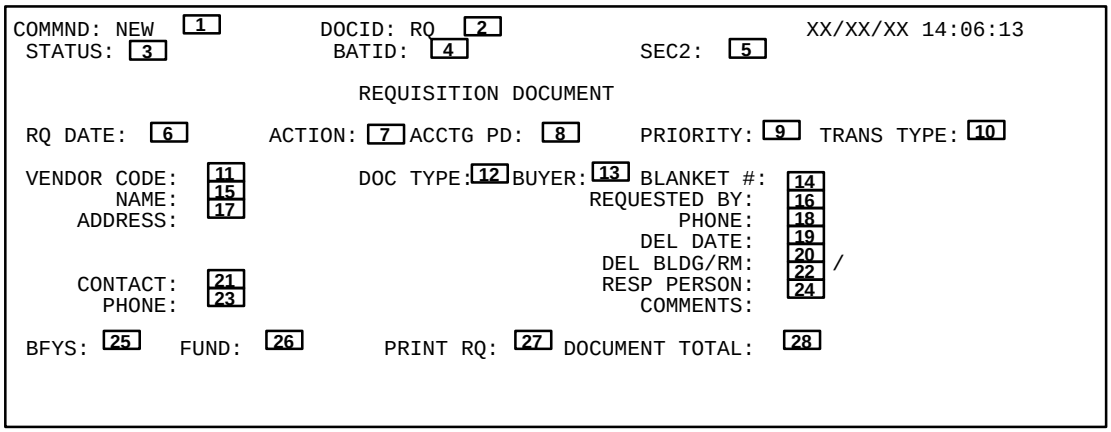

Figure 4:5. Requisition Document (RQ) header fields

Command Fields *(cont'd)*

2 **DocID** *(required, alphanumeric field; max. of 15 positions).*

ADD: At the system-generated transaction code (***RQ***), press [Tab]. Key in the sec1 code (i.e., the 2 position division code) and press [Tab]. Key in the Org. Code (5 positions). Press [#], then press [Enter]. Sequential numbers are generated in positions 10–15.

MOD: Key in the document identification of the original document. Press [Enter]. The selected document is displayed. Key in ***New*** at the Command field. Press [Tab] to move the cursor to the BatID field.

3 **Status** *(no-entry).* After the document is processed, this field displays the current status of the document.

4 **BatID** *(alphanumeric field, max. of 12 positions)*.

ADD: *(no-entry)*. This field is used only when modifying documents.

MOD: *(required).* Key in the transaction code (***RQ***) and press [Tab]. Key in the same sec1 code as entered on the original document and then key in the batch ID number *(max. of 6 positions)*. You may name the batch ID number as desired. Press [Enter].

The Batch Ticket screen is displayed. Press [Enter]. The new header screen is displayed. The cursor positions on the first header field.

5 **Sec2** *(no-entry).* The system generates the security code that is inferred from your user ID to verify your authority to create this document. This data is not displayed.

Note: For an RQ that does not have an order against it, you may modify all previously entered data except accounting information in the detail lines, and the payment amount if it has already been disbursed. A miscellaneous vendor entered in the vendor code can also be modified if the RQ doesn't have an order against it.

You can modify the document total, add/remove accounting lines, and increase or decrease the dollar amount on accounting lines. For an RQ that has an order against it, modifications are further limited based on the constraints of the obligation. For fields that cannot be modified, the system displays the applicable error message(s).

Header Fields

6 **RQ Date** *(optional default, numeric field; 6 positions).* Key in the date (*mmddyy*) of the document, usually the current date. It cannot be a future date. If left blank, the system defaults to the date the RQ is accepted by the system.

7 **Action** *(alpha field, 1 position).*

ADD: *(no-entry)*. The system generates ***E*** in this field when the document is edited.

MOD: *(required)*. Key in ***M*** to modify a document.

8 **Acctg Pd** *(optional default, numeric field; 4 positions).* Key in the open accounting period date *(mmyy)*. If left blank, the system defaults to the accounting period inferred from the document date in the Calendar Date Reference Table (CLDT), but it is not displayed. Note: The Acctg Pd refers to the fiscal month and year, e.g., November 2000 is 02 01. You can enter a future accounting period.

9 **Priority** *(optional default, numeric field; 2 positions).* Key in your priority for processing this requisition. If left blank, the system defaults to ***99***.

10 **Trans Type** *(numeric field, 2 positions).*

ADD: *(required).* Key in transaction type ***01***, which defines the appropriate accounting posting model for the document.

MOD: *(no-entry).* This field is system generated with data inferred from the original document.

11 **Vendor Code** *(required, alphanumeric field; max. of 11 positions).* Key in the vendor code for whom this requisition is placed. See the VEND for valid vendor codes. Miscellaneous vendor codes are permitted on the RQs when the vendor has not been selected. VEND or Vendor Name Inquiry Table (VNAM) may be searched for valid miscellaneous vendor codes.

12 **Doc Type** *(conditional, alpha field; 1 position).* If this commitment is placed against a blanket agreement, key in ***B.*** Otherwise, optional.

13 **Buyer** *(optional, alphanumeric field; 2 positions).* Key in the code of the buyer who is processing this requisition.

14 **Blanket#** *(conditional, numeric field; max. of 11 positions).* If the Doc Type (**Field 12**) is ***B***, indicating that this requisition is made against a blanket agreement, key in the number of the blanket agreement between the Government and the vendor which governs the terms of this requisition.

Header Fields *(cont'd)*

[15] **Name** *(conditional, alphanumeric field; max. of 30 positions).* If the vendor code that identifies this vendor is not in the VEND and the Vendor Code (**Field 11**) is blank or this is a miscellaneous (one-time) vendor or trial supplier, key in the vendor's name. Otherwise, the name is inferred from the VEND.

[16] **Requested By** *(optional, alphanumeric field; max. of 20 positions).* Key in the name of the person requesting the goods or services.

[17] **Address** *(conditional, alphanumeric field; max. of 30 positions).* If the vendor code that identifies this vendor is not in the VEND and the Vendor Code (**Field 11**) is blank or this is a miscellaneous (one-time) vendor or trial supplier, key in the vendor's address. Otherwise, the address is inferred from the VEND.

[18] **Phone** *(optional, numeric field; max. of 12 positions).* Key in the requester's telephone number, including the area code. Dashes may be entered.

[19] **Del Date** *(optional, numeric field; 6 positions).* Key in the date (*mmddyy*) the goods must be delivered.

[20] **Del Bldg/Rm** *(optional, alphanumeric field; max. of 10 positions).* Key in the building and room where the goods are to be delivered. See the Shipping Address Reference Table (SHIP) for valid entries.

[21] **Contact** *(conditional, alphanumeric field; max. of 30 positions).* If the vendor code represents a miscellaneous (one-time) vendor, key in the name of the person who may be contacted at the delivery point. Otherwise, the contact is inferred from the VEND.

[22] **Resp Person** *(optional, alphanumeric field; max. of 18 positions).* Key in the name of the person who may be contacted regarding the requisition.

[23] **Phone** *(optional default, numeric field; max. of 12 positions).* Key in the vendor's telephone number, including the area code. Dashes may be entered. If left blank, the system defaults to the telephone number in the VEND.

[24] **Comments** *(optional, alphanumeric field; max. of 12 positions).* Key in any pertinent information identifying the requisition.

[25] **BFYs** *(no-entry).* Leave blank.

[26] **Fund** *(no-entry).* Leave blank.

[27] **Print RQ** *(optional default, alpha field; 1 position).* Key in ***Y*** to print this requisition or ***N*** not to print this requisition. If left blank, the system defaults to the value in the Print field in the Transaction Category Reference Table (TCAT).

[28] **Document Total** *(required, numeric field; max. of 15 positions).*

ADD: Key in the total amount for this requisition. The amount should be entered in dollars and cents (e.g., ***13.50***).

MOD: This entry should reflect the total amount of this transaction not the total amount of the existing requisition. Key in the total net amount of all modified accounting lines for this requisition. (For example, if the current requisition is ***50*** but it should be ***60***, key in ***10***.)

After completing the header fields, press [Enter]. Complete the line fields (**Figure 4:6**) as described below.

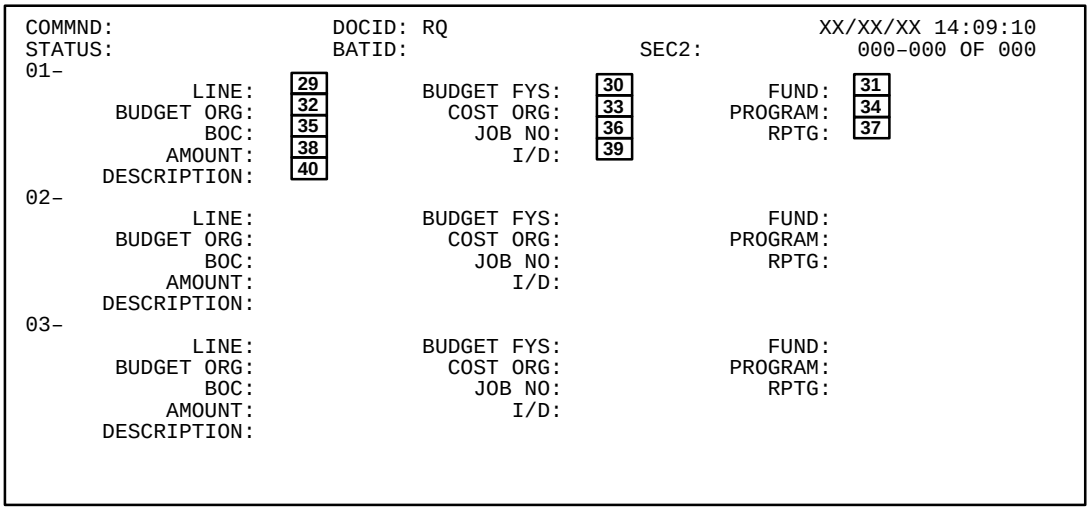

Figure 4:6. Requisition Document (RQ) line fields

Line Fields

29 **Line** *(required, numeric field; 3 positions).*

ADD: Key in the number for each accounting line from ***001*** to ***999***. (A single accounting line may be used to provide funding for multiple lines.)

MOD: Key in the number of the accounting line to be modified or key in a new line to be added.

30 **Budget FYs** *(no-entry)*. Leave blank. The budget fiscal year is derived from the Default Values Reference Table (DVAL).

31 **Fund** *(no-entry)*. Leave blank. The fund is derived from the DVAL.

32 **Budget Org** *(no-entry).* Leave blank. The budget organization is derived from the DVAL.

33 **Cost Org** *(no-entry)*. Leave blank. This field is not used by RD.

34 **Program** *(required, alphanumeric field; 9 positions)*.

ADD: Key in the 9-position ACCS code. See the Program Reference Table (PGMT) for code verification.

MOD: The existing field can only be modified if an obligation has not been established. You must enter the original line number, then enter the total amount of the original line in the amount field and D in the I/D field. Press [Tab] and create a new line by assigning a new line number, or the same line number, and enter the data in the Program, BOC, and Amount fields.

35 **BOC** *(required, numeric field; 4 positions).*

ADD: Key in the budget object classification code. See the Budget Object Code Reference Table (BOCT) for valid code.

MOD: If an obligation has not been established, you must enter the original line number, then enter the total amount of the original line in the amount field and D in the I/D field. Press [Tab] and create a new line by assigning a new line number, or the same line number, and enter the data in the Program, BOC, and Amount fields.

36 **Job No** *(no-entry).* This field is not used by RD.

37 **Rptg** *(no-entry)*. Leave blank. The reporting category is derived from the DVAL and contains the 2-position special purpose code.

38 **Amount** *(required, numeric field; max. of 15 positions)*.

ADD: Key in the line amount. The amount should be entered in dollars and cents (e.g., ***13.50***).

MOD: Key in the amount by which to increase or decrease the line to be modified (e.g., if the current requisition line amount is ***10*** but it should be ***15***, key in ***5***) or key in the amount for the new line that is being added.

39 **I/D** *(alpha field, 1 position).*

ADD: *(no-entry)*. This field is used only when modifying documents.

MOD: *(optional default)*. If the amount of an existing line is modified, key in one of the following:

I = Increase the amount (e.g., if the current requisition line amount is ***10*** but it should be ***15***, key in ***I*** in I/D field)

D = Decrease the amount

If left blank, the system defaults to ***I***.

40 **Description** *(optional, alphanumeric field; max. of 30 positions)*. Key in any information to identify this line amount.

If additional accounting lines are needed, press [Tab] to place the cursor in the next line field. If the user has more than three lines of accounting, press [Enter]. The line screen is refreshed. Key in the line number (up to 999 lines can be entered).

After Completing The Fields

Follow the steps below to edit and process the data:

1. At the Command field, key in ***E*** (edit, for the Add action) or ***EB*** (edit batch, for the Modify action).

2. Press [Enter] to edit the data. If errors are detected, error messages are displayed at the bottom of the screen. All fatal errors must be corrected before the database is updated. For more information about error messages and correcting errors, see **Part 2, System Edits**.

3. After the data passes system edits, process the document as described:

- For the **Add** action, key in ***R*** (run) at the Command field. Press [Enter]. The document status is displayed.

OR

- For the **Modify** action, the Batch Ticket screen is displayed. The message *No Error Detected* is displayed at the bottom of the screen. Key in ***RB*** (run batch) in the Command field. Press [Enter]. The message *All Documents Accepted* is displayed at the bottom of the Batch Ticket screen.

Performing Other Actions. For general instructions on canceling and deleting documents, see **Part 2, Using Documents**.

Miscellaneous Order Document (MO)

The MO is used to directly enter obligation information prior to receipt of goods and/or services being rendered.

After the MO is processed, you can view the results in the following tables:

- Orders Header Inquiry and Purchase Order Accounting Line Inquiry Tables (OBLH, OBLL)
- Requisition Header Inquiry and Requisition Accounting Line Inquiry Tables (REQH, REQL)
- Budget Execution tables (ALOC, ALLT, SASP)
- General Ledger Balance Inquiry Table (GLBL)
- Document Cross Reference Inquiry Table (DXRF)

To access the MO, at the FFS screen, key in ***L*** at the Action field and ***MO*** at the TableID field. Use the [Space Bar] to erase the remaining 2 characters. Press [Enter]. The MO (**Figure 4:7**) is displayed.

Detailed instructions for adding and modifying MOs are described below.

Adding/Modifying A Document. The MO is used for entering data from the following forms:

- AD–633, Multi-use Standard Requisitioning/Issue Document
- AD–673, Request to Bill
- GSA–2511, Print Order
- GSA–50, Requisition for Reproduction Services
- GSA–2957, Reimbursable Work Authorization
- RECD–300–70, Request for Photocopying Services
- SF–1, Printing and Binding Requisition to the Public Printer
- SF–1081, Voucher and Schedule of Withdrawals and Credits

At the MO screen, complete the fields as follows:

Command Fields

[1] **Commnd** *(alpha field, 3 positions).*

ADD: *(no-entry).* ***New*** is system generated. Press [Tab].

MOD: *(conditional).* If the document currently resides in the Document Suspense File, key in ***Get*** and Press [Tab]. If the document has been archived (no longer in the Document Suspense File), see **Recreating An Archived Document** under **Processing In documents** in **Part 2**.

[2] **DocID** *(required, alphanumeric field; max. of 15 positions).*

ADD: At the system-generated transaction code (***MO***), press [Tab]. Key in the sec1 code (i.e., the 2 position division code) and press [Tab]. Key in the Org. Code (5 positions). Press [#], then press [Enter]. Sequential numbers are generated in positions 10–15.

MOD: Key in the document identification of the original document. Press [Enter]. The selected document is displayed. Key in ***New*** at the Command field. Press [Tab] to move the cursor to the BatID field.

[3] **Status** *(no-entry).* After the document is processed, this field displays the current status of the document.

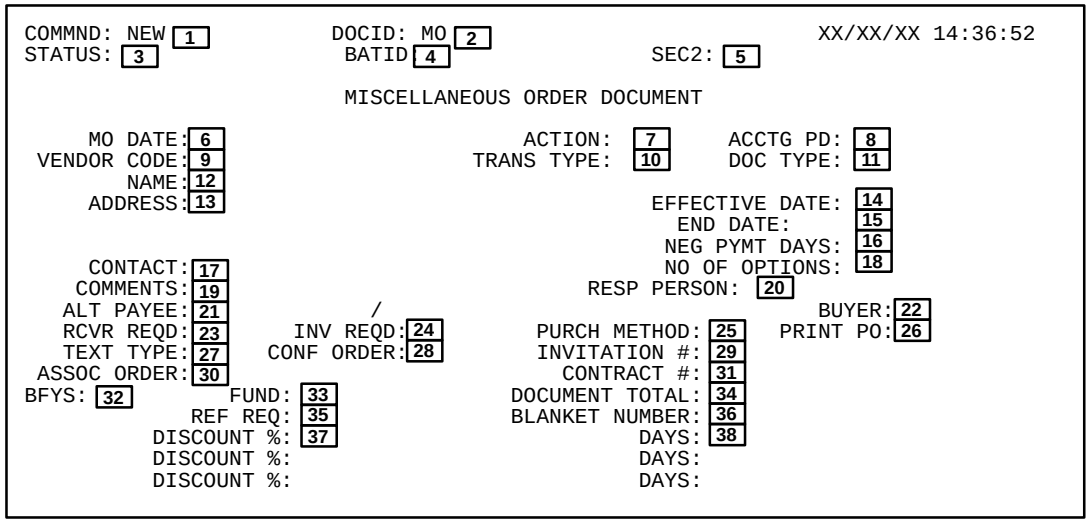

Figure 4:7. Miscellaneous Order Document (MO) header fields

Command Fields *(cont'd)*

[4] **BatID** *(alphanumeric field, max. of 12 positions)*.

ADD: *(no-entry)*. This field is used only when modifying documents.

MOD: *(required).* Key in the transaction code (***MO***) and press [Tab]. Key in the same sec1 code as entered on the original document and then key in the batch ID number (*max. of 6 positions)*. You may name the batch ID number as desired. Press [Enter].

The Batch Ticket screen is displayed. Press [Enter]. The new header screen is displayed. The cursor positions on the first header field.

[5] **Sec2** *(no-entry).* The system generates the security code that is inferred from your user ID to verify your authority to create this document. This data is not displayed.

Note: For an MO that does not have an order against it, you may modify all previously entered data except the vendor code, unless it was a miscellaneous vendor; accounting information in the detail lines; or the payment amount if it has already been disbursed. You can modify the document total, add/remove accounting lines, and increase or decrease the dollar amount on accounting lines. For an MO that has an order against it, modifications are further limited based on the constraints of the obligation. For fields that cannot be modified, the system displays the applicable error message(s).

Header Fields

[6] **MO Date** *(optional default, numeric field; 6 positions).* Key in the date (*mmddyy*) of the document, usually the current date. It cannot be a future date. For OPAC payments, use the date the order was placed. If left blank, the system defaults to the date the ***MO*** is accepted by the system.

Note: On MOs for OPAC payments, the MO date must be a date prior to OPAC acceptance date, or the DD will reject. Therefore, the agency must use the date the order was placed.

[7] **Action** *(alpha field, 1 position).*

ADD: *(no-entry)*. The system generates ***E*** in this field when the document is edited.

MOD: *(required)*. Key in ***M*** to modify a document.

[8] **Acctg Pd** *(optional default, numeric field; 4 positions).* Key in the open accounting period date (*mmyy)*. If left blank, the system defaults to the accounting period inferred from the document date in the CLDT, but it is not displayed. Note: The Acctg Pd refers to the fiscal month and year, e.g., November 2000 is 02 01. You cannot enter a future accounting period.

[9] **Vendor Code** *(alphanumeric field, max. of 11 positions)*. Note: A valid vendor code is required. A miscellaneous vendor code is not allowed.

ADD: *(required)*. Key in the vendor code, if known. If not known, see the VEND for valid vendor codes. Note: For OPAC, the vendor code is the vendor's ALC followed by FOA.

MOD: *(no-entry).* The vendor code as indicated on the original order cannot be changed.

Note: For OPAC, the vendor code is the vendor's ALC followed by FOA.

[10] **Trans Type** *(numeric field, 2 positions).*

ADD: *(required).* Key in transaction type of ***01*** which is used to obligate for contract obligations, lease agreements, equipment rentals, OPAC transactions, damages to land, and the approval of grants.

MOD: *(no-entry).* This field is system generated with data inferred from the original document.

[11] **Doc Type** *(alphanumeric field, 1 position).*

ADD: *(conditional).* If the MO is for a BPA, key in ***B*** (blanket purchase agreement). Otherwise, enter any RD-defined value which may be used to define this order.

MOD: *(no-entry).* The document type as indicated on the original order cannot be changed.

[12] **Name** *(no-entry)*. The name is inferred from the VEND based on entry in the Vendor Code field.

[13] **Address** *(no-entry)*. The address is inferred from the VEND based on entry in the Vendor Code field.

[14] **Effective Date** *(optional default, numeric field; 6 positions).* Key in the beginning date (*mmddyy*) of the order. If left blank, the system defaults to the document date.

Header Fields *(cont'd)*

[15] **End Date** *(optional, numeric field; 6 positions).* Key in the ending date (*mmddyy*) of the order.

[16] **Neg Pymt Days** *(optional default, numeric field; max. of 2 positions).* Key in the number of days negotiated to pay the obligation after the invoice is received. If left blank, the system defaults to ***0*** (zero).

[17] **Contact** *(optional default, alphanumeric field; max. of 30 positions).* Key in the name of the person representing the vendor. If left blank, the system defaults to the contact in the VEND.

[18] **No of Options** *(optional, alphanumeric field; max. of 2 positions).* Key in the number of years this contract can be renewed (whole numbers only).

[19] **Comments** *(optional, alphanumeric field; max. of 12 positions).* Key in any pertinent information identifying the order.

[20] **Resp Person** *(optional, alphanumeric field; max. of 15 positions).* Key in the name of the person who may be contacted regarding the order.

[21] **Alt Payee** *(optional, alphanumeric field; max. of 11 positions).* Key in the code of the vendor who may be used as an alternate payee. See the VEND for valid vendor codes.

[22] **Buyer** *(optional, alphanumeric field; 2 positions).* Key in the code of the buyer processing this order.

[23] **Rcvr Reqd** *(optional default, alpha field; 1 position).* Key in one of the following:

Y = To indicate that a receipt is required.

N = To indicate that a receipt is not required.

If left blank, the system defaults to the value of the Misc Order Requires Receiver field in the System Control Options Reference Table (SOPT).

[24] **Inv Reqd** *(optional default, alpha field; 1 position).* Key in one of the following:

Y = To indicate that an invoice is required.

N = To indicate that an invoice is not required.

If left blank, the system defaults to the value of the Misc Order Requires Vndr Invc field in the SOPT.

[25] **Purch Method** *(optional, numeric field; 1 position).* Key in the appropriate code for the type of purchase order being entered.

[26] **Print Po** *(optional default, alpha field; 1 position).* Key in one of the following:

Y = Print this order

N = Do not print this order

If left blank, the system defaults to the value in the Print field in the TCAT.

[27] **Text Type** *(optional, numeric field; 2 positions).* Key in a valid text type from the Text Type Reference Table (TXTP). The text type specifies a standard clause or set of standard clauses to be printed on the purchase order. The text type entered is associated with the document as a whole.

[28] **Conf Order** *(optional default, alpha field; 1 position).* Key in ***Y*** if this is a confirming order, in which case the purchase order printing program will print *Confirming Order* on the purchase order. Otherwise, key in ***N***. If left blank, the system defaults to ***N***.

[29] **Invitation #** *(optional, numeric field; max. of 10 positions).* Key in the invitation number used in contract bidding.

[30] **Assoc Order** *(optional, alphanumeric field; max. of 13 positions).* Key in the transaction code and document number of an associated recurring order.

[31] **Contract #** *(optional, numeric field; max. of 15 positions).* Key in the contract number for this order.

[32] **BFYs** *(no-entry)*. Leave blank.

[33] **Fund** *(no-entry).* Leave blank.

[34] **Document Total** *(required, numeric field; max. of 15 positions).*

ADD: Key in the total net amount for this order. The amount should be entered in dollars and cents (e.g., ***13.50***).

MOD: This entry should reflect the total amount of this transaction not the total amount of the existing obligation. Key in the total net amount of all modified accounting lines for this order. For example, if the current order is ***50.00*** but it should be ***40.00***, key in ***10.00***.

[35] **Ref Req** *(required, alphanumeric field; max. of 13 positions).* Key in the transaction code and document number of the requisition being referenced.

Header Fields *(cont'd)*

[36] **Blanket Number** *(conditional, numeric field; max. of 11 positions).* If the Doc Type (**Field 11**) is ***B***, indicating an order against a blanket agreement, key in the blanket agreement number between the Government and the vendor which governs the terms of this order. Otherwise, optional.

[37] **Discount %** *(optional, numeric field; max. of 6 positions).* Key in the percentage of discount with three decimal places (e.g., ***99*** or ***99.999***).

[38] **Days** *(conditional, numeric field; 2 positions).* If the discount percentage is entered, key in the number of days the discount is applicable. Otherwise, not allowed.

After completing the header fields, press [Enter]. Complete the line fields (**Figure 4:8**) as described below.

Line Fields

[39] **Line** *(required, numeric field; 3 positions).*

ADD: Key in the number for each accounting line from ***001*** to ***999***. (A single accounting line may be used to provide funding for multiple commodity lines.)

MOD: Key in the number of the accounting line to be modified or key in a new line to be added.

[40] **Ref Req–Line** *(numeric field, max. of 13 positions).*

ADD: *(required).* Key in the transaction code, document number, and reference line number for the requisition being referenced.

Note: When a requisition is referenced, data is only required in the amount field and the P/F field because all other information will be populated in the appropriate fields after the document is edited.

MOD: *(no-entry).* This field cannot be modified.

[41] **Budget FYs** *(no-entry)* Leave blank. The budget fiscal year is derived from the DVAL.

[42] **Fund** *(no-entry)*. Leave blank. The fund is derived from the DVAL.

[43] **Budget Org** *(no-entry).* Leave blank. The budget organization is derived from the DVAL.

[44] **Budget Sub** *(no-entry).*This field is not used by RD.

[45] **Cost Org** *(no-entry)*. This field is not used by RD.

[46] **Cost Sub** (*no-entry*). This field is not used by RD.

[47] **Pgm** *(required, numeric field; 9 positions).*

ADD: *(no-entry)*. In the Ref Req-Line (**Field 40**), the program code is inferred from that document.

MOD: If adding a new line, key in the program code. The existing field can only be modified if an order has not been placed against the line.

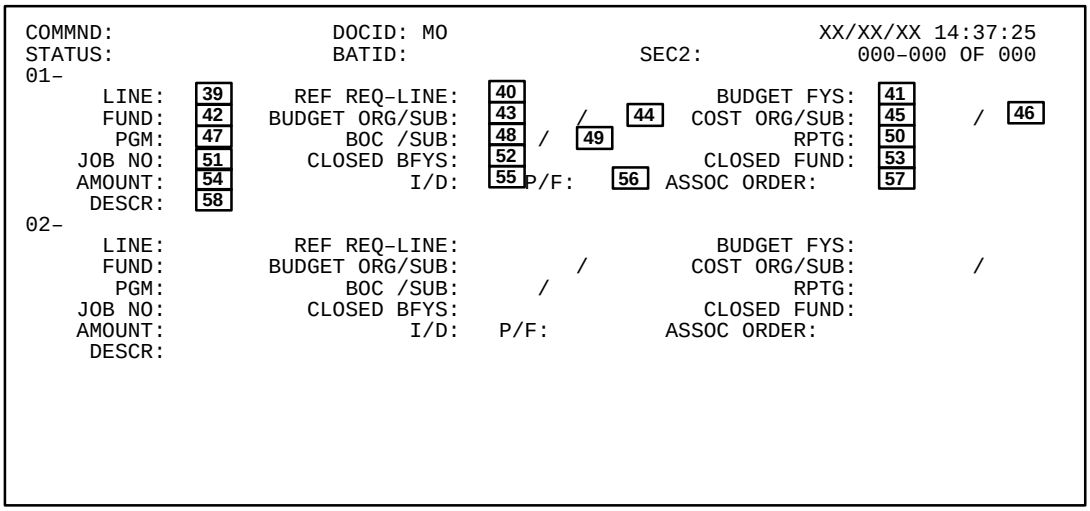

Figure 4:8. Miscellaneous Order Document (MO) line fields

Line Fields *(cont'd)*

48 **BOC** *(numeric field; 4 positions).*

ADD: *(no-entry).* The code is inferred from the reference document. See the BOCT for valid budget object codes.

MOD: *(conditional).* If an obligation has not been established, you must enter the original line number, then enter the total amount of the original line in the amount field and D in the I/D field. Press [Tab] and create a new line by assigning a new line number, or the same line number, and enter the data in the Program, BOC, and Amount fields.

49 **Sub** *(no-entry).* This field is not used by RD.

50 **Rptg** *(no-entry).* Leave blank. The reporting category code is derived from the DVAL and contains the 2-position special purpose code.

51 **Job No** *(no-entry).* This field is not used by RD.

52 **Closed BFYs** *(no-entry).* Leave blank.

53 **Closed Fund** *(no-entry).* Leave blank.

54 **Amount** *(required, numeric field; max. of 15 positions).*

ADD: Key in the line amount. The amount should be entered in dollars and cents (e.g., ***13.50***).

MOD: Key in the amount by which to increase or decrease the line to be modified or key in the amount for the new line that is being added. For example, if the current order line amount is ***50.00*** and it should be ***40.00***, key in ***10.00***.

55 **I/D** *(alpha field, 1 position).*

ADD: *(no-entry)*. This field is used only when modifying documents.

MOD: *(optional default)*. If the amount of an existing line is modified, key in one of the following:

I = Increase the amount
D = Decrease the amount

If left blank, the system defaults to ***I***.

56 **P/F** *(required, alpha field; 1 position).*

ADD: Key in one of the following to indicate whether the requisition should be partially or fully liquidated:

P = Partial order
F = Final order

MOD: If adding a new line, key in one of the following:

P = Partial order
F = Final order

If this line amount causes the order amount to exceed the requisition amount, you must key in ***F***.

57 **Assoc Order** *(no-entry)*. This field is not used by RD.

58 **Descr** *(optional, alphanumeric field; max. of 31 positions).* Key in any pertinent information to identify this line amount.

After Completing The Fields

Follow the steps below to edit and process the data:

1. At the Command field, key in ***E*** (edit, for the Add action) or ***EB*** (edit batch, for the Modify action).

2. Press [Enter] to edit the data. If errors are detected, error messages are displayed at the bottom of the screen. All fatal errors must be corrected before the database is updated. For more information about error messages and correcting errors, see **Part 2, System Edits**.

3. After the data passes system edits, process the document as described:

- For the **Add** action, key in ***R*** (run) at the Command field. Press [Enter]. The document status is displayed.

OR

- For the **Modify** action, the Batch Ticket screen is displayed. The message *No Error Detected* is displayed at the bottom of the screen. Key in ***RB*** (run batch) in the Command field. Press [Enter]. The message *All Documents Accepted* is displayed at the bottom of the Batch Ticket screen.

Performing Other Actions. For general instructions on canceling and deleting documents, see **Part 2, Using Documents**.

Direct Disbursement Document (DD)

The DD is used to record disbursements for events between agencies (interfund transfers). This document is used only by NFC personnel responsible for processing OPAC transactions.

After the DD is processed, you may be able to view the results in the following tables:

- Requisition Header Inquiry and Requisition Accounting Line Inquiry Tables (REQH, REQL)
- Orders Header Inquiry and Purchase Order Accounting Line Inquiry Tables (OBLH, OBLL)
- Voucher Header Inquiry and Voucher Line Inquiry Tables (PVHT, PVLT)
- Vendor Name Inquiry Table (VNAM)
- Budget Execution tables (ALOC, ALLT, SASP)
- General Ledger Balance Inquiry Table (GLBL)
- Payment Voucher Disbursement Cross Reference Table (VXDD)
- Vendor Reference Table (VEND)
- Treasury Schedule Header and Line Tables (TSCH, TSCL)
- Document Tracking tables (DCTE, DCTI)

To access the DD, at the FFS screen, key in ***L*** at the Action field and ***DD*** at the TableID field. Use the [Space Bar] to erase the remaining 2 characters. Press [Enter]. The DD (**Figure 4:9**) is displayed.

Detailed instructions for adding and modifying DDs are described below.

Adding/Modifying A Document. The DD is used for entering data from invoices, OPAC bills from Treasury, approval at the Departmental level, and from the form AD–673, Request to Bill.

At the DD screen, complete the fields as follows:

Command Fields

1 **Commnd** *(alpha field, 3 positions).*

ADD: *(no-entry).* ***New*** is system generated. Press [Tab].

MOD: *(conditional).* If the document currently resides in the Document Suspense File, key in ***Get*** and press [Tab]. If the document has been archived (no longer in the Document Suspense File) see **Recreating An Archived Document** under **Processing In Documents** in **Part 2**.

2 **DocID** *(required, alphanumeric field; max. of 15 positions).*

ADD: At the system-generated transaction code (***DD***), press [Tab]. Key in the sec1 code (i.e., the 2 position division code) and press [Tab]. Key in the Org. Code (5 positions). Press [#], then press [Enter]. Sequential numbers are generated in positions 10–15.

MOD: Key in the document identification of the original document. Press [Enter]. The selected document is displayed. Key in ***New*** at the Command field. Press [Tab] to move the cursor to the BatID field.

3 **Status** *(no-entry).* After the document is processed, this field displays the current status of the document.

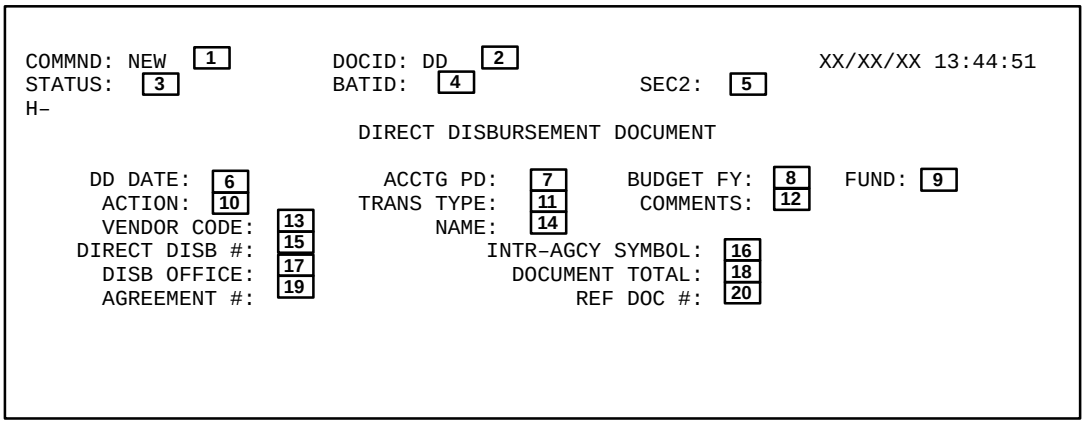

Figure 4:9. Direct Disbursement Document (DD) header fields

Command Fields *(cont'd)*

4 **BatID** *(alphanumeric field, max. of 12 positions)*.

ADD: *(no-entry)*. This field is used only when modifying documents.

MOD: *(required)*. Key in the transaction code (***DD***) and press [Tab]. Key in the same sec1 code as entered on the original document and then key in the batch ID number *(max. of 6 positions)*. You may name the batch ID number as desired. Press [Enter].

The Batch Ticket screen is displayed. Press [Enter]. The new header screen is displayed. The cursor positions on the first header field.

5 **Sec2** *(no-entry)*. The system generates the security code that is inferred from your user ID to verify your authority to create this document. This data is not displayed.

Header Fields

6 **DD Date** *(required, numeric field; 6 positions)*. Key in the accomplish date (*mmddyy*) of the OPAC bill.

7 **Acctg Pd** *(optional default, numeric field; 4 positions)*. Key in the open accounting period date (*mmyy*). If left blank, the system defaults to the accounting period inferred from the document date in the CLDT.

8 **Budget FYs** *(no-entry)*. Leave blank.

9 **Fund** *(no-entry)*. Leave blank.

10 **Action** *(alpha field, 1 position)*.

ADD: *(no-entry)*. The system generates ***E*** in this field when the document is edited.

MOD: *(required)*. Key in ***M*** to modify a document.

11 **Trans Type** *(alpha field, 2 positions)*.

ADD: *(required)*. Key in the transaction type (***OP***) which is used in conjunction with an OPAC transaction.

MOD: *(no-entry)*. This field is system generated with data inferred from the original document.

12 **Comments** *(optional, alphanumeric field; max. of 12 positions)*. Key in notes about this document.

13 **Vendor Code** *(required, alphanumeric field; 11 positions)*. Key in the vendor code. The vendor code is represented by the billing ALC followed by ***FO*** and an ***A***.

14 **Name** *(no-entry)*. This field is system generated from the VEND based on the vendor code entered in **Field 13**.

15 **Direct Disb #** *(required, numeric field; 6 positions)*. Key in the last 6 positions of the OPAC bill number.

16 **Intr-Agcy Symbol** *(no-entry)*. This field is not used by RD.

17 **Disb Office** *(required, numeric field; 2 positions)*. Key in the disbursing office code for OPAC.

18 **Document Total** *(required, numeric field; max. of 15 positions)*. Key in the total of the OPAC bill.

19 **Agreement #** *(no-entry)*. This field is not used by RD.

```
COMMND:                DOCID: DD                          XX/XX/XX 13:48:26
STATUS:                BATID:                SEC2:           000-000 OF 000
01-
    LINE #: 21 REF DOC #: 22          REF DOC LINE: 23 ACCP DATE: 24
    VENDOR INV #/LINE: 25 26        INV DATE: 27         LOG DATE: 28
      TRANS TYPE: 29 BFY: 30   FUND: 31     BUDGET ORG/SUB: 32 33
    COST ORG/SUB: 34 35     PROGRAM: 36            BOC/SUB: 37 38
      JOB NUMBER: 39           RPTG: 40       GL ACCOUNT: 41
    REV SRCE/SUB: 42 43 CLOSED BFYS: 44       CLOSED FUND: 45
     DESCRIPTION: 46
      INT REASON: 47          AMOUNT: 48              I/D: 49 P/F: 50
        QUANTITY: 51             ADV: 52
    OUTS REF AMT: 53
```

Figure 4:10. Direct Disbursement Document (DD) line fields

Header Fields *(cont'd)*

20 **Ref Doc #** *(no-entry)*. This field is not used by RD.

After completing the header fields, press [Enter]. Complete the line fields (**Figure 4:10**) as described below.

Line Fields

21 **Line #** *(required, numeric field; 3 positions).*

ADD: Key in a number from ***001*** to ***999*** for each accounting line. (A single accounting line may be used to provide funding for multiple commodity lines.)

MOD: Key in the number of the accounting line to be modified or key in a new line to be added.

22 **Ref Doc #** *(required, alphanumeric field; 13 positions).* Key in the transaction code and the document reference number.

23 **Ref Doc Line** *(required, numeric field; 3 positions).* Key in the reference document line.

24 **Accp Date** *(no-entry).* This field is not used by RD.

25 **Vendor Inv #** *(no-entry).* This field is not used by RD.

26 **Vendor Inv Line** *(no-entry).* This field is not used by RD.

27 **Inv Date** *(no-entry)*. This field is not used by RD.

28 **Log Date** *(no-entry).* This field is not used by RD.

29 **Trans Type** *(conditional, alpha field; 2 positions*). If the Trans Type (**Field 11**) is not entered in the document header, key in the transaction type ***OP*** which is used for OPAC disbursed payments for goods and/or services. Otherwise, optional.

30 **BFY** *(no-entry).* Leave blank. The budget fiscal year is derived from the DVAL.

31 **Fund** *(no-entry).* Leave blank. The fund code is derived from the DVAL.

32 **Budget Org** *(no-entry)*. Leave blank. The budget organization code is derived from the DVAL.

33 **Budget Sub** *(no-entry).*This field is not used by RD.

34 **Cost Org** *(no-entry).* This field is not used by RD.

35 **Cost Sub** (*no-entry*). This field is not used by RD.

36 **Program** *(no-entry).*Leave blank. The 9-position ACCS code is inferred from the reference document.

37 **BOC** *(no-entry)*. Leave blank. The code is inferred from the reference document.

38 **Sub** *(no-entry).* This field is not used by RD.

39 **Job Number** *(no-entry)*. This field is not used by RD.

40 **Rptg** *(no-entry).* Leave blank. The reporting category code is derived from the DVAL and contains the 2-position special purpose code.

41 **GL Account** *(no-entry).* This field is not used by RD.

42 **Rev Srce** *(no-entry).* This field is not used by RD.

43 **Sub Rev** *(no-entry).*This field is not used by RD.

44 **Closed BFYs** *(no-entry).* Leave blank.

45 **Closed Fund** *(no-entry).* Leave blank.

46 **Description** *(optional, alphanumeric field; max. of 30 positions).* Key in notes about this line.

47 **Int Reason** *(no-entry).* This field is not used by RD.

48 **Amount** *(required, numeric field; max. of 15 positions)*.

ADD: Key in the dollar amount. The amount should be entered in dollars and cents (e.g., ***13.50***).

MOD: Key in the amount by which to increase or decrease the line to be modified (e.g., if the current requisition line amount is ***10*** but it should be ***15***, key in ***5***) or key in the amount for the new line that is being added.

49 **I/D** *(optional default, alpha field; 1 position)*.

ADD: Key in ***D*** (decrease) if adding a credit. If left blank, the system defaults to ***I*** (increase).

MOD: If this is a modification to a previously accepted document, key in one of the following:

I = Increase the amount

D = Decrease the amount

If left blank, the system defaults to ***I***. Note: If the document total on the header screen is *0.00*, leave blank.

50 **P/F** *(required, alpha field; 1 position).* Key in one of the following:

P = Partial payment

F = Final payment

Line Fields *(cont'd)*

51 **Quantity** *(no-entry).* This field is not used by RD.

52 **Adv** *(no-entry).* This field is not used by RD.

53 **Outs Ref Amt** *(no-entry).* This field is not used by RD.

After Completing The Fields

Follow the steps below to edit and process the data:

1. At the Command field, key in ***E*** (edit, for the Add action) or ***EB*** (edit batch, for the Modify action).

2. Press [Enter] to edit the data. If errors are detected, error messages are displayed at the bottom of the screen. All fatal errors must be corrected before the database is updated. For more information about error messages and correcting errors, see **Part 2, System Edits**.

3. After the data passes system edits, process the document as described:

- For the **Add** action, key in ***R*** (run) at the Command field. Press [Enter]. The document status is displayed.

OR

- For the **Modify** action, the Batch Ticket screen is displayed. The message *No Error Detected* is displayed at the bottom of the screen. Key in ***RB*** (run batch) in the Command field. Press [Enter]. The message *All Documents Accepted* is displayed at the bottom of the Batch Ticket screen.

Performing Other Actions. For general instructions on canceling and deleting documents, see **Part 2, Using Documents**.

Payment Voucher Document (PV)

The PV is used to record authorization of payment (Treasury check or EFT disbursement) to a vendor for goods and/or services accepted and invoiced, to record revenue refunds, and to record balance sheet transfers.

After the PV is processed, you may be able to view the results in the following tables:

- Voucher Header Inquiry and Voucher Line Inquiry Tables (PVHT, PVLT)
- Voucher Holdback Inquiry Table (PVCH)
- Voucher Tracking Inquiry Table (VCTI)
- Treasury Schedule Control Header and Treasury Schedule Control Line Inquiry Tables (TSCH, TSCL)
- Payment Voucher Line–Disb Document Cross Reference Inquiry Table (VXDD)
- Requisition Header Inquiry and Requisition Accounting Line Inquiry Tables (REQH, REQL)
- Orders Header Inquiry and Purchase Order Accounting Line Inquiry Tables (OBLH, OBLL)
- Budget Execution tables (ALOC, ALLT, SASP)
- General Ledger Balance Inquiry Table (GLBL)
- Document Cross Reference Inquiry Table (DXRF)

To access the PV, at the FFS screen, key in ***L*** at the Action field and ***PV*** at the TableID field. Use the [Space Bar] to erase the remaining 2 characters. Press [Enter]. The PV (**Figure 4:11**) is displayed.

Detailed instructions for adding and modifying PVs are described below.

Adding/Modifying A Document. The PV is used for entering data from invoices, budget generated payment forms, and from the following forms:

- SF–182, Request, Authorization, Agreement, and Certification of Training
- SF–1081, Voucher and Schedule of Withdrawals and Credits
- FMS–196, Judgment Fund Award Data Sheet
- FMS–197, Voucher for Payment Where a Settlement Agreement Has *Not* Been Executed and Attached or Where a Final Judgment is *Not* Attached

At the PV screen, complete the fields as follows:

Command Fields

1 **Commnd** *(alpha field, 3 positions).*

ADD: *(no-entry).* ***New*** is system generated. Press [Tab].

MOD: *(conditional).* If the document currently resides in the Document Suspense File, key in ***Get*** and press [Tab]. If the document has been archived (no longer in the Document Suspense File), see **Recreating An Archived Document** under **Processing In Documents** in **Part 2.**

2 **DocID** *(required, alphanumeric field; max. of 15 positions).*

ADD: At the system-generated transaction code (***PV***), press [Tab]. Key in the sec1 code (i.e., the 2 position division code) and press [Tab]. Key in the Org. Code (5 positions). Press [#], then press [Enter]. Sequential numbers are generated in positions 10–15.

MOD: Key in the document identification of the original document. Press [Enter]. The selected document is displayed. Key in ***New*** at the Command field. Press [Tab] to move the cursor to the BatID field.

3 **Status** *(no-entry).* After the document is processed, this field displays the current status of the document.

```
COMMND: NEW  1        DOCID: PV  2                          XX/XX/XX 16:18:46
STATUS:  3            BATID:  4            SEC2:  5
H-
                          PAYMENT VOUCHER DOCUMENT

   PV DATE:   6        ACCTG PD:   7     BUDGET FY:   8   FUND:    9
      ACTION: 10       TRANS TYPE: 11 PROMPT PAY TYPE: 12 PV TYPE: 13
  SCHED PYMT DATE: 14      DESCR: 15          D.O: 16   FA IND:  17
        REF DOC #: 18                                  ACCP/DEL DATE: 19
     VENDOR INV #: 20                  INV DATE: 21     LOG DATE: 22
  FY:23   SCHEDULE CAT: 24     SCHEDULE TYP: 25  SCHEDULE NUMBER: 26
  PAYMENT CAT: 27  OFFSET ELIGIBILITY: 28
  VENDOR CODE: 29                              DOCUMENT TOTAL: 30
         NAME: 31                                 AGREEMENT #: 32
    ADDRESS1: 33                                HOLDBACK TOT: 34
            2:                                 PMT SEQUENCE #: 35
            3:                                     INT REASON: 36
   CHECK TYPE: 37  AGENCY HEAD APPROVAL 38  DISC LOST REASON: 39
   DISCOUNT %: 40            / AMOUNT 41            DAYS:  42
   DISCOUNT %:               / AMOUNT:              DAYS:
   DISCOUNT %:               / AMOUNT:              DAYS:
  COMMENTS TO PRINT: 43
```

Figure 4:11. Payment Voucher Document (PV) header fields

Command Fields *(cont'd)*

4 **BatID** *(alphanumeric field, max. of 12 positions)*.

ADD: *(no-entry)*. This field is used only when modifying documents.

MOD: *(required).* Key in the transaction code (***PV***) and press [Tab]. Key in the same sec1 code as entered on the original document and then key in the batch ID number *(max. of 6 positions)*. You may name the batch ID number as desired. Press [Enter].

The Batch Ticket screen is displayed. Press [Enter]. The new header screen is displayed. The cursor positions on the first header field.

5 **Sec2** *(no-entry).* The system generates the security code that is inferred from your user ID to verify your authority to create this document. This field is not displayed.

Header Fields

6 **PV Date** *(optional default, numeric field; 6 positions).* Key in the date (*mmddyy*) of the document, usually the current date. The PV Date cannot be a future date. If left blank, the system defaults to the date the PV is accepted. It is not displayed.

7 **Acctg Pd** *(optional default, numeric field; 4 positions).* Key in the open accounting period date (*mmyy)*. If left blank, the system defaults to the accounting period inferred from the document date in the CLDT, but it is not displayed. Note: The Acctg Pd refers to the fiscal month and year, e.g., November 2000 is 02 01. You cannot enter a future accounting period.

8 **Budget FY** *(no-entry)*. Leave blank.

9 **Fund** *(no-entry)*. Leave blank.

10 **Action** *(alpha field, 1 position).*

ADD: *(no-entry)*. The system generates ***E*** in this field when the document is edited.

MOD: *(required)*. Key in ***M*** to modify a document.

11 **Trans Type** *(numeric field, 2 positions).*

ADD: *(optional).* Key in transaction type which is used to record an expenditure for the payment of goods or services such as contracts, lease agreements, equipment rentals, training, and expenditures against an agreement.

MOD: *(no-entry).* This field is inferred from the original document. Therefore, it cannot be modified.

12 **Prompt Pay Type** *(alpha field, 1 position)*.

ADD: *(optional default).* Key in one of the prompt pay type as follows associated with this voucher. If left blank, the prompt pay type is generated as identified for the vendor in the VEND.

C= Contract Payments

P = Perishable

D = Dairy

M = Meat

N = Pay Immediately

O = Other

MOD: *(no-entry*). This field cannot be modified.

13 **PV Type** *(optional default, numeric field; 1 position).* Key in the PV type. If left blank, the system defaults to ***1*** (regular pay).

14 **Sched Pymt Date** *(optional default, numeric field; 6 positions).* Key in the date (*mmddyy*) that you want this payment to be selected by the automated disbursements process. If left blank, the system calculates the schedule payment date.

15 **Descr** *(optional, alphanumeric field; max. of 12 positions).* Key in notes about this voucher.

16 **D.O.** *(optional default, alphanumeric field; 4 positions).* Key in the Treasury Disbursing Office that pays this voucher. If left blank, the system defaults to the Treasury Disbursing Office defined in the DOPT.

17 **FA Ind** *(optional, alpha field; 1 position*). Key in ***Y*** if this payment authorization pertains to a fixed assets acquisition.

18 **Ref Doc #** *(no-entry).* This field is entered on the line screen.

19 **Accp/Del Date** *(numeric field, 6 positions)*.

ADD: *(required).* Key in the date (*mmddyy*) the goods or services authorized for payment were accepted/delivered.

MOD: *(conditional).* If the date was incorrect on the original voucher, key in the date (*mmddyy*) the goods or services authorized for payment were accepted/delivered.

20 **Vendor Inv #** *(optional, numeric field; max. of 11 positions).* Key in the vendor invoice transaction code and document number for the goods or services related to this document.

21 **Inv Date** *(numeric field, 6 positions)*.

ADD: *(required).* Key in the invoice date (*mmddyy*) from the vendor's invoice for the goods or services related to this document.

MOD: *(conditional).* If the date was incorrect on the original voucher, key in the invoice date (*mmddyy*) from the vendor's invoice for the goods or services related to this document.

Header Fields *(cont'd)*

22 **Log Date** *(required, numeric field; 6 positions*). Key in the log date for the goods or services related to this document.

23 **FY** *(optional, numeric field; 2 positions).* Key in the fiscal year if this voucher is supporting a manual schedule that was entered into the system prior to the entry of this document.

24 **Schedule Cat** *(no-entry).* The system defaults to ***T*** (automated tape schedule).

25 **Schedule Typ** *(optional default, alpha field; 1 position).* Key in one of the following:

T = Transportation Treasury Schedule

M = Miscellaneous Schedule Treasury

If left blank, the system defaults to ***M***.

26 **Schedule Number** *(no-entry).* This field is not used by RD.

27 **Payment Cat** *(optional default, alpha field; 1 position).* Key in the code that identifies if the payment is a vendor payment or miscellaneous payment from the list below. When this field is left blank, the payment document processors will default to the field value from the VEND.

V = Vendor

M = Miscellaneous

28 **Offset Eligibility** *(required, alpha field; 1 position).* Key in one of the following to identifies if a vendor is eligible or ineligible to have their payments offset for outstanding debt.

Y = Yes

N = No

29 **Vendor Code** *(required, alphanumeric field; max. of 11 positions).* Key in the vendor code. It must be the same as the vendor code on the referenced document.

30 **Document Total** *(required, numeric field; max. of 15 positions).*

ADD: Key in this payment, including contract holdback lines. The amount should be entered in dollars and cents (e.g., ***13.75***).

MOD: Key in the total of all lines in this document, including contract holdback lines. (For example, if the current payment is ***50.00***, but it should be ***60.75***, key in ***10.75***.)

31 **Name** *(no-entry).* The system defaults to the name for the specified vendor as referenced on the line screen.

32 **Agreement #** *(numeric field, max. of 15 positions)*.

ADD: *(conditional).* If the accounting event (transaction type) is for a reimbursable agreement and the document is a refund of a collection against a billable agreement, key in the billable agreement number. Otherwise, optional.

MOD: *(no-entry*). This field cannot be modified.

33 **Address 1, 2, 3** *(no-entry).* The system defaults to the address for the specified vendor as referenced on the line screen.

34 **Holdback Tot** *(conditional, numeric field; max. of 15 positions).* If contract holdback lines are entered in this document, key in the net of all contract holdback lines in this document.

35 **Pmt Sequence #** *(conditional, numeric field; max. of 8 positions).* If a schedule number is entered or this voucher was submitted to Treasury in a manual SF-1166, key in the number representing the relative position of this voucher to other vouchers in that schedule. Otherwise, leave blank.

36 **Int Reason** *(alpha field, 1 position)*.

ADD: *(optional default).* Key in the code indicating the reason interest was applied to this payment. If left blank, the system defaults to ***1*** in the DOPT. See the IRCT for valid interest reason codes.

MOD: *(no-entry*). This field cannot be modified.

37 **Check Type** *(optional, alpha field; 1 position*). Key in one of the following

H = This payment is to be a hand pick-up. You may only enter ***H*** in this field if the Vendor Type Category for the Vendor entered in this document is not ***N*** (outside vendor).

C= This payment is to contain a comment card. Used only by Treasury-disbursing agencies.

S = This payment is to be held before mailing for additional stuffing. Used only by agencies that print their own checks.

B= This payment is to be both stuffed and picked up. Used only by agencies that print their own checks.

38 **Agency Head Approval** *(conditional, alpha field; 1 position).* If the document is subject to prompt payment and is scheduled eight or more days prior to the prompt payment schedule date, key in one of the following:

Y = Approved by the agency head

N = Not approved by the agency head

Otherwise, leave blank.

Header Fields *(cont'd)*

[39] **Disc Lost Reason** *(optional, alphanumeric field; 1 position).* Key in the discount lost reason code if the discount associated with this voucher have been lost.

[40] **Discount %** *(optional, numeric field; max. of 6 positions).* Key in the percentage of discount in whole percents with 3 decimal places.

[41] **Amount** *(optional, numeric field; max. of 8 positions).* Key in the amount of discount for this document. This amount is used to compute the discount percentage and that percentage will apply to all lines.

[42] **Days** *(conditional, numeric field; 2 positions).* If either a discount percent or a discount amount is entered, key in the number of days the discount is applicable.

[43] **Comments to Print** *(optional default, alphanumeric field; max. of 40 positions).* Key in the text to be printed on the face of the checks if issued by Treasury. If your agency prints its own checks, the comments will be printed on the check stub. If a comment card is to be used with this check, enter payment text in the VTXT. If left blank, the system checks the DPTX to see if any default text is specified. If so, the system uses the default text, along with the payment voucher number as the default text.

After completing the header fields, press [Enter]. Complete the line fields (**Figure 4:12**) as described below.

Line Fields

[44] **Line #** *(required, numeric field; 3 positions).*

ADD: Key in the number for each accounting line from ***001*** to ***999***. (A single accounting line may be used to provide funding for multiple commodity lines.)

MOD: Key in the number of the accounting line to be modified or key in a new line to be added.

[45] **Trans Type** *(optional default, alphanumeric field; 2 positions).* Key in the transaction type that defines the appropriate accounting model for this document. If left blank, the system defaults to the transaction type entered in the document header.

[46] **Line Type** *(conditional, alpha field; 1 position).* If the line amount refers to a contract holdback amount, or manually computed Prompt Payment interest amount, or manually computed Prompt Payment penalty amount associated with Prompt Payment Interest, key in one of the following:

- ***H*** = Contract holdback line
- ***I*** = Manually coded interest line
- ***P*** = Manually coded penalty line
- ***N*** = Normal payment line

Otherwise, leave blank. If left blank, the system defaults to ***N***.

[47] **Ref Doc #** *(required, alphanumeric field; 13 positions).* Key in the transaction code (e.g., ***RQ, MO***) and the document number of the reference requisition, receiver, or order document.

[48] **Ref Line** *(optional, numeric field; 3 positions).* Key in the accounting line number of the reference item (e.g., ***001***).

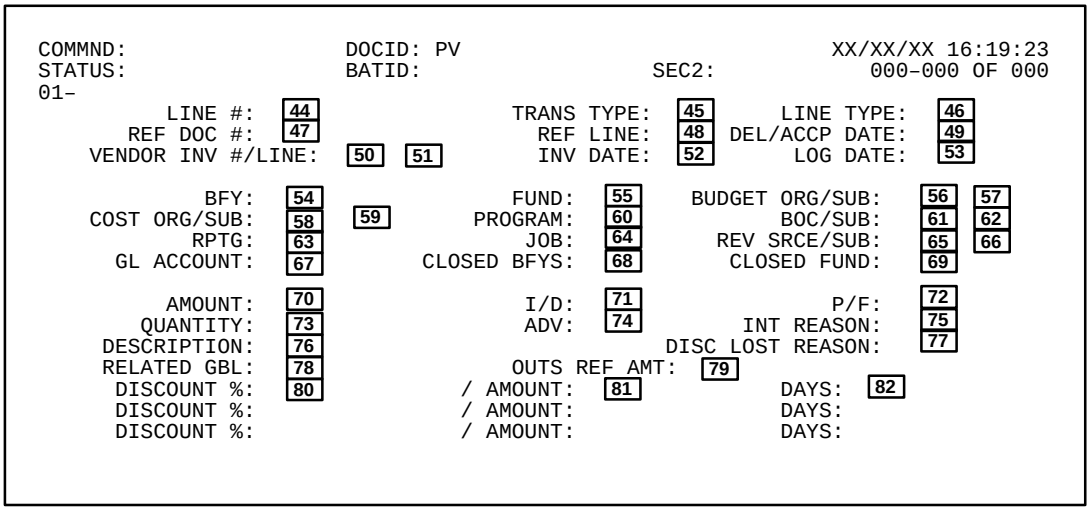

Figure 4:12. Payment Voucher Document (PV) line fields

Line Fields *(cont'd)*

[49] **Del/Accp Date** *(conditional, numeric field; 6 positions).* If the Trigger Date field referenced by the Prompt Pay Type is ***D***, or a receiver is not referenced, or the Accp/Del Date is not entered in the header, key in the date (*mmddyy*) in which the goods authorized for payment were accepted/delivered. Otherwise, leave blank.

[50] **Vendor Inv #** *(optional default, numeric field; max. of 11 positions).* Key in the vendor invoice document number for the goods and services related to this document. If left blank, the system defaults to the value entered in the Vendor Invoice Number field in the document header if the Vend Inv. Line is entered.

[51] **Vendor Inv Line** *(optional, numeric field; 3 positions).* Key in the line number of the line in a vendor invoice you wish to reference.

[52] **Inv Date** *(numeric field, 6 positions).*

ADD: (*optional*). Key in the invoice date (*mmddyy*) from the vendor's invoice for the goods or services related to this document.

MOD: (*conditional*). If the date was incorrect on the original voucher, key in the invoice date (*mmddyy*) from the vendor's invoice for the goods or services related to this document.

[53] **Log Date** *(conditional, numeric field; 6 positions).* If the Trigger Date field for the Prompt Pay Type is ***I*** and the Log Date (**Field 22**) is not entered in the document header, key in the log date (*mmddyy*) for the goods or services related to this document. Otherwise, leave blank.

[54] **BFY** *(no-entry*). Leave blank. The budget fiscal year is derived from the DVAL.

[55] **Fund** *(no-entry*). Leave blank. The fund code is derived from the DVAL.

[56] **Budget Org** *(no-entry*). Leave blank. The budget organization is derived from the DVAL.

[57] **Budget Sub** *(no-entry)*. This field is not used by RD.

[58] **Cost Org** *(no-entry*).This field is not used by RD.

[59] **Cost Sub** *(no-entry).*This field is not used by RD.

[60] **Program** *(no-entry*). This field displays the 9-position ACCS code. It is derived from the Accounting Structure Code Cross-Reference Table (ACXT).

[61] **BOC** *(no-entry*). This code is inferred from the reference document.

[62] **Sub** *(no-entry*). This field is not used by RD.

[63] **Rptg** *(no-entry*). Leave blank. The reporting category code is derived from the DVAL and contains the 2-position special purpose code.

[64] **Job** *(no-entry*). This field is not used by RD.

[65] **Rev Srce** (*no-entry).* This field is not used by RD.

[66] **Sub** *(no-entry)* .This field is not used by RD.

[67] **GL Account** *(no-entry).* This field is not used by RD.

[68] **Closed BFYs** *(no-entry).* Leave blank.

[69] **Closed Fund** *(no-entry).* Leave blank.

[70] **Amount** *(required, numeric field; max. of 15 positions).*

ADD: Key in the dollar amount of the payment for this line. The amount should be entered in dollars and cents (e.g., ***13.75***).

MOD:MOD: Key in the amount of change from the previous amount. If the amount of the payment (excluding interest automatically computed by the system) has not changed, key in ***0.00***.

[71] **I/D** *(optional default, alpha field; 1 position).*

ADD: Key in ***D*** to record credit memos on original entries. Otherwise, this field is used for modifications only.

MOD: If this is a modification to a previously accepted document, key in one of the following:

I = Increase the amount

D = Decrease the amount

Otherwise, optional. If left blank, the system defaults to ***I***. Note: If the document total on the header screen is 0.00, leave blank.

[72] **P/F** *(conditional, alpha field; 1 position).* If referencing another document, key in one of the following:

P = Partial payment

F = Final payment

If the line amount is equal to the outstanding line amount of the reference document, the system defaults to ***F***.

[73] **Quantity** *(optional, numeric field; max. of 9 positions).* Key in the quantity of goods.

[74] **Adv** *(optional, alpha field; 1 position).* Key in one of the following:

A = Advance refund

N = Customer collection refund

Line Fields *(cont'd)*

75 **Int Reason** *(conditional, alpha field; 1 position).* If the Int Reason (**Field 36**) is left blank in the header, key in the reason code which explains why interest was applied to this line. This code is required if Line Type is ***I*** or ***P.*** See the IRCT for valid interest reason codes. Otherwise, leave blank.

76 **Description** *(optional, alphanumeric field; max. of 30 positions).* Key in any notes about this line.

77 **Disc Lost Reason** *(alpha field, 1 position).*

ADD: *(conditional).* If there are discount terms either entered in this voucher or inferred from the Obligation and/or the Vendor Invoice documents and the discount is considered lost, key in the reason code which explains why the discount appropriate for this line was lost. If left blank, the system defaults to the discount lost reason code entered in the document header or from the DOPT.

MOD: *(no-entry*). This field cannot be modified.

78 **Related GBL** *(optional, alphanumeric field; max. of 11 positions).* Key in the document ID of the obligation document that was used to obligate freight charges, if any, related to this document.

79 **Outs Ref Amt** *(no-entry).* When a document is quick-edited, the outstanding reference document amount is system generated.

80 **Discount %** *(numeric field, max. of 6 positions).*

ADD: *(conditional).* If a discount amount is entered, the discount % is not allowed. Otherwise, key in the percentage of discount in whole percents with 3 decimal places.

MOD: *(no-entry*). This field cannot be modified.

81 **Amount** *(numeric field, max. of 8 positions).*

ADD: *(conditional).* If a discount % is entered, the discount amount is not allowed. Key in the amount of discount for this document.

MOD: *(no-entry*). This field cannot be modified.

82 **Days** *(numeric field, 2 positions).*

ADD: *(conditional).* If either a discount percent or a discount amount is entered, key in the number of days the discount is applicable.

After Completing The Fields

Follow the steps below to edit and process the data:

1. At the Command field, key in ***E*** (edit, for the Add action) or ***EB*** (edit batch, for the Modify action).

2. Press [Enter] to edit the data. If errors are detected, error messages are displayed at the bottom of the screen. All fatal errors must be corrected before the database is updated. For more information about error messages and correcting errors, see **Part 2, System Edits**.

3. After the data passes system edits, process the document as described:

- For the **Add** action, key in ***R*** (run) at the Command field. Press [Enter]. The document status is displayed.

OR

- For the **Modify** action, the Batch Ticket screen is displayed. The message *No Error Detected* is displayed at the bottom of the screen. Key in ***RB*** (run batch) in the Command field. Press [Enter]. The message *All Documents Accepted* is displayed at the bottom of the Batch Ticket screen.

Performing Other Actions. For general instructions on canceling and deleting documents, see **Part 2, Using Documents**.

Standard Voucher Clone Document (CM)

In order to commit funds for non-procurement feeder systems such as Telephone Vendors System (TELE), Utility Vendors System (UTVN), Federal Telephone System Payments (FTSP), etc., RD will use the CM to record commitments on an annual basis. Although this document will update the General Ledger and Budget Tables the same as an RQ, it will not update the Requisition Inquiry tables (REQH and REQL).

The commitment process requires that the amount shown on the CM be reduced on a monthly basis. In order to simplify this [process, the Recurring Journal Voucher and Standard Voucher Data Entry Table (REJV) will be utilized. Once populated, this table will automatically create CMs that will reduce the amount of the original commitment by the estimated monthly amount.

Refer to **Part 8, FFIS Tables**, for instructions on completing the REJV. Refer to **Part 9, Appendix I, Rural Development FFIS Processing Matrix for Spending**.

The CM is used to record accounting information related to a commitment and descriptive information about the commitment such as delivery location, delivery date, and requestor's name.

Additionally, the CM can be used to record accounting transactions that occur regularly (e.g., expensing a prepaid item, recording monthly accruals), expense previously recorded expenditures, modify closed documents, and post payroll expenditures generated by non-procurement related feeder systems.

After the CM is processed, you can view the results in the following tables:

- Journal Voucher and Standard Journal Inquiry Table (JVLT)
- Recurring Journal Voucher and Standard Voucher Entry Table (REJV)
- Budget Execution tables (ALOC, ALLT, SASP).
- Document Cross Reference Inquiry Table (DXRF)

To access the CM, at the FFS screen, key in ***L*** at the Action field and ***CM*** at the TableID field. Use the [Space Bar] to erase the remaining 2 characters. Press [Enter]. The CM (**Figure 4:13**) is displayed.

Detailed instructions for adding and modifying CMs are described below.

Adding/Modifying A Document. The CM is used for entering data from estimates prepared by the organization and from the following forms:

- AD–474, Transmittal – Telephone and Utilities
- AD–643, Transmittal GSA Motor Pool
- AD–644, Transportation Services Distribution – GSA Motor Pool
- AD–955, GSA Telephone Transmittal

At the CM screen, complete the fields as follows:

Command Fields

[1] **Commnd** *(alpha field, 3 positions)*

ADD: *(no-entry)*. ***New*** is system generated. Press [Tab].

MOD:(*conditional*). If the document currently resides in the Document Suspense File, key in ***Get*** and press [Tab]. If the document has been archived (no longer in the Document Suspense File), see **Recreating An Archived Document** under **Processing In Document** in **Part 2.**

```
COMMND: NEW [1]          DOCID: CM [2]                          XX/XX/XX 13:45:00
STATUS: [3]              BATID: [4]              SEC2: [5]
H-
                              STANDARD VOUCHER DOCUMENT

              CM DATE: [6]                              ACCOUNTING PERIOD: [7]
               ACTION: [8]   EXPENSE(E), REVENUE(R), GL(G), BUDGET(B): [9]
         BUDGET FYS: [10]                                          FUND: [11]
    REVERSAL PERIOD: [12]
            COMMENT: [13]                  BUDGET OVERRIDE IND: [14]
       REF TRANS ID: [15]

      DOCUMENT TOTAL: [16]

        DESCRIPTION: [17]
```

Figure 4:13. Standard Voucher Clone Document (CM) header fields

Command Fields *(cont'd)*

2 **DocID** *(required, alphanumeric field; max. of 15 positions).*

ADD: At the system-generated transaction code (***CM***), press [Tab]. Key in the sec1 code (i.e., the 2 position division code) and press [Tab]. Key in the Org. Code (5 positions). Press [#], then press [Enter]. Sequential numbers are generated in positions 10–15.

MOD: Key in the document identification of the original document. Press [Enter]. The selected document is displayed. Key in ***New*** at the Command field. Press [Tab] to move the cursor to the BatID field.

3 **Status** *(no-entry).* After the document is processed, this field displays the current status of a document.

4 **BatID** (*alphanumeric field, max. of 12 positions*).

ADD: (*no-entry*). This field is used only when modifying documents.

MOD: (*required)***.** Key in the transaction code (***CM***) and press [Tab]. Key in the same sec1 code as entered on the original document and then key in the batch ID number (*max. of 6 positions*). You may name the batch ID number as desired. Press [Enter].

The Batch Ticket screen is displayed. Press [Enter]. The new header screen is displayed. The cursor positions on the first header field.

5 **Sec2** *(no-entry).* The system generates the security code that is inferred from your user ID to verify your authority to create this document. This data is not displayed.

Header Fields

6 **CM Date** *(optional default, numeric field; 6 positions)*. Key in the date (*mmddyy*) of the document. If left blank, the system defaults to the date the document is accepted by the system.

7 **Accounting Period** *(optional default, numeric field; 4 positions)*. Key in the open accounting period date (*mmyy)*. If left blank, the system defaults to the accounting period inferred from the document date in the CLDT, but it is not displayed.

8 **Action** *(alpha field, 1 position).*

ADD: (*optional default*). Key in ***E*** to enter a new document.

MOD: (*required*). Key in ***M*** to modify a previously accepted document.

9 **Expense (E), Revenue (R), GL (G), Budget (B)** *(required, alpha field, 1 position).* Key in ***E,*** Expense Adjustment.

10 **Budget FYs** *(no-entry)*. Leave blank.

11 **Fund** *(no-entry)*. Leave blank.

12 **Reversal Period** *(no-entry)*. Leave blank. This field is not used for the CM.

13 **Comments** *(optional, alphanumeric field; max. of 12 position*s). Key in notes about this document.

14 **Budget Override Ind** *(no-entry)*. Leave blank. The system defaults to ***N.***

15 **Ref Trans ID** *(no-entry)*. Leave blank.

16 **Document Total** *(required, numeric field; max. of 15 positions)*. Key in the unsigned amount of all lines in the document. Compute the difference between the total increased amounts and the total decreased amounts.

17 **Description** *(optional, alphanumeric field; max. of 30 positions).* Key in the description to be used as the default line description for all lines in this document where no line descriptions entered.

After completing the header fields, press [Enter]. Complete the line fields (**Figure 4:14**) as described below.

Line Fields

18 **Line Number** *(required, numeric field; 3 positions).* Key in a different number for each line (i.e., ***001*** to ***999*)**.

19 **Trans Type** *(required, alpha field; 2 positions).* Key in ***RD***.

20 **Exp/Rev/Gl/Bud** *(no-entry*). Leave blank.

21 **Budget FYs** (*no-entry*). Leave blank. The budget fiscal year is derived from the DVAL.

22 **Fund** *(no-entry).* Leave blank. The fund code is derived from the DVAL.

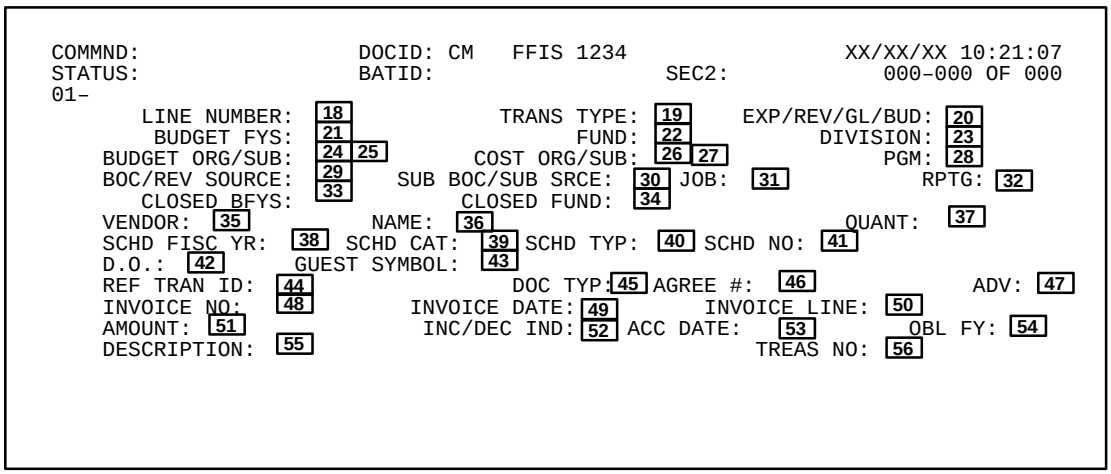

Figure 4:14. Standard Voucher Clone Document (CM) line fields

Line Fields *(cont'd)*

23 **Division** *(no-entry)*. Leave blank. The division code is derived from the DVAL.

24 **Budget Org** *(no-entry*). Leave blank. The budget organization is derived from the DVAL.

25 **Budget Sub** *(no-entry).* This field is not used by RD.

26 **Cost Org** *(no-entry)*. This field is not used by RD.

27 **Cost Sub** *(no-entry)*. This field is not used by RD.

28 **Pgm** *(required, alphanumeric field; 9 positions)*. Key in the 9-position ACCS code. See the Program Reference Table (PGMT) for code verification.

29 **BOC/Rev Source** *(required, numeric field, 4 positions)*. Key in the budget object code appropriate for this document. See the BOCT for valid codes.

30 **Sub BOC/Sub Srce** *(no-entry)*. This field is not used by RD.

31 **Job** *(no-entry).* This field is not used by RD.

32 **Rptg** *(no-entry)*. Leave blank. The reporting category is derived from the DVAL and contains the 2-digit special purpose code.

33 **Closed BFYs** *(no-entry).* Leave blank.

34 **Closed Fund** *(no-entry).* Leave blank.

35 **Vendor** *(optional, numeric field; max. of 11 positions).* Key in the code of the vendor appropriate for this document. See the VEND for valid vendor codes.

36 **Name** *(conditional, alphanumeric field; max. of 30 positions).* If a vendor code is not specified, key in the vendor's name. Otherwise, optional.

37 **Quant** *(no-entry).* This field is not used by RD.

38 **Schd Fisc Yr** *(no-entry).* This field is not used by RD.

39 **Schd Cat** *(no-entry).* This field is not used by RD.

40 **Schd Typ** *(no-entry).* This field is not used by RD.

41 **Schd No** *(no-entry).* This field is not used by RD.

42 **D. O.** *(no-entry).* This field is not used for the CM.

43 **Guest Symbol** *(no-entry).* This field is not used for the CM.

44 **Ref Tran ID** *(no-entry).* This field is not used for the CM.

45 **Doc Typ** *(no-entry).* This field is not used for the CM.

46 **Agree #** *(no-entry).* This field is not used for the CM.

47 **Adv** *(no-entry).* This field is not used for the CM.

48 **Invoice No** *(no-entry).* This field is not used for the CM.

49 **Invoice Date** *(no-entry).* This field is not used for the CM.

50 **Invoice Line** *(no-entry).* This field is not used for the CM.

51 **Amount** *(required, numeric field; max. of 15 positions).* Key in the dollar amount of the item described in this line. If this is a modification of a previous line, key in the amount of the change. The Inc/Dec field indicates whether this is to be added or subtracted from the original amount.

Line Fields *(cont'd)*

52 **Inc/Dec Ind** *(conditional, alpha field; 1 position).* If making an adjustment, key in one of the following indicators:

I = Amount is an increase
D = Amount is a decrease

If left blank, the system defaults to ***I***.

53 **Acc Date** *(no-entry).* This field is not used for the CM.

54 **Obl FY** *(no-entry).* This field is not used for the CM.

55 **Description** *(optional, alphanumeric field; max. of 30 positions).* Key in a description.

56 **Treas No** *(no-entry).* This field is not used for the CM.

After Completing The Fields

Follow the steps below to edit and process the data.

1. At the Command field, key in ***E*** (edit, for the Add action) or ***EB*** (edit batch, for the Modify action).

2. Press [Enter] to edit the data. If errors are detected, error messages are displayed at the bottom of the screen. All fatal errors must be corrected before the database is updated. For more information about error messages and correcting errors, see **Part 2, System Edits**.

3. After the data passes system edits, process the document as described:

- For the **Add** action, key in ***R*** (run) at the Command field. Press [Enter]. The document status is displayed.

OR

- For the **Modify** action, the Batch Ticket screen is displayed. The message *No Error Detected* is displayed at the bottom of the screen. Key in ***RB*** (run batch) in the Command field. Press [Enter]. The message *All Documents Accepted* is displayed at the bottom of the Batch Ticket screen.

Performing Other Actions. For general instructions on canceling and deleting documents, see **Part 2, Using Documents**.

Training Order Document (TG)

The TG is used to record obligations prior to the services being rendered or the receipt of the goods and to record training-specific elements such as start and completion dates, course codes, and training codes. All TGs will reject in FFIS and require the referencing of an RQ document and the line number(s).

After the TG is processed, you can view the results in the following tables:

- Training Order Header Inquiry Table (TROH)
- Orders Header Inquiry and Purchase Order Accounting Lines Inquiry Tables (OBLH, OBLL)
- Requisition Header and Line Inquiry Tables (REQH, REQL)
- Budget Execution tables (ALOC, ALLT, SASP)
- General Ledger Balance Inquiry Table (GLBL)
- Document Cross Reference Inquiry Table (DXRF)

To access the TG, at the FFS screen, key in ***L*** at the Action field and TG at the Table ID field. Use the [Space Bar] to erase the remaining 2 characters. Press [Enter]. The TG (**Figure 4:15**) is displayed.

Detailed instructions for adding and modifying TGs are described below.

Adding/Modifying A Document. The TG is used for entering data from the form SF–182, Request, Authorization, Agreement and Certification of Training.

At the TG screen, complete the fields as follows:

Command Fields

1 **Commnd** *(conditional, alpha field; 3 positions).*

ADD: *(no-entry)*. New is system generated. Press [Tab].

MOD: *(conditional)*. If the document currently resides in the Document Suspense File, key in ***Get*** and press [Tab]. If the document has been archived (no longer in the Document Suspense File), see **Recreating An Archived Document** under **Processing in Documents** in **Part 2**.

2 **DocID** *(required, alphanumeric field; max. of 15 positions).*

ADD: At the system-generated transaction code (TG), press [Tab]. Key in the sec1 code (i.e., the 2-position division code) and press [Tab]. Key in the Org. Code (5 positions). Press [#], then press [Enter]. Sequential numbers are generated in positions 10–15.

MOD: Key in the document identification of the original document. Press [Enter]. The selected document is displayed. Key in New at the Command field. Press [Tab] to move the cursor to the BatID field.

3 **Status** *(no-entry)*. After the document is processed, this field displays the current status of a batch or a document.

4 **BatID** *(conditional, alphanumeric field; 12 positions).*

ADD: *(no-entry)*. This field is used only when modifying documents.

MOD: *(required)*. Key in the transaction code (***TG***) and press [Tab]. Key in the same sec1 code (i.e., the 2 position division code) as entered on the original document and then key in the batch ID number *(max. of 6 positions)*. Press [Enter].

The new header screen is displayed. The cursor positions on the first header field.

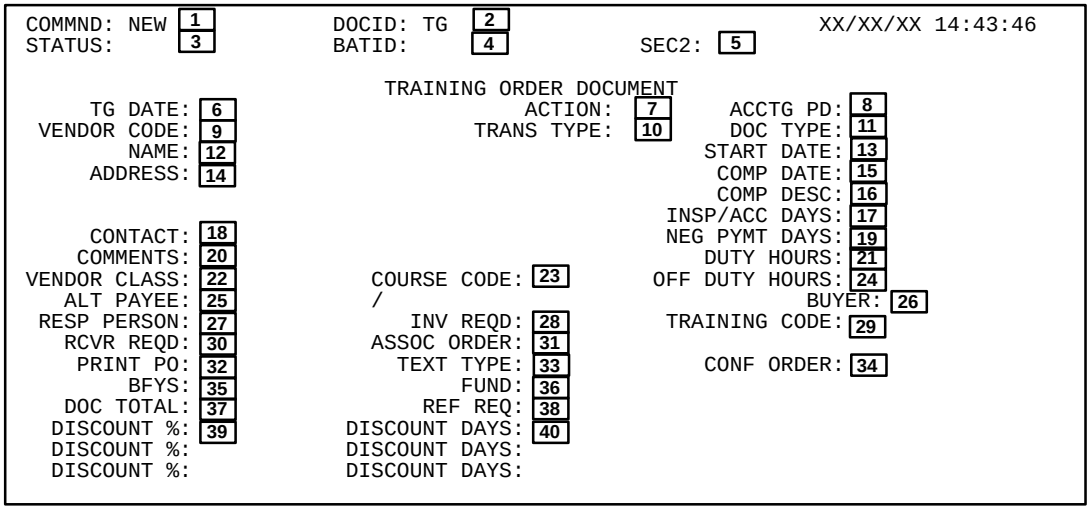

Figure 4:15. Training Order Document (TG) header fields

Command Fields*(cont'd)*

[5] **Sec2** *(no-entry)*. The system generates the security code that is inferred from your user ID to verify your authority to create the document. This data is not displayed.

Header Fields

[6] **TG Date** *(optional default, numeric field; 6 positions)*. Key in the date (*mmddyy*) of the document, usually the current date. It cannot be a future date. If left blank, the system defaults to the date the document is accepted.

[7] **Action** *(optional default, alpha field; 1 position)*.

ADD: *(no-entry)*. The system generates an E in this field, to add a new document, when this field is left blank.

MOD: *(required)*. Key in an ***M*** to modify a previously accepted document. Key in an ***X*** to cancel an existing document.

[8] **Acctg Pd** *(conditional, numeric field; 4 positions)*. If the Acctg Period Reqd field is ***Y*** in the TCAT, key in the open accounting period date (*mmyy*). If left blank, the system defaults to the accounting period inferred from the document date in the CLDT. Note: The Acctg Pd refers to the fiscal month and year, e.g., November 2000 is 02 01. You can enter a future accounting period.

[9] **Vendor Code** *(conditional, alphanumeric field; max. of 11 positions)*. If the Vendor Reqd On Spend Doc field in the SOPT is ***Y***, key in the vendor code. Otherwise, leave blank. See the VEND for valid vendor codes.

[10] **Trans Type** *(required, numeric field; 2 positions)*. Key in the transaction type that defines the accounting posting model for the document. See ACED for valid transaction types.

[11] **Doc Type** *(optional, alphanumeric field; 1 position)*. Key in a document type, other than ***B***, used to define various types of purchases.

[12] **Name** *(no-entry)*. The name is inferred from the VEND.

[13] **Start Date** *(optional, numeric field; 6 positions)*. Key in the start date (*mmddyy*) of the service/contract.

[14] **Address** *(no-entry)*. The address is inferred from the VEND.

[15] **Comp Date** *(optional, numeric field; 6 positions)*. Key in the completion date (*mmddyy*) of the service/contract.

[16] **Comp Desc** *(conditional, alphanumeric field; max. of 12 positions)*. If there is no specific calendar end date, e.g., ***when done***, key in a description of the completion date.

[17] **Insp/Acc Days** *(optional default, numeric field; max. of 2 positions)*. Key in the number of days between delivery and acceptance that were negotiated as acceptable for the order. If left blank, the system defaults to ***0***.

[18] **Contact** *(optional default, alphanumeric field; max. of 30 positions)*. Key in the name of the vendor's representative. If left blank, the system defaults to the vendor contact in the VEND.

[19] **Neg Pymt Days** *(optional default, numeric field; max. of 2 positions)*. Key in the payment terms negotiated for payment of the order after receipt of the invoice. If left blank, the system defaults to ***0***.

[20] **Comments** *(optional, alphanumeric field; max. of 12 positions)*. Key in any notes about the order.

[21] **Duty Hours** *(optional, numeric field; max. of 4 positions)*. Key in the duty hours associated with the training.

[22] **Vendor Class** *(optional, alphanumeric field; max of 5 positions)*. Key in the vendor classification code.

[23] **Course Code** *(optional, alphanumeric field; max. of 8 positions)*. Key in the course code or catalog number.

[24] **Off Duty Hours** *(optional, numeric field; max. of 4 positions)*. Key in the non-duty hours associated with the training.

[25] **Alt Payee** *(optional, alphanumeric field; max. of 11 positions)*. Key in the vendor code used as an alternate payee. See the VEND for valid codes.

[26] **Buyer** *(optional, alphanumeric field; 2 positions)*. Key in the buyer code processing the order. See the BUYT for valid codes.

[27] **Resp Person** *(optional, alphanumeric field; max. of 15 positions)*. Key in the name of the person who may be contacted regarding the order.

[28] **Inv Reqd** *(optional default, alpha field; 1 position)*. Key in one of the following:

- ***Y*** = Indicates that payments against the order cannot exceed the dollar value of goods received and accepted (within tolerances)
- ***N*** = Disables the edit

If left blank, the system defaults to the value of the Invoice Required field in the SOPT.

Header Fields *(cont'd)*

29 **Training Code** *(optional, alphanumeric field; max. of 8 positions)*. Key in the code associated with the training.

30 **Recv Reqd** (*optional default, alpha field; 1 position*). Key in one of the following:

Y = Indicates that payments against the order cannot exceed the dollar value of goods received and accepted (within tolerances)
N = Disables the edit

If left blank, the system defaults to the value of the Receiver Required field in the SOPT.

31 **Assoc Order** *(optional, alphanumeric field; max. of 13 positions)*. Key in the transaction code and document number of an associated order.

32 **Print PO** (*optional default,alpha field; 1 position*). Key in one of the following:

Y = Prints the order
N = Does not print the order

If left blank, the system defaults to the value in the Print field in the TCAT.

33 **Text Type** *(optional, alphanumeric field; 2 positions)*. Key in the code associated with the standard text to be printed on the order. See the TXTP for valid codes.

34 **Conf Order** *(optional default, alpha field; 1 position)*. To confirm an order, key in ***Y*** (yes). If left blank, the system defaults to ***N*** (no).

35 **BFYs** *(no-entry)*. Leave blank.

36 **Fund** *(no-entry)*. Leave blank.

37 **Doc Total** *(required, numeric field; max. of 15 positions)*. Key in the unsigned net amount of all accounting lines for the order.

38 **Ref Req** *(optional, alphanumeric field; max. of 13 positions)*. Key in the transaction code and document number of the referenced requisition, If left blank, the reference code and number must be entered on every applicable line of the order.

39 **Discount %** *(optional, numeric field; max. of 6 positions)*. Key in the percentage of discount (whole numbers or three decimal places) associated with the order. The discount applies to all lines.

40 **Discount Days** *(conditional, numeric field; max. of 2 positions)*. If Discount % (**Field 39**) was entered, key in the number of days the discount is applicable. Otherwise, leave blank.

After completing the header fields, press [Enter]. Complete the line fields (**Figure 4:16**) as described below.

Line Fields

41 **Line** (*required, numeric field; 3 positions*). Key in a number from ***001*** to ***999*** for the accounting line.

42 **Ref Req–Line** *(conditional, alphanumeric field; max. of 13 positions)*. Key in the transaction code, document number, and reference line number of the referenced requisition..

43 **Budget FYs** *(no-entry)*. Leave blank. The budget fiscal year is derived from the DVAL.

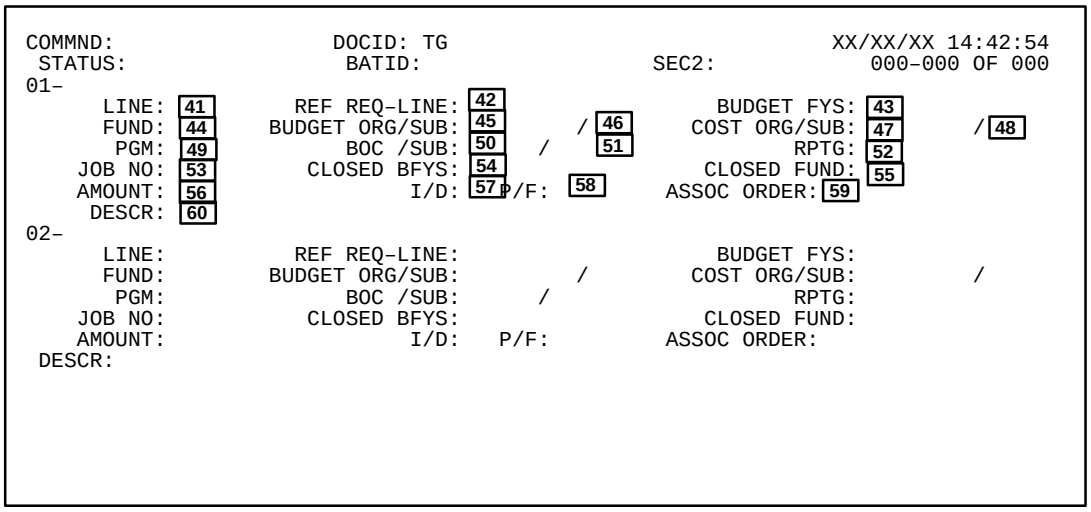

Figure 4:16. Training Order Document (TG) line fields

Line Fields *(cont'd)*

[44] **Fund** *(no-entry)*. Leave blank. The fund is derived from the DVAL.

[45] **Budget Org** *(no-entry)*. This field is not used by RD.

[46] **Budget Sub** *(no-entry)*. This field is not used by RD.

[47] **Cost Org** *(no-entry)*. This field is not used by RD.

[48] **Cost Sub** *(no-entry)*. This field is not used by RD.

[49] **Pgm** *(required, alphanumeric field; 9 positions).*

ADD: Key in the 9-position ACCS code, which resides in the program field. See the PGMT for ACCS code verification.

MOD: If adding a new line, key in the 9-position ACCS code. The existing field can only be modified if an order has not been placed against the line.

[50] **BOC** *(no-entry)*. Leave blank. The BOC is inferred from the referenced document.

[51] **Sub BOC** *(no-entry)*.This field is not used by RD.

[52] **Rptg** *(no-entry)*. Leave blank. The reporting category shows the 2-position special purpose code and is derived from the DVAL.

[53] **Job No** *(no-entry)*. This field is not used by RD.

[54] **Closed BFYs** *(no-entry)*. Leave blank.

[55] **Closed Fund** *(no-entry)*. Leave blank.

[56] **Amount** *(required, numeric field; max. of 15 positions)*. Key in the amount for the accounting distribution.

[57] **I/D** *(optional default, alpha field; 1 position)*. Key in one of the following:

I	=	Indicates the amount entered is an increase
D	=	Indicates the amount entered is a decrease

If left blank, the system defaults to ***I***.

[58] **P/F** *(conditional, alpha field; 1 position)*. If the Partial/Final Indicator Required flag in the TCAT is ***Y***, and a reference document is entered, key in one of the following:

P	=	Indicates a partial order
F	=	Indicates a final order

If left blank, the system defaults to ***P*** if this is a partial liquidation of the referenced document, or ***F*** if this is a full liquidation of the referenced document.

[59] **Assoc Order** *(no-entry)*. This field is not used by RD.

[60] **Descr** *(optional, alphanumeric field; max. of 31 positions)*. Key in a description of the line amount.

After Completing The Fields

Follow the steps below to edit and process the data:

1. At the Command field, key in ***E*** (edit, for the Add action) or ***EB*** (edit batch, for the Modify action).

2. Press [Enter] to edit the data. If errors are detected, error messages are displayed at the bottom of the screen. All fatal errors must be corrected before the database is updated. For more information about error messages and correcting errors, see **Part 2, System Edits**.

3. After the data passes system edits, process the document as described:

- For the **Add** action, key in ***R*** (run) at the Command field. Press [Enter]. The document status is displayed.

OR

- For the **Modify** action, the Batch Ticket screen is displayed. The message *No Error Detected* is displayed at the bottom of the screen. Key in ***RB*** (run batch) in the Command field. Press [Enter]. The message *All Documents Accepted* is displayed at the bottom of the Batch Ticket screen.

Performing Other Actions. For general instructions on canceling and deleting documents, see **Part 2, Using Documents**.

FEDSTRIP Miscellaneous Order Document (FO)

The FO is generated by the Federal Standard Requisitioning and Issue Procedure System (FEDS also known as FEDSTRIP) interface to FFIS. The FO is used to record FEDSTRIP obligations in FFIS. All FO documents will reject in FFIS and require the referencing of an RQ document and line number.

The FEDSTRIP interface generates the FO document for the form AD–633, Multi-use Standard Requisitioning/Issue Document. Each generated FO consists of a header record and up to 50 obligation lines made by a requisitioner to a single vendor in one day.

The FO is a clone of the baseline Miscellaneous Order Document (MO). **Figure 4:17** and **Figure 4:18** show the FO header and line screens.

After the FO is processed and accepted in FFIS, the transaction updates the following tables:

- Orders Header Inquiry and Purchase Order Accounting Line Inquiry Table (OBLH, OBLL)
- Requisition Header inquiry and Requisition Accounting Line Inquiry tables (REQH, REQL)
- Budget Execution tables (APPR, APOR, FAPP, FAPR, FALC, ALOC, ALLT, SASP)
- General Ledger Balance Inquiry Table (GLBL)
- Cross-Reference tables (DXRF, VXRF, GIDT)

To access the FO through the Document Suspense File, see **Part 2, Using The Document Suspense File**.

The fields that are populated on the FO through the interface process are listed as follows:

```
COMMND:                  DOCID: FO                                XX/XX/XX 14:36:52
STATUS:                   BATID:    [1]            SEC2:

                         MISCELLANEOUS ORDER DOCUMENT

     MO DATE:                              ACTION:        ACCTG PD:
 VENDOR CODE:  [2]                   TRANS TYPE:  [3]    DOC TYPE:  [4]
        NAME:  [5]                                [6]
     ADDRESS:  [7]                                  EFFECTIVE DATE:
                                                       END DATE:     [8]
                                                    NEG PYMT DAYS:
     CONTACT:                                       NO OF OPTIONS:
    COMMENTS:                                  RESP PERSON:
   ALT PAYEE:  [9]          /                                  BUYER:
   RCVR REQD:          INV REQD:            PURCH METHOD:      PRINT PO:
   TEXT TYPE:       CONF ORDER:             INVITATION #:
 ASSOC ORDER:                                 CONTRACT #:
BFYS:              FUND:                   DOCUMENT TOTAL:
                REF REQ:                   BLANKET NUMBER:
            DISCOUNT %:                              DAYS:  [10]
            DISCOUNT %:                              DAYS:
            DISCOUNT %:                              DAYS:
```

Figure 4:17. FEDSTRIP Miscellaneous Order Document (FO) header fields (Miscellaneous Order Document)

```
COMMND:                  DOCID: FO                                XX/XX/XX 14:37:25
STATUS:                  BATID:                   SEC2:              000-000 OF 000
01-
      LINE: [11]      REF REQ-LINE: [12]                  BUDGET FYS: [13]
      FUND: [14]    BUDGET ORG/SUB: [15]     /          COST ORG/SUB:          /
       PGM: [16]           BOC /SUB: [17]  /                     RPTG: [18]
    JOB NO:            CLOSED BFYS:                      CLOSED FUND:
    AMOUNT: [19]                I/D: [20] P/F: [21]    ASSOC ORDER:
     DESCR: [22]
02-
      LINE:           REF REQ-LINE:                       BUDGET FYS:
      FUND:         BUDGET ORG/SUB:          /          COST ORG/SUB:          /
       PGM:               BOC /SUB:      /                     RPTG:
    JOB NO:            CLOSED BFYS:                      CLOSED FUND:
    AMOUNT:                     I/D:   P/F:           ASSOC ORDER:
     DESCR:
```

Figure 4:18. FEDSTRIP Miscellaneous Order Document (FO) line fields (Miscellaneous Order Document)

Command Fields

[1] **DocID** *(alphanumeric field, max. of 15 positions).* Displays the transaction code (***FO***), the sec1 code (i.e., the 2 position division code) and the document number (*max. of 11 positions)*. **Positions 1–6** represent the register schedule number and **positions 7–9** represent a sequential number derived from the Automated Document Numbering Table (ADNT).

Header Fields

[2] **MO Date** (*numeric field, 6 positions).* Displays the requisition date (*mmddyy*). This field is system generated with data inferred from the date parameter file, if specified, or from the requisition date.

[3] **Action** *(alpha field, 1 position).* The system generates ***E*** for (original entry) or ***M*** for (modification).

[4] **Acctg Pd** *(numeric field, 4 positions).* Displays the accounting period date (*mmyy).* This field is system generated with data inferred from the Accounting Period Cutoff Reference Table (APCT). Note: The Accounting Period refers to the fiscal month and year, e.g., November 2000 is 02 01.

[5] **Vendor Code** *(alphanumeric field, max. of 11 positions).* Displays the FFIS vendor. This field is derived from the Feeder To FFIS Vendor Cross Reference Table (VCXT).

[6] **Trans Type** *(alphanumeric field, 2 positions).* Displays the transaction type. This field is derived from the General Ledger Interactive Description System Code Crosswalk Table (GLXT).

[7] **Name** *(alphanumeric field, max. of 30 positions).* Displays the vendor name. This field is derived from the VEND.

[8] **Effective Date** (*numeric field, 6 positions).* Displays the beginning date (*mmddyy*) of the order.

[9] **Comments** *(alphanumeric field, max. of 12 positions).* Displays the literal ***BAT,*** followed by the batch number.

[10] **Document Total** *(numeric field, max. of 15 positions).* Displays the document total. This field is system generated and is calculated by the interface program as the unsigned sum of all lines.

Line Fields

[11] **Line** *(numeric field, 3 positions).* This field is system generated by the interface program where the first line is assigned ***001***.

[12] **Ref Req–Line** *(alphanumeric field, 13 positions).* Displays the transaction code and document number of the requisition being referenced.

[13] **Budget FYs** *(numeric field, 2 positions)*. Displays the budget fiscal year.

[14] **Fund** *(alphanumeric field, max. of 3 positions).* Displays the fund.

[15] **Budget Org/Sub** *(alphanumeric field, 5 positions)*. Displays the budget organization. RD does not use the Budget Sub field.

[16] **Pgm** *(alphanumeric field, max. of 9 positions).* Displays the 9-position ACCS code, which resides in the program field. This field is derived from the ACXT.

[17] **BOC/Sub** *(numeric field, 4 positions).* Displays the budget object class.

[18] **Rptg** *(alphanumeric field, 2 positions).* Displays the 2-position special purpose code, which resides in the reporting category field.

[19] **Amount** *(numeric field, max. of 15 positions).* Displays the line amount. This field is derived from the object class amount.

[20] **I/D** *(alpha field, 1 position).* Displays the increase (***I***) or decrease (***D***) amount indicator.

[21] **P/F** *(alpha field, 1 position)*. Displays the partial (***P***) or final (***F***) payment indicator.

[22] **Descr** *(alphanumeric field, max. of 30 positions).* Displays the following information: **positions 1–6** represent the requisitioner; **positions 7–10** represent the requisition date; **positions 11–14** represent the requisition serial number; **positions 15–26** represent spaces; **positions 27–28** represent the agency code of employment; **position 29** represents an *; and **position 30** represents the FEDSTRIP GSA region.

FEDSTRIP Payment Voucher Document (FV)

The FV is generated by the Federal Standard Requisitioning and Issue Procedure System (FEDS also known as FEDSTRIP) interface to FFIS. The FV is used to record and automatically generate a disbursement to the Department of Defense (DoD). The FV references the previously created FO.

The FEDSTRIP interface generates the FV document for GSA invoices. Each generated FV consists of a header record and one or more lines. The header represents the payments made to DoD from a single agency, for a single invoice number. Each line represents a single 420-character record.

The FV is a clone of the baseline Payment Voucher Document (PV). **Figure 4:19** and **Figure 4:20** show the FV header and line screens.

After the FV is processed and accepted in FFIS, the transaction updates the following tables:

- Treasury Schedule Control Header and Treasury Schedule Control Line Inquiry tables (TSCH, TSCL)
- Voucher Header Inquiry and Voucher Line Inquiry Tables (PVHT, PVLT)
- Orders Header Inquiry and Purchase Order Accounting Line Inquiry Table (OBLH, OBLL)
- Budget Execution tables (APPR, APOR, FAPP, FAPR, FALC, FALT, ALOC, ALLT, SASP)
- General Ledger Balance Inquiry Table (GLBL)
- Cross-Reference tables (DXRF, VXRF, GIDT)

To access the FV through the Document Suspense File, see **Part 2,** **Using The Document Suspense File**.

The fields that are populated on the FV through the interface process are listed below:

```
COMMND:                 DOCID: FV [1]                          XX/XX/XX 16:18:46
STATUS:                 BATID:                    SEC2:
H-
                              PAYMENT VOUCHER DOCUMENT

   PV DATE: [2]           ACCTG PD: [3]      BUDGET FY:        FUND:
      ACTION:[4]          TRANS TYPE:     PROMPT PAY TYPE:     PV TYPE:
    SCHED PYMT DATE:           DESCR: [5]            D.O:      FA IND:
         REF DOC #:                                    ACCP/DEL DATE:
      VENDOR INV #:                    INV DATE:            LOG DATE:
    FY:      SCHEDULE CAT:          SCHEDULE TYP:     SCHEDULE NUMBER:
    VENDOR CODE: [6]                                DOCUMENT TOTAL: [7]
          NAME:                                        AGREEMENT #:
       ADDRESS1:                                     HOLDBACK TOT:
              2:                                    PMT SEQUENCE #:
              3:                                        INT REASON:
     CHECK TYPE: [8] AGENCY HEAD APPROVAL:    DISC LOST REASON:
     DISCOUNT %:                  / AMOUNT:               DAYS:
     DISCOUNT %:                  / AMOUNT:               DAYS:
     DISCOUNT %:                  / AMOUNT:               DAYS:
    COMMENTS TO PRINT: [9]
```

Figure 4:19. FEDSTRIP Payment Voucher Document (FV) header fields (Payment Voucher Document)

```
COMMND:                 DOCID: FV                                  XX/XX/XX 16:19:23
STATUS:                 BATID:                  SEC2:                000-000 OF 000
01-
          LINE #: [10]                  TRANS TYPE: [11]       LINE TYPE:
       REF DOC #: [12]                    REF LINE: [13]   DEL/ACCP DATE: [14]
    VENDOR INV #/LINE:[15]                INV DATE: [16]        LOG DATE: [17]

             BFY: [18]                      FUND: [19]     BUDGET ORG/SUB: [20]
    COST ORG/SUB:                        PROGRAM: [21]          BOC/SUB: [22]
             RPTG: [23]                      JOB:            REV SRCE/SUB:
      GL ACCOUNT:                  CLOSED BFYS:              CLOSED FUND:

          AMOUNT: [24]                    I/D: [25]                  P/F: [26]
        QUANTITY:                         ADV:                INT REASON:
     DESCRIPTION: [27]                                   DISC LOST REASON:
     RELATED GBL:                       OUTS REF AMT: [28]
      DISCOUNT %:                   / AMOUNT:                  DAYS:
      DISCOUNT %:                   / AMOUNT:                  DAYS:
      DISCOUNT %:                   / AMOUNT:                  DAYS:
```

Figure 4:20. FEDSTRIP Payment Voucher Document (FV) line fields (Payment Voucher Document)

Command Fields

[1] **DocID** *(alphanumeric field, max. of 15 positions).* Displays the transaction code (***FV***), the sec1 code (i.e., the 2 position division code) and the document number (*max. of 11 positions)*. The document number is as follows: **positions 1–6** represent the FEDSTRIP bill number. (If the FEDSTRIP bill number is not 6 positions, the trailing spaces are filled with asterisks.); and **positions 7–11** represent the run date from the Dates Table (DATE) in Julian format.

Header Fields

[2] **PV Date** (*numeric field, 6 positions).* Displays the date (*mmddyy*) of the document. This field is system generated with data inferred from the date parameter file, if specified, or from the DATE.

[3] **Acctg Pd** *(numeric field, 4 positions).* Displays the open accounting period date (*mmyy).* This field is system generated with data inferred from the APCT. Note: The Acctg Pd refers to the fiscal month and year, e.g., November 2000 is 02 01.

[4] **Action** *(alpha field, 1 position).* The system generates ***E*** in this field which indicates the document is being added.

[5] **Descr** *(alphanumeric field, max. of 12 positions).* Displays the literal ***BAT,*** followed by the batch number.

[6] **Vendor Code** *(alphanumeric field, max. of 11 positions).* Displays the vendor code. This field is derived from the VCXT.

[7] **Document Total** *(numeric field, max. of 15 positions).* Displays the document total. This field is system generated and is calculated by the interface program as the unsigned sum of all lines.

[8] **Check Type** *(alpha field, 1 position*). The system generates ***C*** in this field which indicates a check insert card is generated with the payment.

[9] **Comments To Print** *(alphanumeric field, max. of 40 positions*). Displays the following information: **positions 1–20** represent the literal *FEDSTRIP/DoD PAYMENT*; **positions 21–34** represent the literal *REF BILL NO.*; and **positions 35–40** represent the FEDSTRIP bill number.

Line Fields

[10] **Line #** *(numeric field, 3 positions).* This field is system generated by the interface program where the first line is assigned ***001***.

[11] **Trans Type** *(alphanumeric field, 2 positions).* Displays the transaction type. This field is derived from the GLXT.

[12] **Ref Doc #** *(alphanumeric field, 13 positions).* Displays the referenced document number. This field is derived from the GIDT.

[13] **Ref Line** *(numeric field, 3 positions).* Displays the referenced document line number. This field is derived from the GIDT.

[14] **Del/Accp Date** (*numeric field, 6 positions).* Displays the accept date (*mmddyy*). This field is system generated with data inferred from the schedule confirm date.

[15] **Vendor Inv #/Line** (*numeric field, max. of 11 positions).* Displays the last 6 positions of the FEDSTRIP Bill Number.

[16] **Inv Date** (*numeric field, 6 positions).* Displays the vendor invoice date (*mmddyy*). This field is system generated with data inferred from the schedule confirm date.

[17] **Log Date** (*numeric field, 6 positions).* Displays the invoice log date (*mmddyy*). This field is system generated with data inferred from the schedule confirm date.

[18] **BFY** *(numeric field, 2 positions).* Displays the budget fiscal year.

[19] **Fund** *(alphanumeric field, max. of 3 positions).* Displays the fund.

[20] **Budget Org/Sub** *(alphanumeric field, 5 positions).* Displays the budget organization. RD does not use the Budget Sub field.

[21] **Program** *(alphanumeric field, max. of 9 positions).* Displays the 9-position ACCS code, which resides in the program field. This field is derived from the ACXT.

[22] **BOC/Sub** *(numeric field, 4 positions).* Displays the budget object class.

[23] **Rptg** *(alphanumeric field, 2 positions).* Displays the 2-position special purpose code, which resides in the reporting category field.

[24] **Amount** *(numeric field, max. of 15 positions).* Displays the line amount. This field is derived from the object class amount.

[25] **I/D** *(alpha field, 1 position).* Displays the increase (***I***) or decrease (***D***) amount indicator.

[26] **P/F** *(alpha field, 1 position).* Displays the partial (***P***) or final (***F***) payment indicator.

Line Fields *(cont'd)*

27 **Description** *(alphanumeric field, max. of 30 positions).* Displays the following information: **positions 1–6** represent the requisitioner; **positions 7–10** represent the requisition date; **positions 11–14** represent the requisition serial number; **position 15** is a space; **positions 16–25** represent the *QTY BILLED*; and **positions 26–30** represent the FEDSTRIP quantity.

28 **Outs Ref Amt** *(numeric field, max. of 15 positions).* Displays the outstanding reference amount.

FEDSTRIP OPAC Direct Disbursement Document (OD)

The OD is generated by the Federal Standard Requisitioning and Issue Procedure System (FEDS also known as FEDSTRIP) interface to FFIS. The OD is used to record Online Payment and Collection System (OPAC) disbursements in FFIS.

The FEDSTRIP OPAC interface generates the OD document for GSA invoices. Each generated OD consists of a header record and up to 50 OPAC disbursement lines made to a specific vendor for a single requisitioner's purchases in a single day.

The OD is a clone of the baseline Direct Disbursement Document (DD). **Figure 4:21** and **Figure 4:22** show the OD header and line screens.

After the OD is processed and accepted in FFIS, the transaction updates the following tables:

- Voucher Header Inquiry and Voucher Line Inquiry Tables (PVHT, PVLT)
- Orders Header Inquiry and Purchase Order Accounting Line Inquiry Table (OBLH, OBLL)
- Budget Execution tables (APPR, APOR, FAPP, FAPR, FALC, FALT, ALOC, ALLT, SASP)
- General Ledger Balance Inquiry Table (GLBL)
- Cross-Reference tables (DXRF, VXRF, GIDT)

To access the OD through the Document Suspense File, see **Part 2,** **Using The Document Suspense File**.

The fields that are populated on the OD through the interface process are listed below:

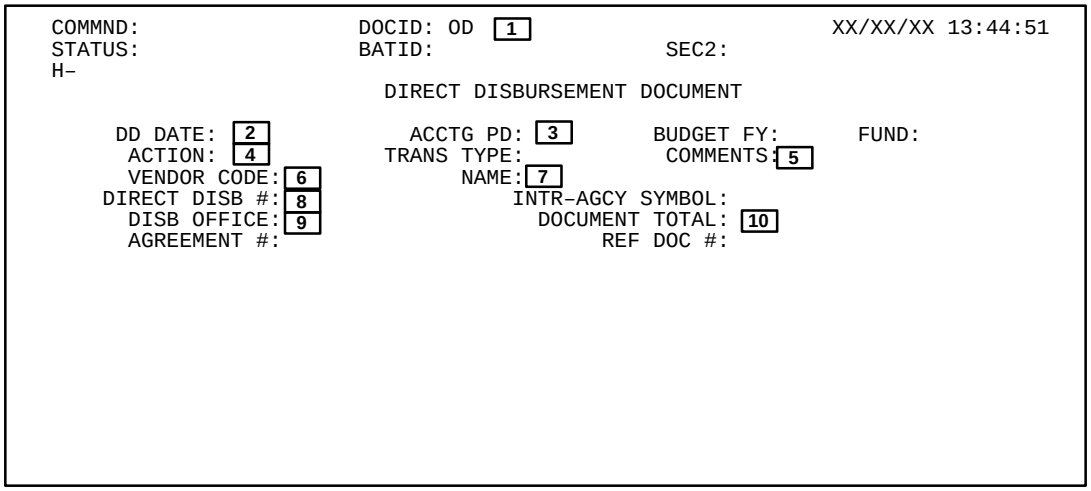

Figure 4:21. FEDSTRIP OPAC Direct Disbursement Document (OD) header fields (Direct Disbursement Document)

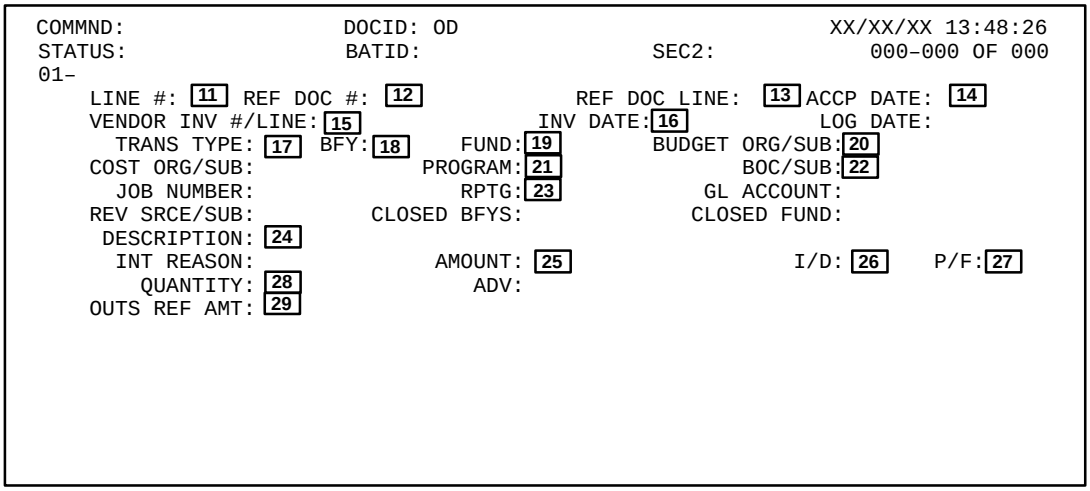

Figure 4:22. FEDSTRIP OPAC Direct Disbursement Document (OD) line fields (Direct Disbursement Document)

Command Fields

[1] **DocID** *(alphanumeric field, max. of 15 positions).* Displays the transaction code (***OD***), the sec1 code (i.e., the 2 position division code) and the document number (*max. of 11 positions)*. The document number for a Type 1 document is as follows: **positions 1–6** represent the register schedule number; **positions 7–9** represent the sequential number derived from the ADNT; and **positions 10–11** represent the sequential payment counter derived from the Last Payment entry in the GIDT. The document number for a Type 2 document is as follows: **position 1** displays a ***C*** which identifies it as a Type 2 document; **positions 2–7** represent the register schedule number; and **positions 8–10** represent the sequential number derived from the ADNT.

Header Fields

[2] **DD Date** (*numeric field, 6 positions).* Displays direct disbursement date (*mmddyy*). This field is system generated with data inferred from the schedule confirm date.

[3] **Acctg Pd** *(numeric field, 4 positions).* Displays the accounting period date (*mmyy).* This field is system generated with data inferred from the APCT using the parameter date. If the parameter date is blank, the date is inferred from the DATE. Note: The Accounting Period refers to the fiscal month and year, e.g., November 2000 is 02 01.

[4] **Action** *(alpha field, 1 position).* The system generates ***E*** for (original entry).

[5] **Comments** *(alphanumeric field, max. of 12 positions).* Displays ***BAT,*** followed by the batch number.

[6] **Vendor Code** *(alphanumeric field, max. of 11 positions).* Displays the FFIS vendor. This field is derived from the VCXT.

[7] **Name** *(alphanumeric field, max. of 30 positions).* Displays the vendor name. This field is derived from the VEND.

[8] **Direct Disb #** *(numeric field, 11 positions).* Displays the following information: **positions 1–6** represent the last 6 positions of the OPAC Bill Number and **positions 7–11** represent the 5 position Julian OPAC Bill Date (Treasury Accomplished Date).

[9] **Disb Office** *(alphanumeric field, max. of 4 positions).* Displays the Disbursing Office code.

[10] **Document Total** *(numeric field, max. of 15 positions).* Displays the document total. This field is system generated and is calculated by the interface program as the unsigned sum of all lines.

Line Fields

[11] **Line #** *(numeric field, 3 positions).* This field is system generated by the interface program where the first line is assigned ***001***.

[12] **Ref Doc #** *(alphanumeric field, 13 positions).* Displays the referenced document number. This field is derived from the Generic Interface Document Cross-Reference Table (GIDT).

[13] **Ref Doc Line** *(numeric field, 3 positions).* Displays the referenced document line number. This field is derived from the GIDT.

[14] **Accp Date** (*numeric field, 6 positions).* Displays the accept date (*mmddyy*). This field is system generated with data inferred from the schedule confirm date.

[15] **Vendor Inv #/Line** (*numeric field, max. of 11 positions).* Displays the last 6 positions of the OPAC Bill Number.

[16] **Inv Date** (*numeric field, 6 positions).* Displays the vendor invoice date (*mmddyy*). This field is system generated with data inferred from the schedule confirm date.

[17] **Trans Type** *(alphanumeric field, 2 positions).* Displays the transaction type. This field is derived from the GLXT.

[18] **BFY** *(numeric field, 2 positions).* Displays the budget fiscal year.

[19] **Fund** *(alphanumeric field, max. of 3 positions).* Displays the fund.

[20] **Budget Org/Sub** *(alphanumeric field, 5 positions).* Displays the budget organization. RD does not use the Budget Sub field.

[21] **Program** *(alphanumeric field, max. of 9 positions).* Displays the 9-position ACCS code, which resides in the program field. This field is derived from the ACXT.

[22] **BOC/Sub** *(numeric field, max. of 6 positions).* Displays the budget object class.

[23] **Rptg** *(alphanumeric field, 2 positions).* Displays the 2-position special purpose code, which resides in the reporting category field.

Line Fields *(cont'd)*

24 **Description** *(alphanumeric field, max. of 30 positions).* Displays the following information: **positions 1–6** represent the requisitioner; **positions 7–10** represent the requisition date; **positions 11–14** represent the requisition serial number; **position 15** is a space; **positions 16–25** represent the *QTY BILLED*; and **positions 26–30** represent the FEDSTRIP quantity.

25 **Amount** *(numeric field, max. of 15 positions).* Displays the line amount. This field is derived from the object class amount.

26 **I/D** *(alpha field, 1 position).* Displays the increase (***I***) or decrease (***D***) amount indicator.

27 **P/F** *(alpha field, 1 position).* Displays the partial (***P***) or final (***F***) payment indicator.

28 **Quantity** *(numeric field, max. of 9 positions).* Displays the FEDSTRIP quantity.

29 **Outs Ref Amt** *(numeric field, max. of 15 positions).* Displays the outstanding reference amount.

FEDSTRIP Standard Voucher Document (SF)

The SF is generated by the Federal Standard Requisitioning and Issue Procedure System (FEDS) interface to FFIS. The SF is used to record suspense postings, reversals, and charge-backs in FFIS.

Each generated SF consists of a header record and one line that represents one suspense posting, reversal or charge-back, made in a single day.

The SF is a clone of the baseline Standard Voucher Document (SV). **Figure 4:23** and **Figure 4:24** show the SF header and line screens.

After the SF is processed and accepted in FFIS, the transaction updates the following tables:

- Journal Voucher and Standard Journal Inquiry Table (JVLT)
- Self-Reversing Journal Voucher Inquiry Table (RVJV)
- Budget Execution tables (APPR, APOR, FAPP, FAPR, FALC, FALT, ALOC, ALLT, SASP)
- Cross-Reference tables (DXRF, VXRF)

To access the SF through the Document Suspense File, see **Part 2, Using The Document Suspense File**.

The fields that are populated on the SF through the interface process are listed below:

```
COMMND:                 DOCID: SF [1]                          XX/XX/XX 13:45:00
STATUS:                 BATID:                  SEC2:
H-
                              STANDARD VOUCHER DOCUMENT

               SV DATE: [2]                        ACCOUNTING PERIOD: [3]
                ACTION: [4] EXPENSE(E), REVENUE(R), GL(G), BUDGET(B): [5]
            BUDGET FYS:                                          FUND:
       REVERSAL PERIOD:
               COMMENT:                   BUDGET OVERRIDE IND:
          REF TRANS ID:

        DOCUMENT TOTAL: [6]

           DESCRIPTION:
```

Figure 4:23. FEDSTRIP Standard Voucher Document (SF) header fields (Standard Voucher Document)

```
COMMND:                 DOCID: SF                              XX/XX/XX 10:21:07
STATUS:                 BATID:                  SEC2:             000-000 OF 000
01-
       LINE NUMBER: [7]            TRANS TYPE: [8]     EXP/REV/GL/BUD: [9]
        BUDGET FYS: [10]                 FUND: [11]          DIVISION:
    BUDGET ORG/SUB: [12]          COST ORG/SUB:                   PGM: [13]
    BOC/REV SOURCE: [14]     SUB BOC/SUB SRCE:     JOB:              RPTG: [15]
       CLOSED BFYS:             CLOSED FUND:
    VENDOR: [16]          NAME: [17]                            QUANT:
    SCHD FISC YR:      SCHD CAT:     SCHD TYP:     SCHD NO:
    D.O.: [18]      GUEST SYMBOL:
    REF TRAN ID:                    DOC TYP:   AGREE #:                 ADV:
    INVOICE NO:             INVOICE DATE:          INVOICE LINE:
    AMOUNT: [19]             INC/DEC IND: [20] ACC DATE: [21]        OBL FY:
    DESCRIPTION: [22]                                TREAS NO: [23]
```

Figure 4:24. FEDSTRIP Standard Voucher Document (SF) line fields (Standard Voucher Document)

Command Fields

1 **DocID** *(alphanumeric field, max. of 15 positions).* Displays the transaction code (***SF***), the sec1 code (i.e., the 2 position division code) and the document number (*max. of 11 positions)*. **Positions 1–6**, represent the register schedule number and **positions 7–11** represent the sequential number derived from the ADNT.

Header Fields

2 **SV Date** (*numeric field, 6 positions).* Displays the date (*mmddyy*) of the document. This field is system generated with data inferred from the date parameter file, if specified, or from the DATE.

3 **Accounting Period** *(numeric field, 4 positions).* Displays the open accounting period date (*mmyy).* This field is system generated with data inferred from the APCT. Note: The Accounting Period refers to the fiscal month and year, e.g., November 2000 is 02 01.

4 **Action** *(alpha field, 1 position).* The system generates ***E*** in this field which indicates the document is being added.

5 **Expense (E), Revenue (R), GL (G), Budget (B)** *(alpha field, 1 position).* Displays the expense, revenue, general ledger, or budget indicator.

6 **Document Total** *(numeric field, max. of 15 positions).* Displays the document total. This field is system generated and is calculated by the interface program as the unsigned sum of all lines.

Line Fields

7 **Line Number** *(numeric field, 3 positions).* This field is system generated by the interface program where the first line is assigned ***001***.

8 **Trans Type** *(alphanumeric field, 2 positions).* Displays the transaction type.

9 **Exp/Rev/GL/Bud** *(alpha field, 1 position).* Displays the expense, revenue, general ledger, or budget indicator.

10 **Budget FYs** *(numeric field, 2 positions).* Displays the budget fiscal year.

11 **Fund** *(alphanumeric field, max. of 3 positions).* Displays the fund.

12 **Budget Org/Sub** *(alphanumeric field, 5 positions).* Displays the budget organization. RD does not used the Budget Sub field.

13 **Pgm** *(alphanumeric field, max. of 9 positions).* Displays the 9-position ACCS code, which resides in the program field. This field is derived from the ACXT.

14 **BOC/Rev Source** *(numeric field, max. of 4 positions).* Displays the budget object code based on the Exp/GL/Rev/Bud indicator. If Field 9 is ***E*** or ***R***, then this field is mapped to the object class. Otherwise, this field is blank.

15 **Rptg** *(alphanumeric field, 2 positions).* Displays the 2-position special purpose code, which resides in the reporting category field.

16 **Vendor** *(alphanumeric field, max. of 11 positions).* Displays the vendor code derived from the VCXT.

17 **Name** *(alphanumeric field, max. of 30 positions).* Displays the following information: **positions 1–6** represent the register schedule number; **position 7** is an *; **positions 8–11** represent the requisition serial number; **position 12** is an*; **positions 13–17** represent the FEDSTRIP quantity; and **positions 18–30** represent the FEDSTRIP stock number.

18 **D. O.** *(alphanumeric field, max. of 4 positions).* Displays the disbursing office number with **positions 1–2** representing the DO code**.**

19 **Amount** *(numeric field, max. of 15 positions).* Displays the line amount. This field is derived from the object class amount.

20 **Inc/Dec Ind** *(alpha field, 1 position).* Displays the increase (***I***) or decrease (***D***) amount indicator.

21 **Acc Date** (*numeric field, 6 positions).* Displays the accomplished date (*mmddyy*) derived from the schedule confirmation date.

22 **Description** *(alphanumeric field, max. of 30 positions).* Displays the following information: **positions 1–6** represent the register schedule number; **position 7** is an *; **positions 8–13** represent the FEDSTRIP bill number; **position 14** is an *; and **position 15** represents the FEDSTRIP GSA region.

23 **Treas No** *(numeric field, max. of 11 positions).* Displays the schedule number.

FTSP Direct Disbursement Document (DF)

The DF is generated by the Federal Telephone Payment System (FTSP) interface to FFIS. The DF is used to record a no-check disbursement in FFIS for FTSP invoices detailing FTS charges.

The FTSP interface generates the DF document for the AD–955, GSA Telephone Transmittal and GSA billings. Each generated DF consists of a header record and one or more lines. DF headers represent the portion of a specific invoice charged to a specific account number. Each line represents the charges specified on a single 420-character record and the accounting to be charged for a specific percentage of the expenses for a specified type of service. The total amount of all lines equals the header record amount.

The DF is a clone of the baseline DD. **Figure 4:25** and **Figure 4:26** show the DF header and line screens.

After the DF is processed and accepted in FFIS, the transaction updates the following tables:

- Voucher Header Inquiry and Voucher Line Inquiry Tables (PVHT, PVLT)
- Requisition Header Inquiry Table (REQH)
- Requisition Accounting Line Table (REQL)
- Budget Execution tables (APPR, APOR, FAPP, FAPR, FALC, FALT, ALOC, ALLT, SASP)
- General Ledger Balance Inquiry Table (GLBL)
- Cross-Reference tables (DXRF, VXRF, GIDT)

To access the DF through the Document Suspense File, see **Part 2,** **Using The Document Suspense File**.

The fields that are populated on the DF through the interface process are listed below.

```
COMMND:                  DOCID: DF  1                          XX/XX/XX 13:44:51
STATUS:                  BATID:                    SEC2:
H–
                           DIRECT DISBURSEMENT DOCUMENT

      DD DATE: 2            ACCTG PD: 3       BUDGET FY:       FUND:
        ACTION:           TRANS TYPE:           COMMENTS: 4
        VENDOR CODE: 5          NAME: 6
     DIRECT DISB #: 7               INTR–AGCY SYMBOL:
        DISB OFFICE: 8                DOCUMENT TOTAL: 9
        AGREEMENT #:                       REF DOC #:
```

Figure 4:25. FTSP Direct Disbursement Document (DF) header fields (Direct Disbursement Document)

```
COMMND:                  DOCID: DF                              XX/XX/XX 13:48:26
STATUS:                  BATID:                  SEC2:             000–000 OF 000
01–
    LINE #: 10  REF DOC #:  11              REF DOC LINE: 12  ACCP DATE:
    VENDOR INV #/LINE: 13                INV DATE: 14          LOG DATE:
      TRANS TYPE: 15  BFY: 16    FUND:  17      BUDGET ORG/SUB: 18
    COST ORG/SUB:              PROGRAM:  19             BOC/SUB: 20
      JOB NUMBER:                RPTG:  21         GL ACCOUNT:
    REV SRCE/SUB:          CLOSED BFYS:           CLOSED FUND:
     DESCRIPTION: 22
      INT REASON:              AMOUNT:  23                 I/D: 24    P/F: 25
        QUANTITY:                 ADV:
    OUTS REF AMT: 26
```

Figure 4:26. FTSP Direct Disbursement Document (DF) line fields (Direct Disbursement Document)

Command Fields

[1] **DocID** *(alphanumeric field, max. of 15 positions).* Displays the transaction code (***DF***), the sec1 code (i.e., the 2 position division code) and the document number (*max. of 11 positions)*. **Positions 1–6** represent the register schedule number**; positions 7–9** represent the sequential number derived from the ADNT**;** and **position 10** is a ***P*** for payment.

Header Fields

[2] **DD Date** (*numeric field, 6 positions).* Displays direct disbursement date (*mmddyy*). This field is system generated with data inferred from the date parameter file, if specified, or from the DATE.

[3] **Acctg Pd** *(numeric field, 4 positions).* Displays the accounting period date (*mmyy).* This field is system generated with data inferred from the APCT using the parameter date. Note: The Accounting Period refers to the fiscal month and year, e.g., November 2000 is 02 01.

[4] **Comments** *(alphanumeric field, max. of 12 positions).* Displays the batch number from the feeder.

[5] **Vendor Code** *(alphanumeric field, max. of 11 positions).* Displays the FFIS vendor. This field is derived from the VCXT.

[6] **Name** *(alphanumeric field, max. of 30 positions).* Displays the vendor name. This field is derived from the VEND.

[7] **Direct Disb #** *(numeric field, 11 positions).* Displays the following information: **positions 1–6** represent the last 6 positions of the OPAC Bill Number and **positions 7–11** represent the 5 position Julian OPAC Bill Date (Treasury Accomplished Date).

[8] **Disb Office** *(alphanumeric field, max. of 4 positions).* Displays the Disbursing Office code.

[9] **Document Total** *(numeric field, max. of 15 positions).* Displays the document total. This field is system generated and is calculated by the interface program as the unsigned sum of all lines.

Line Fields

[10] **Line #** *(numeric field, 3 positions).* This field is system generated by the interface program where the first line is assigned ***001***.

[11] **Ref Doc #** *(alphanumeric field, max. of 13 positions)*. Displays the reference document transaction code and number.

[12] **Ref Doc Line** *(alphanumeric field, max. of 3 positions)*. Displays the reference transaction line.

[13] **Vendor Inv #/Line** (*numeric field, max. of 11 positions)*. Displays the following information: **positions 1–2** represent the prefix literal ***J0***; **positions 3–8** represent the schedule number; and **positions 9–11** represent ***001***, an incremental for each line of the DF.

[14] **Inv Date** (*numeric field, 6 positions).* Displays the vendor invoice date (*mmddyy*). The month *(mm)* and year *(yy)* are inferred from the FTSP date and the interface sets the day *(dd)* to ***22***.

[15] **Trans Type** *(alphanumeric field, 2 positions).* Displays the transaction type. This field is derived from the GLXT.

[16] **BFY** *(numeric field, 2 positions)*. Displays the budget fiscal year.

[17] **Fund** *(alphanumeric field, max. of 3 positions).* Displays the fund code.

[18] **Budget Org/Sub** *(alphanumeric field, 5 positions)*. Displays the budget organization. RD does not use the Budget Sub field.

[19] **Program** *(alphanumeric field, max. of 9 positions)*. Displays the 9-position ACCS code, which resides in the program field.

[20] **BOC/Sub** *(numeric field, 4 positions).* Displays the budget object class.

[21] **Rptg** *(alphanumeric field, 2 positions).* Displays the 2-position special purpose code, which resides in the reporting category field.

[22] **Description** *(alphanumeric field, max. of 30 positions).* Displays the following information: **positions 1–8** represent the literal *CUST NO.*; **positions 9–14** represent the FTSP customer number; **positions 15–22** represent the literal *BILL DTE*; and **positions 23–26** represent the FTSP date.

[23] **Amount** *(numeric field, max. of 15 positions).* Displays the line amount. This field is derived from the object class amount.

[24] **I/D** *(alpha field, 1 position).* Displays the increase (***I***) or decrease (***D***) amount indicator.

[25] **P/F** *(alpha field, 1 position).* Displays the partial (***P***) or final (***F***) indicator.

[26] **Outs Ref Amt** *(numeric field, max. of 15 positions).* Displays the outstanding obligation amount.

FTSP Accrual/Suspense Document (VF)

The VF is generated by the FTSP interface to FFIS. The VF is used to record end-of-month accruals for FTSP which reverse at the beginning of the subsequent month. The VF is also used to record various suspense postings for FTSP.

Each generated VF consists of a header record and one or more lines. VF headers represent the monthly accrual amount by Customer Switchboard Number. The first line represents each accrual, and the second line represents the commitment reversal for the amount of the accrual.

The VF is a clone of the baseline SV. **Figure 4:27** and **Figure 4:28** show the VF header and line screens.

After the VF is processed and accepted in FFIS, the transaction updates the following tables:

- Journal Voucher and Standard Journal Inquiry Table (JVLT)
- Self-Reversing Journal Voucher Inquiry Table (RVJV)
- Budget Execution tables (APPR, APOR, FAPP, FAPR, FALC, FALT, ALOC, ALLT, SASP)
- Cross-Reference tables (DXRF, VXRF)

To access the VF through the Document Suspense File, see **Part 2,** **Using The Document Suspense File**.

The fields that are populated on the VF through the interface process are listed below.

```
COMMND:                 DOCID: VF [1]                          XX/XX/XX 13:45:00
STATUS:                 BATID:                  SEC2:
H-
                              STANDARD VOUCHER DOCUMENT

              SV DATE: [2]                          ACCOUNTING PERIOD: [3]
               ACTION:    EXPENSE(E), REVENUE(R), GL(G), BUDGET(B):
          BUDGET FYS:                                          FUND:
      REVERSAL PERIOD:
              COMMENT:                    BUDGET OVERRIDE IND:
         REF TRANS ID:

       DOCUMENT TOTAL: [4]

          DESCRIPTION:
```

Figure 4:27. FTSP Accrual/Suspense Document (VF) header fields (Standard Voucher Document)

```
COMMND:                 DOCID: VF                              XX/XX/XX 10:21:07
STATUS:                 BATID:                  SEC2:             000-000 OF 000
01-
       LINE NUMBER: [5]            TRANS TYPE: [6]     EXP/REV/GL/BUD: [7]
        BUDGET FYS: [8]                    FUND: [9]           DIVISION: [10]
    BUDGET ORG/SUB: [11]          COST ORG/SUB:                    PGM: [12]
    BOC/REV SOURCE: [13]     SUB BOC/SUB SRCE:     JOB:               RPTG: [14]
       CLOSED BFYS:                CLOSED FUND:
    VENDOR: [15]          NAME: [16]                              QUANT:
    SCHD FISC YR:      SCHD CAT:     SCHD TYP:     SCHD NO:
    D.O.:  [17]     GUEST SYMBOL:
    REF TRAN ID:                    DOC TYP:   AGREE #:                  ADV:
    INVOICE NO:              INVOICE DATE:          INVOICE LINE:
    AMOUNT: [18]              INC/DEC IND: [19] ACC DATE:  [20]        OBL FY:
    DESCRIPTION: [21]                                  TREAS NO:  [22]
```

Figure 4:28. FTSP Accrual/Suspense Document (VF) line fields (Standard Voucher Document)

Command Fields

1 **DocID** *(alphanumeric field, max. of 15 positions).* Displays the transaction code (***VF***), the sec1 code (i.e., the 2 position division code) and the document number (*max. of 11 positions).* The document number for OPAC suspense accounting records is as follows: **positions 1–6** represent the last 6-positions of the OPAC bill number**; positions 7–10** represent the literal *CAPS* or *SUSP***;** and **position 11** is an ***.** The document number for charging an agency's accounting is as follows: **positions 1–6** represent the register schedule number**; positions 7–10** represent the sequential number derived from the ADNT**;** and **position 11** represent the literal *R* (reversal)**.**

Header Fields

2 **SV Date** (*numeric field, 6 positions).* Displays the date (*mmddyy*) of the document. This field is system generated with data inferred from the date parameter file, if specified, or from the DATE.

3 **Accounting Period** *(numeric field, 4 positions).* Displays the open accounting period date (*mmyy).* This field is system generated with data inferred from the APCT. Note: The accounting period refers to the fiscal month and year, e.g., November 2000 is 02 01.

4 **Document Total** *(numeric field, max. of 15 positions).* Displays the document total. This field is system generated and is calculated by the interface program as the unsigned sum of all lines.

Line Fields

5 **Line Number** *(numeric field, 3 positions).* This field is system generated by the interface program where the first line is assigned ***001***.

6 **Trans Type** *(alphanumeric field, 2 positions).* Displays the transaction type. This field is derived from the GLXT.

7 **Exp/Rev/GL/Bud** *(alpha field, 1 position).* Displays the expense, revenue, general ledger, or budget indicator.

8 **Budget FYs** *(numeric field, 2 positions).* Displays the budget fiscal year.

9 **Fund** *(numeric field, max. of 3 positions).* Displays the fund.

10 **Division** *(alphanumeric field, 2 positions).* Displays the division.

11 **Budget Org/Sub** *(alphanumeric field, 5 positions).* Displays the budget organization. RD does not use the Budget Sub field.

12 **Pgm** *(alphanumeric field, max. of 9 positions).* Displays the 9-position ACCS code, which resides in the program field. This field is derived from the ACXT.

13 **BOC/Rev Source** *(numeric field, max. of 4 positions).* Displays the budget object code based on the Exp/GL/Rev/Bud indicator. If **Field 7** is ***E*** or ***R***, then this field is mapped to the object class. Otherwise the field is left blank.

14 **Rptg** *(alphanumeric field, 2 positions).* Displays the 2-position special purpose code, which resides in the reporting category field.

15 **Vendor** *(alphanumeric field, max. of 11 positions).* Displays the FFIS vendor. This field is derived from the VCXT.

16 **Name** *(alphanumeric field, max. of 30 positions).* Displays the vendor name. This field is derived from the VEND.

17 **D. O.** *(alphanumeric field, max. of 4 positions).* Displays the disbursing office number with **positions 1–2** representing the DO code**.**

18 **Amount** *(numeric field, max. of 15 positions).* Displays the line amount. This field is derived from the object class amount.

19 **Inc/Dec Ind** *(alpha field, 1 position).* Displays the increase (***I***) or decrease (***D***) amount indicator.

20 **Acc Date** (*numeric field, 6 positions).* Displays the accomplished date (*mmddyy*) derived from the schedule confirmation date.

21 **Description** *(alphanumeric field, max. of 30 positions).* Displays the following information: **positions 1–6** represent the register schedule number; **positions 7** is an *; **positions 8–13** represent the FTSP bill number; **position 14** is an *; and **position 15** represents the FTSP GSA region.

22 **Treas No** *(numeric field, max. of 11 positions).* Displays the schedule number.

MPOL No-Check Disbursement Document (DM)

The DM is generated by the GSA Motor Pool System (MPOL) interface to FFIS. The DM is used to record the disbursement information in FFIS by providing accounting data (i.e., accounting event, accounting classification codes, dollar amount, and object code), as well as, descriptive data elements to support agency and external reports.

The MPOL interface generates the DM document for the AD–643, Transmittal GSA Motor Pool, the AD–644, Transportation Services Distribution – GSA Motor Pool, and invoices. The interface creates a single DM document, which represents the portion of a specific invoice charged to a Billed Office Address Code (BOAC) and user-defined fund code for MPOL. Each DM line represents the charges specified on the record and the accounting to be charged for a specific percentage of the expenses for a specified type of service. The total amount of all the lines consolidates to the header record. Various fields on the DM are system generated with data from the MPOL interface. The BOAC number, fund code, and date are part of the document ID number. The invoice number is populated in the Direct Disbursement number field on the header record. The register number, the vehicle number, the body type, the sales code, and the region code are populated in the Description field in the line record.

The DM is a clone of the baseline Direct Disbursement Document (DD). **Figure 4:29** and **Figure 4:30** show the DM header and line screens.

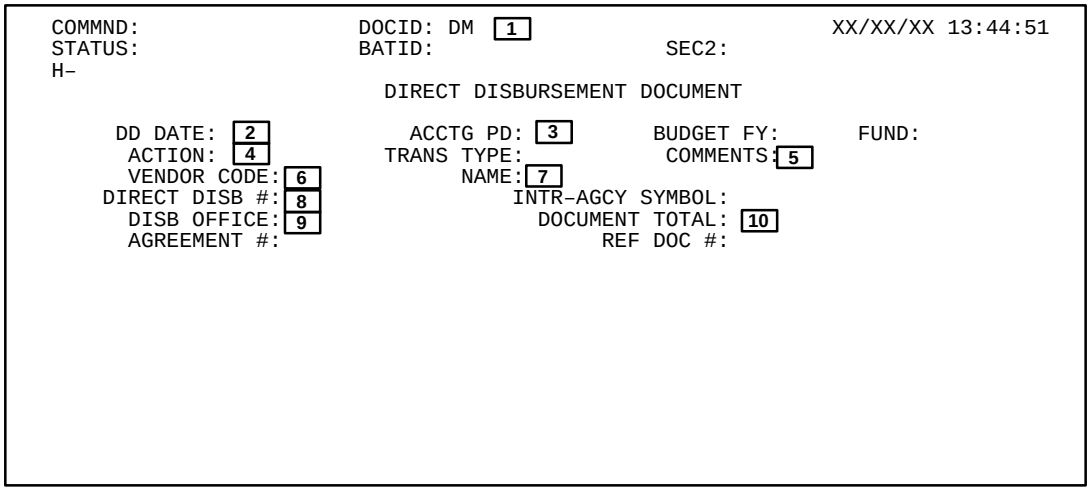

Figure 4:29. MPOL No-check Disbursement Document (DM) header fields (Direct Disbursement Document)

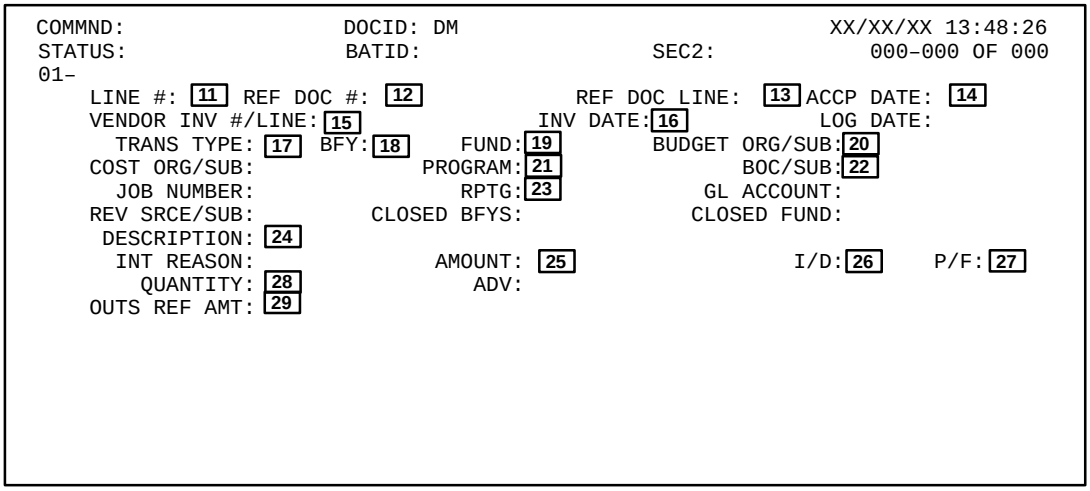

Figure 4:30. MPOL No-Check Disbursement Document (DM) line fields (Direct Disbursement Document)

After the DM is processed and accepted in FFIS, the transaction updates the following tables:

- Voucher Header Inquiry and Voucher Line Inquiry Tables (PVHT, PVLT)
- Orders Header Inquiry and Purchase Order Accounting Line Inquiry Tables (OBLH, OBLL)
- Requisition Header Inquiry and Requisition Accounting Line Inquiry Tables REQH, REQL)
- Budget Execution tables (ALOC, ALLT, SASP)
- General Ledger Balance Inquiry Table (GLBL)
- Generic Interface Document Cross-Reference Table (GIDT)

To access the DM through the Document Suspense File, see **Part 2, Using the Document Suspense File**.

The fields that are populated on the DM through the interface process are listed below:

Command Fields

[1] **DocID** *(alphanumeric field, max. of 15 positions).* Displays the transaction code (***DM***), the sec1 code (i.e., the 2 position division code) and the document number (*max. of 11 positions)*. **Positions 1–6** represent the register schedule number**; positions 7–9** represent the sequential number derived from the ADNT; and **positions 10–11** represent the sequential payment counter derived from the Last Payment entry in the GIDT.

Header Fields

[2] **DD Date** (*numeric field, 6 positions).* Displays direct disbursement date (*mmddyy*). This field is system generated with data inferred from the schedule confirm date.

[3] **Acctg Pd** *(numeric field, 4 positions).* Displays the accounting period date (*mmyy).* This field is system generated with data inferred from the APCT using the parameter date. If the parameter date is blank, the date is inferred from the DATE. Note: The Accounting Period refers to the fiscal month and year, e.g., November 2000 is 02 01.

[4] **Action** *(alpha field, 1 position).* The system generates ***E*** for (original entry).

[5] **Comments** *(alphanumeric field, max. of 12 positions).* Displays ***BAT,*** followed by the batch number.

[6] **Vendor Code** *(alphanumeric field, max. of 11 positions).* Displays the FFIS vendor. This field is derived from the VCXT.

[7] **Name** *(alphanumeric field, max. of 30 positions).* Displays the vendor name. This field is derived from the VEND.

[8] **Direct Disb #** *(numeric field, 11 positions).* Displays the following information: **positions 1–6** represent the last 6 positions of the OPAC Bill Number and **positions 7–11** represent the 5 position Julian OPAC Bill Date (Treasury Accomplished Date).

[9] **Disb Office** *(alphanumeric field, max. of 4 positions).* Displays the Disbursing Office code.

[10] **Document Total** *(numeric field, max. of 15 positions).* Displays the document total. This field is system generated and is calculated by the interface program as the unsigned sum of all lines.

Line Fields

[11] **Line #** *(numeric field, 3 positions).* This field is system generated by the interface program where the first line is assigned ***001***.

[12] **Ref Doc #** *(alphanumeric field, 13 positions).* Displays the referenced document number. This field is derived from the GIDT.

[13] **Ref Doc Line** *(numeric field, 3 positions).* Displays the referenced document line number. This field is derived from the GIDT.

[14] **Accp Date** (*numeric field, 6 positions).* Displays the accept date (*mmddyy*). This field is system generated with data inferred from the schedule confirm date.

[15] **Vendor Inv #/Line** (*numeric field, max. of 11 positions).* Displays the last 6 positions of the OPAC Bill Number.

[16] **Inv Date** (*numeric field, 6 positions).* Displays the vendor invoice date (*mmddyy*). This field is system generated with data inferred from the schedule confirm date.

[17] **Trans Type** *(alphanumeric field, 2 positions).* Displays the transaction type. This field is derived from the GLXT.

[18] **BFY** *(numeric field, 2 positions).* Displays the budget fiscal year.

[19] **Fund** *(alphanumeric field, max. of 3 positions).* Displays the fund.

[20] **Budget Org/Sub** *(alphanumeric field, 5 positions).* Displays the budget organization. RD does not use the Budget Sub field.

Line Fields *(cont'd)*

21 **Program** *(alphanumeric field, max. of 9 positions)*. Displays the 9-position ACCS code, which resides in the program field. This field is derived from the ACXT.

22 **BOC/Sub** *(numeric field, 4 positions).* Displays the budget object class. RD does not use the Budget Sub field.

23 **Rptg** *(alphanumeric field, 2 positions).* Displays the 2-position special purpose code, which resides in the reporting category field.

24 **Description** *(alphanumeric field, max. of 30 positions).* Displays the following information: **positions 1–6** represent the requisitioner; **positions 7–10** represent the requisition date; **positions 11–14** represent the requisition serial number; **position 15** is a space; **positions 16–25** represent the *QTY BILLED*; and **positions 26–30** represent the MPOL quantity.

25 **Amount** *(numeric field, max. of 15 positions).* Displays the line amount. This field is derived from the object class amount.

26 **I/D** *(alpha field, 1 position).* Displays the increase (***I***) or decrease (***D***) amount indicator.

27 **P/F** *(alpha field, 1 position).* Displays the partial (***P***) or final (***F***) payment indicator.

28 **Quantity** *(numeric field, max. of 9 positions).* Displays the MPOL quantity.

29 **Outs Ref Amt** *(numeric field, max. of 15 positions).* Displays the outstanding reference amount.

MPOL Suspense Document (VM)

The VM is generated by the GSA Motor Pool System (MPOL) interface to FFIS. The VM is used to record information in FFIS by providing accounting data (i.e., accounting event, accounting classification codes, dollar amount, and object code), as well as, descriptive data elements to support agency and external reports. During the month, the VM posts agency expenditure information and the reversal of the MPOL charge from the NFC suspense fund. Various fields on the VM are system generated with data from the MPOL interface. The GSA State Number is a part of the document ID number. The BOAC number is populated in the Description field in the line record.

The VM is a clone of the baseline Standard Voucher Document (SV). **Figure 4:31** and **Figure 4:32** show the VM header and line screens.

After the VM is processed and accepted in FFIS, the transaction updates the following tables:

- Journal Voucher and Standard Journal Inquiry Table (JVLT)
- Self-Reversing Journal Voucher Inquiry Table (RVJV)
- Budget Execution tables (ALOC, ALLT, SASP)

To access the VM through the Document Suspense File, see **Part 2, Using the Document Suspense File.**

The fields that are populated on the VM through the interface process are listed below:

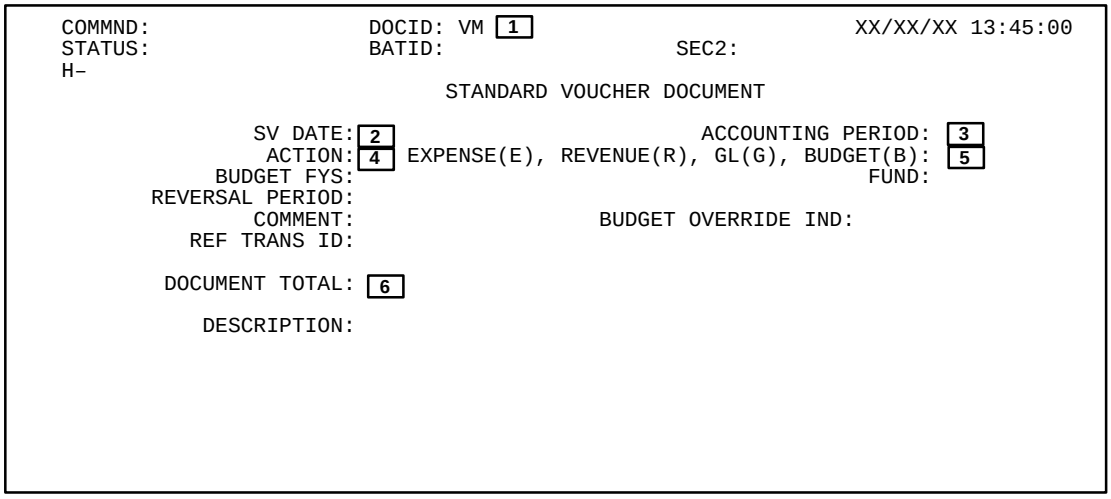

Figure 4:31. MPOL Suspense Document (VM) header fields (Standard Voucher Document)

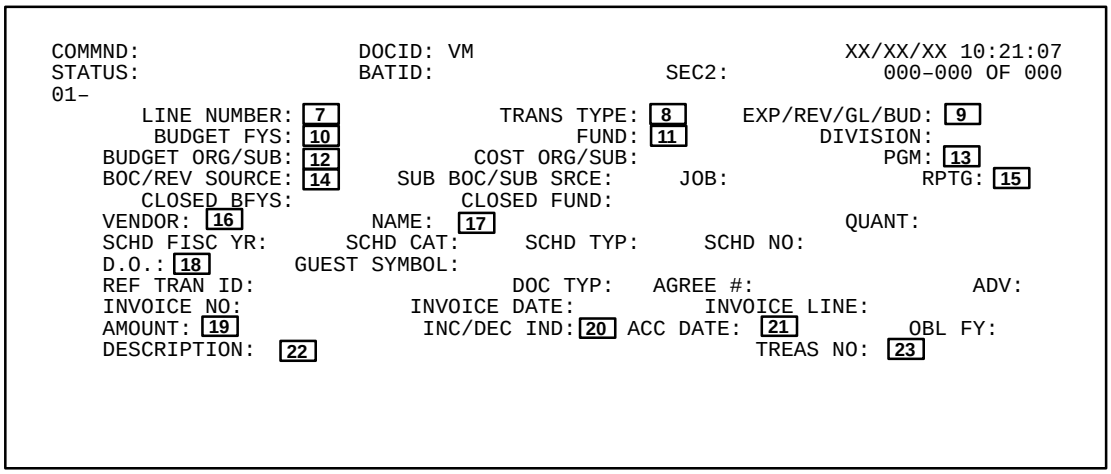

Figure 4:32. MPOL Suspense Document (VM) line fields (Standard Voucher Document)

Command Fields

[1] **DocID** *(alphanumeric field; max. of 15 positions).* Displays the transaction code (***VM***), the sec1 code (i.e., the 2 position division code) and the document number (*max. of 11 positions)*.

Header Fields

[2] **SV Date** (*numeric field, 6 positions).* Displays the date (*mmddyy*) of the document. This field is system generated with data inferred from the date parameter file, if specified, or from the DATE.

[3] **Accounting Period** *(numeric field, 4 positions).* Displays the open accounting period date (*mmyy).* This field is system generated with data inferred from the APCT. Note: The Accounting Period refers to the fiscal month and year, e.g., November 2000 is 02 01.

[4] **Action** *(alpha field, 1 position).* The system generates ***E*** in this field which indicates the document is being added.

[5] **Expense (E), Revenue (R), GL (G), Budget (B)** *(alpha field, 1 position).* Displays the expense, revenue, general ledger, or budget indicator.

[6] **Document Total** *(numeric field, max. of 15 positions).* Displays the document total. This field is system generated and is calculated by the interface program as the unsigned sum of all lines.

Line Fields

[7] **Line Number** *(numeric field, 3 positions).* This field is system generated by the interface program where the first line is assigned ***001***.

[8] **Trans Type** *(alphanumeric field, 2 positions).* Displays the transaction type. This field is derived from the GLXT.

[9] **Exp/Rev/GL/Bud** *(alpha field, 1 position).* Displays the expense, revenue, general ledger, or budget indicator.

[10] **Budget FYs** *(numeric field, 2 positions).* Displays the budget fiscal year.

[11] **Fund** *(alphanumeric field, 2 positions).* Displays the fund.

[12] **Budget Org/Sub** *(numeric field, 5 positions).* Displays the budget organization. RD does not use the Budget Sub field.

[13] **Pgm** *(alphanumeric field, max. of 9 positions).* Displays the 9-position ACCS code, which resides in the program field. This field is derived from the ACXT.

[14] **BOC/Rev Source** *(numeric field, max. of 4 positions).* Displays the budget object code based on the Exp/GL/Rev/Bud indicator. If **Field 9** is ***E*** or ***R***, then this field is mapped to the object class. Otherwise this field is blank.

[15] **Rptg** *(alphanumeric field, 2 positions).* Displays the 2-position special purpose code, which resides in the reporting category field.

[16] **Vendor** *(alphanumeric field, max. of 11 positions).* Displays the vendor code derived from the VCXT.

[17] **Name** *(alphanumeric field, max. of 30 positions).* Displays the following information: **positions 1–6** represent the register schedule number; **position 7** is an *; **positions 8–11** represent the requisition serial number; **position 12** is an*; **positions 13–17** represent the MPOL quantity; and **positions 18–30** represent the MPOL stock number.

[18] **D. O.** *(alphanumeric field, max. of 4 positions).* Displays the disbursing office number with **positions 1–2** representing the DO code**.**

[19] **Amount** *(numeric field, max. of 15 positions).* Displays the line amount. This field is derived from the object class amount.

[20] **Inc/Dec Ind** *(alpha field, 1 position).* Displays the increase (***I***) or decrease (***D***) amount indicator.

[21] **Acc Date** (*numeric field, 6 positions).* Displays the accomplished date (*mmddyy*) derived from the schedule confirmation date.

[22] **Description** *(alphanumeric field, max. of 30 positions).* Displays the following information: **positions 1–6** represent the register schedule number; **position 7** is an *; **positions 8–13** represent the MPOL bill number; **position 14** is an *; and, **position 15** represents the MPOL GSA region.

[23] **Treas No** *(numeric field, max. of 11 positions).* Displays the schedule number.

PRCH Miscellaneous Order Documents (GA, GC, GD)

The GA, GC, and GD are generated by the Purchase Order System (PRCH) interface to FFIS on a nightly basis. The GA, GC, and GD are used to record the accounting and budgetary impacts (obligation) for the order of goods and/or services in FFIS by providing accounting data (i.e., accounting event, accounting classification codes, dollar amount, and object code), as well as descriptive data elements to support agency and external reporting.

The GA is used to record Type 40 purchase orders (goods and/or services that consist of a fixed cost and quantity with anticipated one-time vendor payment); ??the GB is used to record Type 41 purchase orders (subscriptions to newspapers, periodicals, and training costs from vendors); the GC is used to record Type 42 purchase orders (goods and/or services at a fixed price and quantity with anticipated recurring automatic cyclic payments); and the GD is used to record Type 43 purchase orders (goods and/or services with fixed or estimated price and quantity with anticipated one-time or recurring vendor payment).

The PRCH interface generates the GA and GC document for the AD–838, Purchase Order. The PRCH interface generates the GD document for the AD–838, Purchase Order, and the AD–838B, Purchase Order, Invoice Receipt Certification. The GA, GC, or GD is generated to record an obligation and consists of a header and one or more line records. Each document is created and modified, if applicable, to reflect the current obligation. However, the GA is subsequently liquidated by the PRCH Receiver Document (EA). The GA, GC, and GD are clones of the baseline Miscellaneous Order Document (MO). Note: If a trade-in or credit has occurred, the net amount is recorded on a GA, GC, or GD, as appropriate. The gross line amount is recorded in the line description field of the obligation, receipt, and payment voucher.**Figure 4:33** and **Figure 4:34** show the GA, GC, and GD header and line screens.

Note:All PRCH obligations will reject in FFIS requiring referencing of a requisition (RQ) document and line number(s).

After the GA, GC, or GD is processed and accepted in FFIS, the transaction updates the following tables:

- Orders Header Inquiry and Purchase Order Accounting Line Inquiry Tables (OBLH, OBLL)
- Requisition Header Inquiry and Requisition Accounting Line Inquiry Tables (REQH, REQL)
- Budget Execution tables (ALOC, ALLT, SASP)
- General Ledger Balance Inquiry Table (GLBL)
- Generic Interface Document Cross-Reference Table (GIDT)

To access the GA, GC, or GD through the Document Suspense File, see **Part 2,** **Using The Document Suspense File**.

The fields that are populated on the GA, GC, and GD through the interface process are listed below:

```
COMMND: NEW              DOCID:  1                          XX/XX/XX 14:36:52
STATUS:                   BATID:                  SEC2:

                        MISCELLANEOUS ORDER DOCUMENT

     MO DATE: 2                          ACTION: 3      AccTG PD: 4
  VENDOR CODE: 5                    TRANS TYPE: 6      DOC TYPE:
         NAME: 7
      ADDRESS:                                      EFFECTIVE DATE: 8
                                                        END DATE:
                                                   NEG PYMT DAYS: 9
      CONTACT: 10                                  NO OF OPTIONS:
     COMMENTS: 11                             RESP PERSON: 12
    ALT PAYEE:              /                                  BUYER:
    RCVR REQD: 13      INV REQD:          PURCH METHOD:      PRINT PO:
    TEXT TYPE:       CONF ORDER:          INVITATION #: 14
  ASSOC ORDER:                             CONTRACT #: 15
BFYS:           FUND:                   DOCUMENT TOTAL: 16
            REF REQ:                    BLANKET NUMBER:
          DISCOUNT %: 17                          DAYS: 18
          DISCOUNT %:                             DAYS:
          DISCOUNT %:                             DAYS:
```

Figure 4:33. PRCH Miscellaneous Order Documents (GA, GC, GD) header fields (Miscellaneous Order Document)

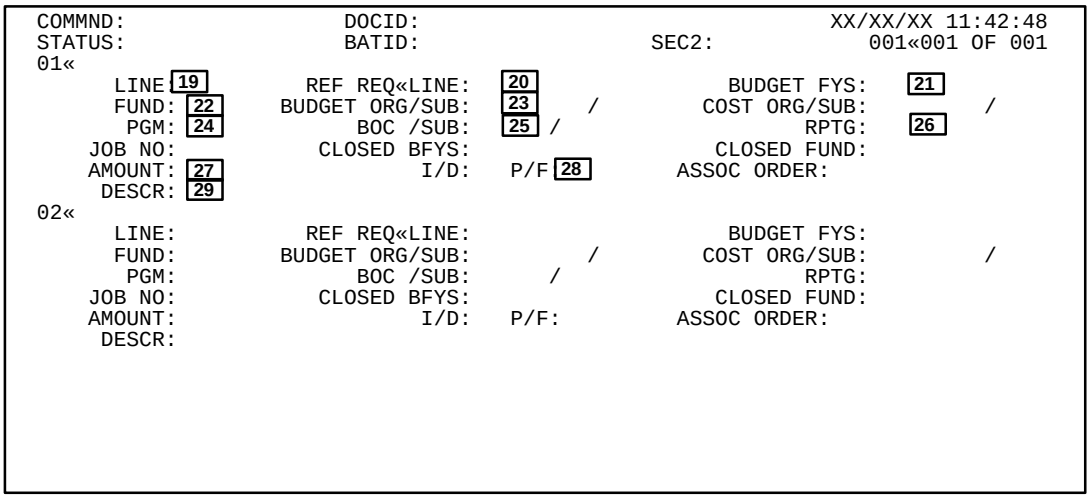

Figure 4:34. PRCH Miscellaneous Order Documents (GA, GC, GD) line fields (Miscellaneous Order Document)

Command Fields

1 **DocID** *(alphanumeric field, max. of 15 positions).* Displays the transaction code (***GA, GC, or GD***), the sec1 code (i.e., the 2 position division code) and the document number (*max. of 11 positions)*. **Position 1** represents the PRCH Order Number; **positions 2–4** represent the 3-digit Julian date; **positions 5–6** represent the 2-digit Agency Number; and **positions 7–9** represent a 3-digit sequential number.

Header Fields

2 **MO Date** (*numeric field, 6 positions).* Displays the date (*mmddyy*) of the document. This field is system generated with data inferred from date parameter file or the DATE.

3 **Action** *(alpha field, 1 position).* The system generates ***E*** in this field which indicates the document is being added.

4 **Acctg Pd** *(numeric field, 4 positions).* Displays the open accounting period date (*mmyy).* This field is system generated with data inferred from the APCT. Note: The Acctg Pd refers to the fiscal month and year, e.g., November 2000 is 02 01.

5 **Vendor Code** *(alphanumeric field, max. of 11 positions).* Displays the vendor code. This field is inferred from the PRXT.

6 **Trans Type** *(alphanumeric field, 2 positions).* Displays the transaction type. This field is derived from the GLXT.

7 **Name, Address 1, 2, 3** *(alphanumeric field, max. of 30 positions per line).* Displays the name and address inferred from the VEND.

8 **Effective Date** *(numeric field, 6 positions)*. The document processor defaults to the effective date.

9 **Negative Payment Days** *(numeric field, 2 positions)*. Displays the negative payment days based on the commodity code.

10 **Contact** *(alpha field, max. of 30 positions)*. Displays the contact inferred from the VEND. If contact is blank in the VEND, then this field is also blank.

11 **Comments** *(alphanumeric field, max. of 12 positions)*. Displays the following information: **positions 1–9** represent the Prch-Batch Number and **positions 10–12** represent the Prch-Sequence Number.

12 **Resp Person** (*alphanumeric field, max. of 15 positions*). Displays the Prch-Purchase Order Number.

13 **Rcvr Reqd** *(alpha field, 1 position)*. Displays the Prch Number Receipt flag. If Purchase Number Receipt flag is ***1***, the Receiver Required is ***Y***. Otherwise, the Receiver Required is ***N***.

14 **Invitation #** *(numeric field, max. of 10 positions)*. Displays **positions 1–10** of the contract number.

15 **Contract #** *(numeric field, max. of 10 positions)*. Displays **positions 11–20** of the contract number.

16 **Document Total** *(numeric field, max. of 15 positions).* Displays the document total. This field is derived from the document line amount.

17 **Discount %** *(numeric field, max. of 5 positions)*. Displays the discount percentage.

18 **Days** *(numeric field, max. of 2 positions)*. Displays the number of discount days.

Line Fields

19 **Line** *(numeric field, 3 positions)*. This field is system generated by the interface program where the first line is assigned ***001***.

20 **Ref Req–Line** (*alphanumeric field, 13 positions*). Displays the reference transaction.

21 **Budget FYs** *(numeric field, 2 positions)*. Displays the budget fiscal year.

22 **Fund** *(alphanumeric field, 3 positions)*. Displays the fund.

23 **Budget Org/Sub** *(alphanumeric field, 5 positions)*. Displays the budget organization. RD does not use the Budget Sub field.

24 **Pgm** *(alphanumeric field, max. of 9 positions)*. Displays the 9-position ACCS code, which resides in the program field. This field is derived from the ACXT.

25 **BOC/Sub** *(numeric field, 4 positions)*. Displays the purchase object class code.

26 **Rptg** *(alphanumeric field, 2 positions)*. Displays the 2-position special purpose code, which resides in the reporting category field.

27 **Amount** *(numeric field, max. of 15 positions).* Displays the line amount.

28 **P/F** *(alpha field, 1 position)*. Displays the partial (***P***) or final (***F***) payment indicator.

29 **Descr** *(alphanumeric field, max. of 30 positions)*. Displays the following information: **positions 1–6** represent the GL-Reg-Schedule Number; **position 7** is an *; **positions 8–12** represent the Prch-Quantity; **position 13** is an *; **positions 14–15** represent the Prch-Line-Item; **position 16** is an *; **positions 17–18** represent the Accounting Line; **position 19** is an *; **position 20** represent the Prch-Trade-In; **position 21** is an *; and **positions 22–30** represent the GL-Total-Amount.

PRCH Type 40 Receiver Document (EA)

The EA is generated by the Purchase Order System (PRCH) interface to FFIS. The EA is used to record the receipt of goods and/or services in FFIS by providing accrual accounting data (i.e., General Ledger accounts, accounting event, accounting classification codes, dollar amount, and object code), as well as descriptive data elements to support agency and external reporting (e.g., purchase order number, quantities, and amounts) for Type 40 Purchase Order receiver documents. The dollar amount of an order document cannot be modified after the document has been referenced by a payment voucher.

The PRCH interface generates the EA document for the AD–838, Purchase Order. The EA is a clone of the baseline Receiver Document.Note: If a trade-in or credit has occurred, the net amount is recorded on a GA. The gross line amount is recorded in the line description field of the obligation, receipt, and payment voucher. **Figure 4:35** and **Figure 4:36** show the EA header and line screens.

After the EA is processed and accepted in FFIS, the transaction updates the following tables:

- Receiver Header Inquiry Table (RCHT)
- Receiver Accounting Line Inquiry Table (RCLA)
- Orders Header Inquiry and Purchase Order Accounting Line Inquiry Tables (OBLH, OBLL)
- Budget Execution tables (ALOC, ALLT, SASP)
- General Ledger Balance Inquiry Table (GLBL)
- Generic Interface Document Cross-Reference Table (GIDT)

To access the EA through the Document Suspense File, see **Part 2,** **Using The Document Suspense File**.

```
COMMND:                DOCID: EA  1                          XX/XX/XX 15:06:53
STATUS:                BATID:                  SEC2:
H«
                                  RECEIVER DOCUMENT

    RECEIPT DATE: 2       ACCOUNTING PERIOD: 3     BFY:        ACTION: 4
    REF ORDER TRANS CODE/NUMBER: 5  /              TRANS TYPE:
    VENDOR CODE: 6                        RECEIVED BY: 7
           NAME:
        ADDRESS: 8



      CARRIER CODE:
      CARRIER NAME:
    CARRIER NUMBER:

    CLEAR ALL:    DOCUMENT TOTAL: 9              COMMENTS:
```

Figure 4:35. PRCH Type 40 Receiver Document (EA) header fields (Receiver Document)

```
COMMND:                DOCID: EA                          XX/XX/XX 15:07:53
STATUS:                BATID:                SEC2:          000«000 OF 008
01«
    ************************  ACCOUNTING LINE DATA  ************************
     LINE NUMBER: 10   REF ACCOUNTING LINE NUMBER: 11   TRANSACTION TYPE: 12
      BUDGET FYS: 13              FUND: 14        BUDGET ORG/SUB: 15      /
         PROGRAM: 16           BOC/SUB: 17   /      COST ORG/SUB:         /
      JOB NUMBER: 18          RPTG CAT: 19
     CLOSED BFYS:          CLOSED FUND:
          AMOUNT: 20             I/D: 21  P/F:22
    OUTS REF AMT: 23            DESC: 24

    ************************  COMMODITY LINE DATA  ************************
    LINE NO:     ORDER LINE:       PRIOR QTY NOT RECEIVED:          P/F:
    COMMODITY CODE:                QUANTITY RECEIVED:               I/D:
      SPECIAL COND:    UNIT:       QUANTITY ACCEPTED:               I/D:
    CATALOG NUMBER:            LOC SEQ:      LOC NUMBER:
       DESCRIPTION:                              SHELF LIFE:
         FA NUMBER:                           FA TYPE:
    BETTERMENT NUMBER:                      TOTAL COST:
```

Figure 4:36. PRCH Type 40 Receiver Document (EA) line fields (Receiver Document)

The fields that are populated on the EA through the interface process are listed below:

Command Fields

[1] **DocID** *(alphanumeric field, max. of 15 positions).* Displays the transaction code (***EA***), the sec1 code (i.e., the 2 position division code) and the document number (*max. of 11 positions)*. To make the referencing of PRCH straightforward, each of the interface-generated documents in the spending chain uses the same document number. Therefore, the document number is the same as the GA with a sequential number suffix. **Position 1** represents the PRCH Order Number; **positions 2–4** represent the 3-digit Julian date; **positions 5–6** represent the 2-digit Agency Number; and **positions 7–9** represent a 3-digit sequential number.

Header Fields

[2] **Receipt Date** (*numeric field, 6 positions).* Displays the Prch-Date-Received (*mmddyy*).

[3] **Accounting Period** *(numeric field, 4 positions).* Displays the open accounting period date (*mmyy).* This field is system generated with data inferred from the APCT. Note: The Acctg Pd refers to the fiscal month and year, e.g., November 2000 is 02 01.

[4] **Action** *(alpha field, 1 position).* If the document is a new entry, this field is blank. If the document is a modification, ***M*** is displayed in this field.

[5] **Ref Order Trans Code/Number** *(alpha field, 2 positions)*. Displays ***GA*** or ***MO***. This field is inferred from the GIDT.

[6] **Vendor Code** *(alphanumeric field, max. of 11 positions).* Displays the vendor code. This field is inferred from the PRXT.

[7] **Received By** *(alphanumeric field, max. of 20 positions).* Displays the following information: **positions 1–12** represent the PRCH-Purchase Order Number; **position 13** is an *; and **positions 14–17** represent the Receiving Office.

[8] **Name, Address 1, 2, 3** *(alphanumeric field, max. of 30 positions per line).* Displays the name and address inferred from the VEND.

[9] **Document Total** *(numeric field, max. of 15 positions).* Displays the document total. This field is derived from the document line amount.

Line Fields

[10] **Line Number** *(numeric field, 3 positions).* This field is system generated by the interface program where the first line is assigned ***001***.

[11] **Ref Accounting Line Number** *(alphanumeric field, 3 positions).* Displays the accounting line number inferred from the GIDT.

[12] **Transaction Type** *(alphanumeric field, 2 positions).* Displays the transaction type inferred from the GLID.

[13] **Budget FYs** *(numeric field, 2 positions)*. Displays the budget fiscal year.

[14] **Fund** *(alphanumeric field, max. of 3 positions)*. Displays the fund.

[15] **Budget Org/Sub** *(alphanumeric field, 5 positions)*. Displays the budget organization code. RD does not use the Budget Sub field.

[16] **Program** *(alphanumeric field, max. of 9 positions)*. Displays the 9-position ACCS code, which resides in the program field. This field is derived from the ACXT.

[17] **BOC/Sub** *(numeric field, 4 positions)*. Displays the purchase object class code.

[18] **Rptg Cat** *(alphanumeric field, 2 positions).* Displays the 2-position special purpose code, which resides in the reporting category field.

[19] **Amount** *(numeric field, max. of 15 positions).* Displays the GL-Total line amount.

[20] **I/D** *(alpha field, 1 position).* Displays the line action. If the document is a modification, displays ***I*** for increase or ***D*** for decrease based on the sign for the total line amount. If document is not a modification, this field is blank.

[21] **P/F** *(alpha field, 1 position)*. Displays ***P*** (Partial).

[22] **Outs Ref Amt** *(numeric field, max. of 15 positions)*. This field is calculated by the document processor.

[23] **Desc** *(alphanumeric field, max. of 30 positions)*. Displays the following information: **positions 1–6** represent the GL-Reg-Schd-Number; **position 7** is an *; **positions 8–12** represent the PRCH-Quantity; **position 13** is an *; **positions 14–15** represent the PRCH-Line-Item; **position 16** is an *; **positions 17–18** represent the Accounting Line; **position 19** is an *; **position 20** is a blank space; **position 21** is an *; and **positions 22–30** are blank spaces.

PRCH OPAC Payable Documents (KA, KD)

The KA and KD are generated by the Purchase Order System (PRCH) interface to FFIS. The KA and KD are used to record OPAC disbursement information for payables to Government entities in FFIS on a daily basis. They also provide accounting data (i.e., General Ledger accounts, accounting event, accounting classification codes, dollar amount, and object code), as well as, descriptive data elements to support agency and external reporting (e.g., PRCH purchase order number and feeder system document ID). The PRCH to FFIS interface records the accounting impact of transactions originating in PRCH which record the procurement of goods and/or services in FFIS and references the corresponding receiver or order document. The dollar amount of a receiver or order document can not be modified after the document has been referenced by a disbursement voucher. Various fields on the KA and KD are system generated with data from the PRCH interface.

The PRCH interface generates the KA for the AD–838, Purchase Order, the AD–838A, Purchase Order, Partial Receipt Notification, and invoices. The KA is used to record disbursement information for payables generated by Type 40 invoices (goods or services that consist of a fixed cost and quantity with anticipated one-time vendor payment).

The PRCH interface generates the KD for the AD–838B, Purchase Order, Invoice Receipt Certification, and invoices. The KD is used to record disbursement information for payables generated by Type 43 invoices (goods or services with fixed or estimated price and quantity with anticipated one-time or recurring vendor payment).

The KA and KD are clones of the baseline Direct Disbursement Document (DD). **Figure 4:37** and **Figure 4:38** show the KA and KD header and line screens.

After the KA or KD is processed and accepted in FFIS, the transaction updates the following tables:

- Generic Interface Document Cross-Reference Table (GIDT)
- Voucher Header Inquiry and Voucher Line Inquiry Tables (PVHT, PVLT)
- Treasury Schedule Control Header and Treasury Schedule Control Line Inquiry Tables (TSCH, TSCL)
- Orders Header Inquiry and Purchase Order Accounting Line Inquiry Tables (OBLH, OBLL)
- Requisition Header Inquiry and Requisition Accounting Line Inquiry Tables (REQH, REQL)
- Budget Execution tables (ALOC, ALLT, SASP)
- General Ledger Balance Inquiry Table (GLBL)

To access the KA and KD through the Document Suspense File, see **Part 2,** **Using The Document Suspense File**.

```
COMMND:                 DOCID: KA  1                        XX/XX/XX 11:43:33
STATUS:                 BATID:                  SEC2:
H«

                          DIRECT DISBURSEMENT DOCUMENT

     DD DATE:  2          ACCTG PD: 3        BUDGET FY:        FUND:
      ACTION:             TRANS TYPE:         COMMENTS:  4
      VENDOR CODE: 5            NAME: 6
    DIRECT DISB #: 7              INTR«AGCY SYMBOL:
      DISB OFFICE: 8                DOCUMENT TOTAL: 9
      AGREEMENT #:                       REF DOC #:
```

Figure 4:37. PRCH OPAC Payable Documents (KA, KD) header fields (Direct Disbursement Document)

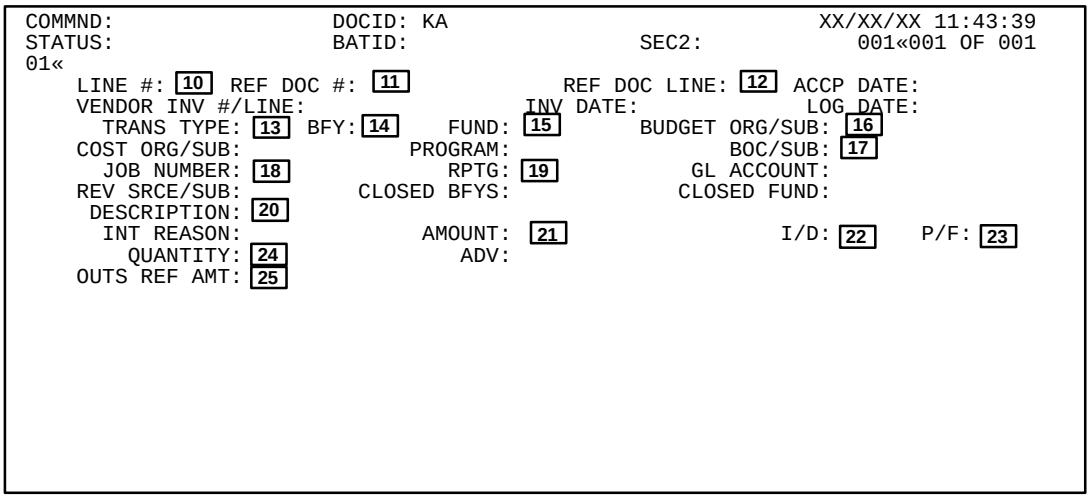

Figure 4:38. PRCH OPAC Payable Documents (KA, KD) line fields (Direct Disbursement Document)

The fields that are populated on the KA and KD through the interface process are listed below:

Command Fields

1 **DocID** *(alphanumeric field, max. of 15 positions).* Displays the transaction code (***KA*** or ***KD***), the sec1 code (i.e., the 2 position division code) and the document number (*max. of 11 positions)*. **Position 1** represents the PRCH Order Number; **positions 2–4** represent the 3-digit Julian date; **positions 5–6** represent the 2-digit Agency Number; and **positions 7–9** represent a 3-digit sequential number.

Header Fields

2 **Vendor Code** *(alphanumeric field, max. of 11 positions).* Displays the vendor code. This field is inferred based on the PRCH-PRCH-Order Number. This information will be inferred from the PRXT and the TPAT.

3 **Comments** *(alphanumeric field, 12 positions)*. Displays the following information: **positions 1–9** represent the PRCH-Batch-Number and **positions 10–12** represent the PRCH-Seq-Number.

4 **DD Date** (*numeric field, 6 positions).* Displays the Schd-Conf-Date (*mmddyy*).

5 **Accounting Period** *(numeric field, 4 positions).* Displays the open accounting period date (*mmyy).* This field is system generated with data inferred from the APCT. Note: The Acctg Pd refers to the fiscal month and year, e.g., November 2000 is 02 01.

6 **Name** *(alpha field, max. of 30 positions)*. Displays the name and address inferred from the VEND.

7 **Direct Disb #** *(numeric field, max. of 11 positions)*. Displays the Schd-Number.

8 **Disb Office** *(alphanumeric field, max. of 4 positions)*. Displays the DO-Code.

9 **Document Total** *(numeric field, max. of 15 positions).* Displays the document total. This field is derived from the document line amount.

Line Fields

10 **Line #** *(numeric field, 3 positions).* Displays the same value as the Ref-Trans-Line.

11 **Ref Doc #** *(alphanumeric field, max. of 13 positions)*. Displays the following information: **positions 1–2** represent ***MO***, ***GA***, ***GD***, or ***EA,*** based on the PRCH-Purchase Order-Number; and the same value as **positions 1–9** of the Trans-Number in **positions 3–11**.

12 **Ref Doc Line** *(alphanumeric field, max. of 3 positions)*. Displays the reference line inferred from the GIDT.

13 **Trans Type** *(alphanumeric field, 2 positions).* Displays the transaction type inferred from the GLXT.

14 **BFY** *(numeric field, 2 positions)*. Displays the budget fiscal year.

15 **Fund** *(alphanumeric field, max. of 3 positions).* Displays the fund.

16 **Budget Org/Sub** *(alphanumeric field, 5 positions)*. Displays the budget organization code. RD does not use the Budget Sub field.

Line Fields *(cont'd)*

[17] **Program** *(alphanumeric field, max. of 9 positions)*. Displays the 9-position ACCS code, which resides in the program field. This field is derived from the ACXT.

[18] **BOC/Sub** *(numeric field, 4 positions)*. Displays the purchase object class code.

[19] **Rptg** *(alphanumeric field, 2 positions)*. Displays the 2-position special purpose code, which resides in the reporting category field.

[20] **Description** *(alphanumeric field, max. of 30 positions)*. Displays the following information: **positions 1–6** represent the GL-Reg-Schd-Number; **position 7** is an *; **positions 8–12** are blank spaces; **position 13** is an *; **positions 14–15** represent the Prch-Line-Item; **position 16** is an *; **positions 17–18** represent the Accounting Line; **position 19** is an *; **position 20** is a blank space; **position 21** is an *; and **positions 22–30** represent the PRCH Purchase Order-Number.

[21] **Amount** *(numeric field, max. of 15 positions)*. Displays the GL-Total amount.

[22] **I/D** *(alpha field, 1 position)*. If the Normal Reversal Code is ***N***, this field is ***I*** (Increase). If the Normal Reversal Code is ***R***, this field is ***D*** (Decrease).

[23] **P/F** *(alpha field, 1 position)*. Displays ***P*** (Partial).

[24] **Quantity** *(numeric field, max. of 9 positions)*. Displays the PRCH-Quantity.

[25] **Outs Ref Amt** *(numeric field, max. of 15 positions)*. This field is calculated by the document processor.

PRCH Standard Voucher Document (SP)

The SP is generated by the Purchase Order System (PRCH) interface to FFIS. The SP is used to reverse the OPAC suspense originally recorded as an OS. The SP is also used to post the gain or loss of assets from a trade-in on a daily basis in FFIS by providing accounting data (i.e., General Ledger accounts, accounting event, accounting classification codes, dollar amount, and object code).

The SP is a clone of the baseline Standard Voucher Document (SV). **Figure 4:39** and **Figure 4:40** show the SP header and line screens.

After the SP is processed and accepted in FFIS, the transaction updates the following tables:

- Treasury Schedule Control Header and Treasury Schedule Control Line Inquiry Tables (TSCH, TSCL)
- Voucher Header Inquiry and Voucher Line Inquiry Tables (PVHT, PVLT)
- Orders Header Inquiry and Purchase Order Accounting Line Inquiry Tables (OBLH, OBLL)
- Budget Execution tables (ALOC, ALLT, SASP)
- General Ledger Balance Inquiry Table (GLBL)
- Document Tracking tables (DCTE, DCTI)
- Journal Voucher and Standard Journal Inquiry Table (JVLT)
- Document Cross Reference Inquiry Table (DXRF)

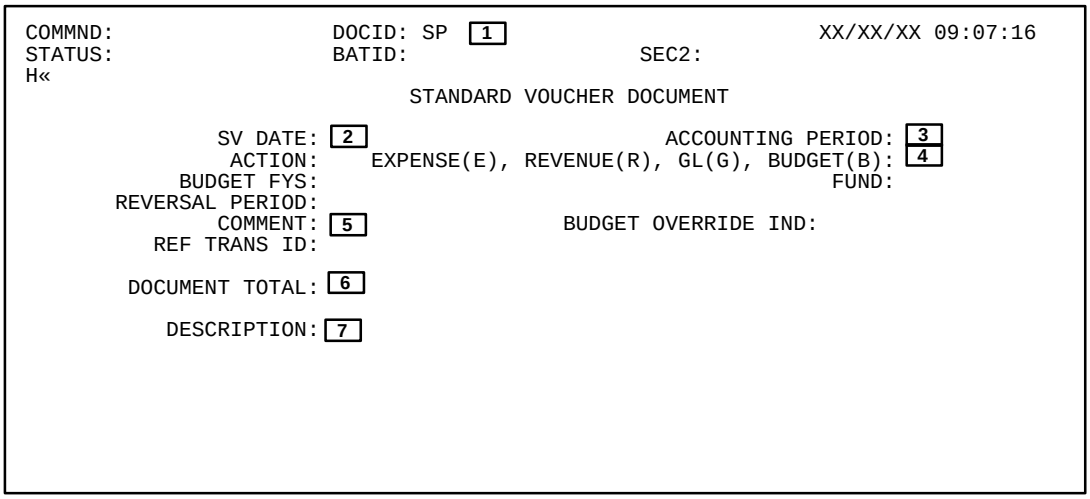

Figure 4:39. PRCH Standard Voucher Document (SP) header fields (Standard Voucher Document)

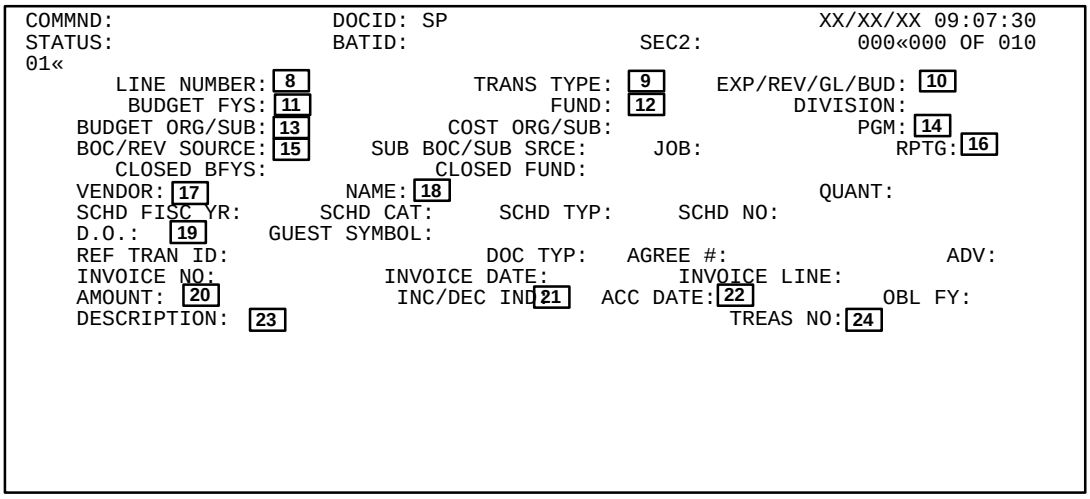

Figure 4:40. PRCH Standard Voucher Document (SP) line fields (Standard Voucher Document)

To access the SP through the Document Suspense File, see **Part 2, Using The Document Suspense File**.

The fields that are populated on the SP through the interface process are listed below:

Command Fields

1 **DocID** *(alphanumeric field, max. of 15 positions).* Displays the transaction code (***SP***), the sec1 code (i.e., the 2 position division code) and the document number (*max. of 11 positions)*. **Position 1** represent the Prch-Order Number; **positions 2–4** represent the Julian date; **positions 5–6** represent the Agency; and **positions 7–9** represent a 3-digit sequential number.

Header Fields

2 **SV Date** (*numeric field, 6 positions).* Displays the transaction date. (*mmddyy*).

3 **Accounting Period** *(numeric field, 4 positions).* Displays the open accounting period date (*mmyy).* This field is system generated with data inferred from the APCT. Note: The Acctg Pd refers to the fiscal month and year, e.g., November 2000 is 02 01.

4 **Expense(E), Revenue(R), GL(G), Budget(B)** *(alpha field, 1 position)*. Displays the code inferred from the GLXT, based on the GL Transaction Code.

5 **Comment** *(alphanumeric field, max. of 12 positions)*. Displays the following information: **positions 1–9** represent the RCH-Batch Number and **positions 10–12** represent the PRCH-Sequence Number.

6 **Document Total** *(numeric field, max. of 15 positions)*. Displays the document total based on the line amount.

7 **Description** *(alphanumeric field, max. of 30 positions)*. Displays the PRCH-Purchase Order Number in **positions 1–12**.

Line Fields

8 **Line #** *(numeric field, 3 positions).* Displays a sequential 3-digit number starting at ***001***.

9 **Trans Type** *(alphanumeric field, 2 positions)*. Displays the transaction type derived from the GLXT.

10 **Exp/Rev/GL/Bud** *(alpha field, 1 position)*. Displays the GL-Trans Code.

11 **Budget FYs** *(numeric field, 2 positions)*. Displays the budget fiscal year.

12 **Fund** *(alphanumeric field, max. of 3 positions)*. Displays the fund.

13 **Budget Org/Sub** *(alphanumeric field, 5 positions)*. Displays the budget organization code. RD does not use the Budget Sub field.

14 **Pgm** *(alphanumeric field, max. of 9 positions)*. Displays the 9-position ACCS code, which resides in the program code field. This field is derived from the ACXT.

15 **BOC/Rev Source** *(numeric field, max. of 4 positions)*. Displays the budget object code based on the Exp/GL/Rev/Bud indicator. If **Field 10** is ***E*** or ***R***, then this field is mapped to the object class. Otherwise, this field is blank.

16 **Rptg** *(alphanumeric field, 2 positions)*. Displays the 2-position special purpose code, which resides in the reporting category field.

17 **Vendor** *(alphanumeric field, max. of 11 positions)*. Displays the vendor identification based on the PRCH-Purchase Order Number. This field is derived from the PRXT.

18 **Name** *(alpha field, max. of 30 positions)*. Displays the vendor name inferred from the VEND.

19 **D.O.** *(numeric field, max. of 4 positions)*. Displays the disbursing office code. This field is only populated for OPAC transactions.

20 **Amount** *(numeric field, max. of 15 positions)*. Displays the sum of the GL Total Amounts.

21 **Inc/Dec Ind** *(alpha field, 1 position).* Displays the code based on the sign of the Line Amount field. If the Line Amount is negative, then this field is ***D*** (Decrease); if the Line Amount is positive, then this field is ***I*** (Increase).

22 **Acc Date** *(numeric field, 6 positions).* Displays the Schd-Conf-Date (*mmddyy*). This field is only populated for OPAC transactions.

23 **Description** *(alphanumeric field, max. of 30 positions)*. Displays the following information: **positions 1–6** represent the GL-Reg-Schd Number; **position 7** is an *; and **positions 8–11** represent the Prch-Object-Class.

24 **Treas No** *(numeric field, max. of 11 positions).* Displays the Treasury Schedule Number.

PRCH Payment Voucher Documents (VA, VC, VD, VE)

The VA, VC, VD, and VE are generated by the Purchase Order System (PRCH) interface to FFIS. These documents are generated based upon receipt of the invoice. The VA, VC, VD, and VE, are used to record payment and disbursement information for payables to vendors and non-government entities in FFIS on a daily basis. They also provide accounting data (i.e., General Ledger accounts, accounting event, accounting classification codes, dollar amount, and object code), as well as descriptive data elements to support agency and external reporting (e.g., PRCH purchase order number and feeder system document ID).

The PRCH to FFIS interface records the accounting impact of transactions originating in PRCH which record the procurement of goods and/or services in FFIS and references the corresponding receiver or order document. The dollar amount of a receiver or order document cannot be modified after the document has been referenced by a payment voucher.

The PRCH interface generates the VA for the AD–838, Purchase Order, the AD–838A, Purchase Order, Partial Receipt Notification, the AD–673, Request to Bill, and invoices. The VA is used to record payable records generated by Type 40 invoices (goods and/or services that consist of a fixed cost and quantity with anticipated one-time vendor payment).

The PRCH interface generates the VB for the AD–838, Purchase Order, Receipt Copy, and invoices. The VB is used to record payable records generated by Type 41 or Type 41P invoices (subscriptions to newspapers, periodicals, and training costs from vendors).

The PRCH interface generates the VC for NFC automatic disbursements. The VC is used to record payable records generated by Type 42 invoices (goods and/or services at a fixed price and quantity with anticipated recurring automatic cyclic payments).

The PRCH interface generates the VD for the AD–838B, Purchase Order, Invoice Receipt Certification, the SF–1080, Voucher for Transfers Between Appropriations and/or Funds, , and invoices. The VD is used to record payable records generated by Type 43 invoices (goods and/or services with fixed or estimated price and quantity with anticipated one-time or recurring vendor payment).

The PRCH interface generates the VE for the AD–838D, Purchase Order, Blanket Purchase Order (BPA)–Invoice–Receipt Certification, and invoices. The VE is used to record payable records generated by Type 45 invoices (establishes a Blanket Purchase Agreement between federal agencies and a vendor).

The VA, VC, VD, and VE are clones of the baseline Payment Voucher Document (PV). Note: If a trade-in or credit has occurred, the net amount is recorded on a GA, GC, or GD, as appropriate. The gross line amount is recorded in the line description field of the obligation, receipt, and payment voucher. **Figure 4:41** and **Figure 4:42** show the VA, VC, VD, and VE header and line screens.

```
COMMND:                  DOCID:    [1]                          XX/XX/XX 08:07:17
STATUS:                  BATID:                  SEC2:
H«
                              PAYMENT VOUCHER DOCUMENT

     PV DATE: [2]          ACCTG PD: [3]      BUDGET FY:         FUND:
      ACTION:            TRANS TYPE:     PROMPT PAY TYPE: [4]  PV TYPE:
    SCHED PYMT DATE: [5]       DESCR: [6]            D.O:        FA IND:
          REF DOC #:                                          ACCP/DEL DATE:
       VENDOR INV #: [7]                  INV DATE: [8]         LOG DATE:
    FY:      SCHEDULE CAT: [9]      SCHEDULE TYP:     SCHEDULE NUMBER:
    VENDOR CODE: [10]                                DOCUMENT TOTAL: [11]
           NAME: [12]                                   AGREEMENT #:
      ADDRESS1:                                       HOLDBACK TOT:
              2:                                     PMT SEQUENCE #:
              3:                                         INT REASON:
     CHECK TYPE:     AGENCY HEAD APPROVAL: [13] DISC LOST REASON:
     DISCOUNT %: [14]              / AMOUNT:              DAYS: [15]
     DISCOUNT %:                   / AMOUNT:              DAYS:
     DISCOUNT %:                   / AMOUNT:              DAYS:
    COMMENTS TO PRINT: [16]
```

Figure 4:41. PRCH Payment Voucher Documents (VA, VC, VD, VE) header fields (Payment Voucher Document)

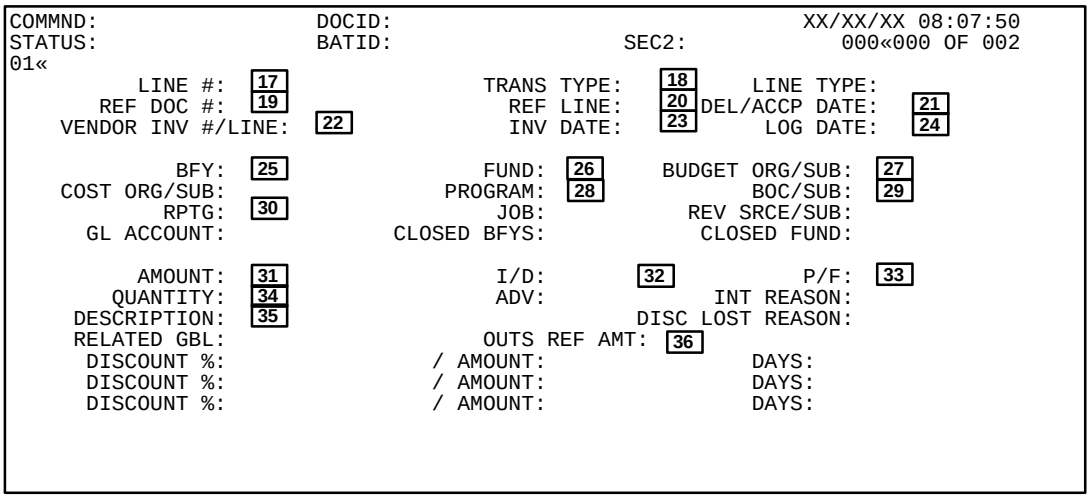

Figure 4:42. PRCH Payment Voucher Documents (VA, VC, VD, VE) line fields (Payment Voucher Document)

After the VA, VC, VD, or VE is processed and accepted in FFIS, the transaction updates the following tables:

- Voucher Header Inquiry and Voucher Line Inquiry Tables (PVHT, PVLT)
- Voucher Tracking Inquiry Table (VCTI)
- Treasury Schedule Control Header and Treasury Schedule Control Line Inquiry Tables (TSCH, TSCL)
- Orders Header Inquiry and Purchase Order Accounting Line Inquiry Tables (OBLH, OBLL)
- Requisition Header Inquiry and Requisition Accounting Line Inquiry Tables (REQH, REQL)
- Budget Execution tables (ALOC, ALLT, SASP)
- General Ledger Balance Inquiry Table (GLBL)
- Generic Interface Document Cross-Reference Table (GIDT)

To access the VA, VC, VD, and VE through the Document Suspense File, see **Part 2, Using The Document Suspense File**.

The fields that are populated on the VA, VC, VD, and VE through the interface process are listed below:

Command Fields

[1] **DocID** *(alphanumeric field, max. of 15 positions).* Displays the transaction code (***VA, VC, VD,***or ***VE***), the sec1 code (i.e., the 2 position division code) and the document number (*max. of 11 positions)*. **Position 1** represent the PRCH Order Number; **positions 2–4** represent the 3-digit Julian date; **positions 5–6** represent the 2-digit Agency Number; and **positions 7–9** represent a 3-digit sequential number.

Header Fields

[2] **PV Date** (*numeric field, 6 positions).* Displays the date (*mmddyy*) of the document. This field is system generated with data inferred from date parameter file or the DATE.

[3] **Acctg Pd** *(numeric field, 4 positions).* Displays the open accounting period date (*mmyy).* This field is system generated with data inferred from the APCT. Note: The Acctg Pd refers to the fiscal month and year, e.g., November 2000 is 02 01.

[4] **Prompt Pay Type** *(alphanumeric field, 1 position)*. Displays the PRCH commodity code.

[5] **Sched Pymt Date** *(numeric field, 6 positions)*. If the payable is recorded for a PRCH Purchase Order Type 41 with a ***P*** sub-identifier, this field is equal to the PV Date. This field is blank for VA, VC, VD, and VE documents.

[6] **Descr** *(alphanumeric field, max. of 12 positions)*. Displays the following information: **positions 1–9** represent the PRCH-Batch Number and **positions 10–12** represent the PRCH-Seq Number.

[7] **Vendor Inv #** *(alphanumeric field, 11 positions)*. Displays the PRCH-Invoice Number.

[8] **Inv Date** *(numeric field, 6 positions)*. Displays the invoice date inferred from the CLDT.

[9] **Schedule Cat** *(alpha field, 1 position)*. Displays ***M*** for RV documents. Otherwise, blank.

Header Fields *(cont'd)*

10 **Vendor Code** *(alphanumeric field, max. of 11 positions).* Displays the vendor code. This field is inferred based on the PRCH-Purchase Order Number. This information will be inferred from the PRXT and the PRCH Third Party Assignment Table (TPAT).

11 **Document Total** *(numeric field, max. of 15 positions).* Displays the document total. This field is derived from the document line amount.

12 **Name, Address 1, 2, 3** *(alphanumeric field, max. of 30 positions per line).* Displays the name and address inferred from the VEND.

13 **Agency Head Approval** *(alpha field, 1 position).* If the Sched Pymt Date (**Field 5**) is populated, then this field is ***Y*** (Yes). Otherwise, this field is blank.

14 **Discount %** *(numeric field, max. of 5 positions).* Displays the discount percentage.

15 **Days** *(numeric field, max. of 2 positions).* Displays the number of discount days.

16 **Comments To Print** *(alphanumeric field, max. of 40 positions).* Displays the following information: **positions 1–12** represent the PRCH-Purchase Order Number; **position 13** is an *; **positions 14–33** represent the PRCH-Inv-Number; **position 34** is an *; **position 35** represents the Enclosure Code 1; **position 36** represents the Enclosure Code 2; **position 37** represents the Enclosure Code 3; and **position 38** represents the Enclosure Code 4.

Line Fields

17 **Line #** *(numeric field, 3 positions).* Displays the same value as the Ref-Trans-Line, if the document references an obligation or accrual. If the document does not reference an obligation or accrual, this number will be generated by the interface program.

18 **Trans Type** *(alphanumeric field, 2 positions).* Displays the transaction type inferred from the GLID.

19 **Ref Doc #** *(alphanumeric field, max. of 13 positions).* Displays the following information: **positions 1–2** represent ***MO***, ***GA***, ***GC***, ***GD***, or ***EA***, based on the GIDT entry; and the same value as **positions 1–9** of the Trans-Number in **positions 3–11**.

20 **Ref Line** *(alphanumeric field, max. of 3 positions).* Displays the reference line inferred from the GIDT.

21 **Del/Accp Date** *(numeric field, 6 positions).* Displays the PRCH-Date-Received. If the Line Action is ***1***, then this field is blank.

22 **Vendor Inv #/Line** *(alphanumeric field, max. of 14 positions).* Displays the PRCH-Invoice Number.

23 **Inv Date** *(numeric field, 6 positions).* Displays the invoice date inferred from the CLDT.

24 **Log Date** *(numeric field, 6 positions).* Displays the Invoice-Log-Date. If the Line Action is ***I***, then this field is blank.

25 **BFY** *(numeric field, 2 positions).* Displays the budget fiscal year.

26 **Fund** *(alphanumeric field, max. of 3 positions).* Displays the fund.

27 **Budget Org/Sub** *(alphanumeric field, 5 positions).* Displays the budget organization code. RD does not use the Budget Sub field.

28 **Program** *(alphanumeric field, max. of 9 positions).* Displays the 9-position ACCS code, which resides int he program field. This field is derived from the ACXT.

29 **BOC/Sub** *(numeric field, 4 positions).* Displays the purchase object class code.

30 **Rptg** *(alphanumeric field, 2 positions).* Displays the 2-position special purpose code, which resides in the reporting category field.

31 **Amount** *(numeric field, max. of 15 positions).* Displays the GL-Total amount.

32 **I/D** *(alpha field, 1 position).* If the Normal Reversal Code is ***N***, this field is ***I***. If the Normal Reversal Code is ***R***, this field is ***D***.

33 **P/F** *(alpha field, 1 position).* Displays blank spaces for all Type 45 transactions. If the FEDSTRIP Final Code is ***2***, ***4***, or ***6***, then ***F*** is displayed.

34 **Quantity** *(numeric field, max. of 9 positions).* Displays the PRCH-Quantity.

35 **Description** *(alphanumeric field, max. of 30 positions).* Displays the following information: **positions 1–6** represent the GL-Reg-Schd-Number; **position 7** is an *; **positions 8–12** represent the Prch-Quantity; **position 13** is an *; **positions 14–15** represent the Prch-Line-Item; **position 16** is an *; **positions 17–18** represent the Accounting Line; **position 19** is an *; **position 20** represents the Prch-Trade-In; **position 21** is an * in; and **positions 22–30** represent the GL-Total-Amount.

36 **Outs Ref Amt** *(numeric field, max. of 15 positions).* This field is calculated by the document processor.

TRAN Transportation Invoice Document (T1)

The T1 is generated by the Transportation System (TRAN) interface to FFIS. The T1 is used to record common carrier expenditures as well as the payments to common carriers.

The TRAN interface creates multi-line T1's for all Government Transportation Requests (GTR's), Government Excess Baggage (GEBA's) and/or Teletickets with unique GTR numbers, employee Social Security Numbers, or Accounting Classifications submitted under one invoice by a single vendor. A single invoice may contain multiple GTR's charging multiple accounting classifications.

The TRAN interface generates the T1 for the SF–1169, U.S. Government Transportation Request. Each T1 consists of a header record and up to 50 lines.

The T1 is a clone of the baseline Transportation Invoice Document. **Figure 4:43** and **Figure 4:44** show the T1 header and line screens.

After the T1 is processed and accepted in FFIS, the transaction updates the following tables:

- Transportation Invoice Header Inquiry and Transportation Invoice Line Inquiry Tables (TNHT, TNLT)
- Voucher Header Inquiry and Voucher Line Inquiry Tables (PVHT, PVLT)
- Budget Execution tables (APPR, APOR, FAPP, FAPR, FALC, FALT, ALOC, ALLT, SASP)
- General Ledger Balance Inquiry Table (GLBL)
- Cross-Reference tables (DXRF, VXRF, GIDT)

To access the T1 through the Document Suspense File, see **Part 2,** **Using The Document Suspense File**.

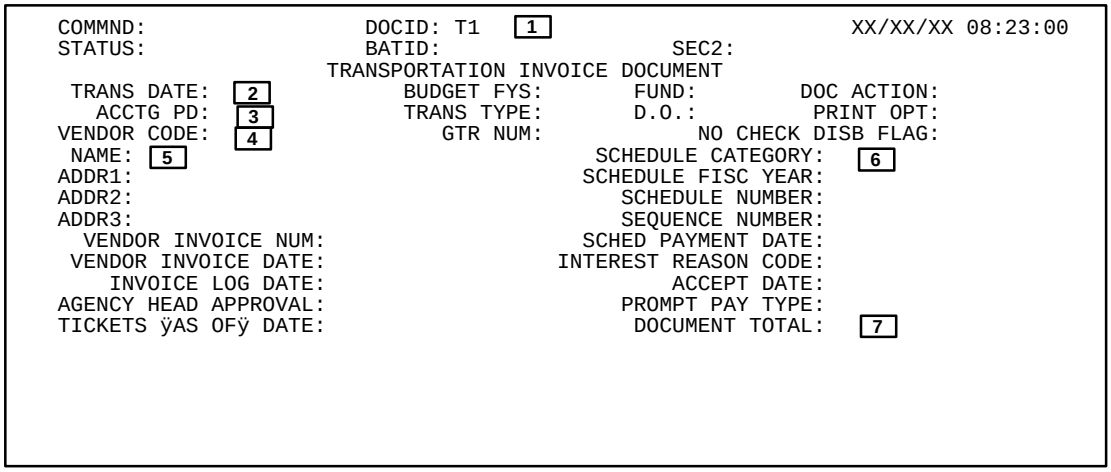

Figure 4:43. TRAN Transportation Invoice Document (T1) header fields (Transportation Invoice Document)

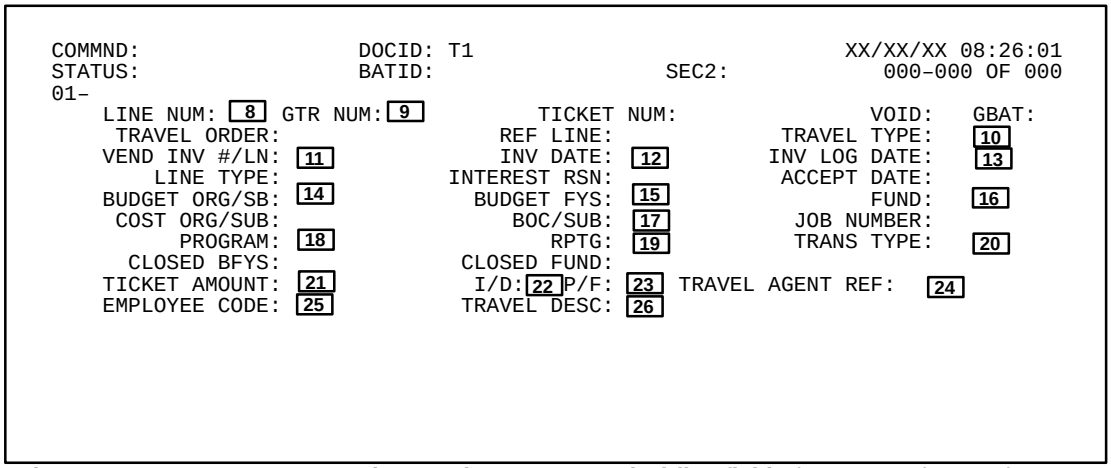

Figure 4:44. TRAN Transportation Invoice Document (T1) line fields (Transportation Invoice Document)

The fields that are populated on the T1 through the interface process are listed below:

Command Fields

1 **DocID** *(alphanumeric field, max. of 15 positions).* Displays the transaction code (***T1***), the sec1 code (i.e., the 2 position division code) and the document number (*max. of 11 positions)*. **Positions 1–6** represent the register schedule number and **positions 7–11** represent a sequential number derived from the ADNT.

Header Fields

2 **Trans Date** (*numeric field, 6 positions).* Displays the date (*mmddyy*) of the document. This field is system generated with data inferred from PMDFTRAN or the DATE.

3 **Acctg Pd** *(numeric field, 4 positions).* Displays the open accounting period date (*mmyy).* This field is system generated with data inferred from the APCT. Note: The Acctg Pd refers to the fiscal month and year, e.g., November 2000 is 02 01.

4 **Vendor Code** *(alphanumeric field, max. of 11 positions).* Displays the vendor code. This field is derived from the VCXT.

5 **Name, Address 1, 2, 3** *(alphanumeric field, max. of 30 positions per line).* The system defaults to the name and address for the specified vendor code.

6 **Schedule Category** *(alpha field, 1 position).* Displays the schedule category. The system generates ***T*** for an automated Treasury schedule, ***M*** for a manual schedule, or, ***A*** for an ACH tape**.**

7 **Document Total** *(numeric field, max. of 15 positions).* Displays the document total. This field is derived from the document obligation amount.

Line Fields

8 **Line Num** *(numeric field, 3 positions).* This field is system generated by the interface program where the first line is assigned ***001***.

9 **GTR Num** *(alphanumeric field, max. of 10 positions).* Displays the Government transportation request number. This field is derived from **positions 7–15** of the GVTS account number.

10 **Travel Type** *(alpha field, 3 positions).* Displays the type of travel. This field is derived from the TTYP.

11 **Vend Inv #/Ln** *(alphanumeric field, max. of 11 positions).* Displays the vendor's invoice number for the goods and/or services related to this document.

12 **Inv Date** *(numeric field, 6 positions).* Displays the vendor date (*mmddyy*) from the vendor's invoice.

13 **Inv Log Date** *(numeric field, 6 positions).* Displays the invoice log date (*mmddyy*).

14 **Budget Org/Sb** *(alphanumeric field, 5 positions).* Displays the budget organization. RD does not use the Budget Sub field.

15 **Budget FYs** *(numeric field, 2 positions).* Displays the budget fiscal year.

16 **Fund** *(alphanumeric field, max. of 3 positions).* Displays the fund.

17 **BOC/Sub** *(numeric field, 4 positions).* Displays the budget object class.

18 **Program** (*alphanumeric field, max. of 9 positions*). Displays the 9-position ACCS code, which resides in the program field. This field is derived from the ACXT.

19 **Rptg** *(alphanumeric field, 2 positions).* Displays the 2-position special purpose code, which resides in the reporting category field.

20 **Trans Type** *(alphanumeric field, 2 positions).* Displays the transaction type. This field is derived from the GLXT.

21 **Ticket Amount** *(numeric field, max. of 12 positions).* Displays the ticket amount. This field is derived from the object class amount.

22 **I/D** *(alpha field, 1 position).* Displays the increase (***I***) or decrease (***D***) amount indicator.

23 **P/F** *(alpha field, 1 position).* Displays the partial (***P***) or final (***F***) payment indicator.

24 **Travel Agent Ref** *(numeric field, max. of 12 positions).* Displays the travel agent identification. This field represents the Travel Management Center (TMC) vendor code.

25 **Employee Code** *(alphanumeric field, 10 positions).* Displays the GVTS traveler's Social Security Number (SSN). **Positions 1–9** represent the employee's SSN and **position 10** is set to ***E***.

26 **Travel Desc** *(alpha field, 1 position).* Displays the travel description code.

TRAN Travel Related Payment Voucher Document (T2)

The T2 is generated by the Transportation System (TRAN) interface to FFIS. The T2 is used to record travel-related third party expenditures and generate payments.

The TRAN interface creates multi-line T2's for all Government Bill of Lading (GBL's) and Commercial Bill of Lading (CBL's) with unique GBL/CBL numbers, employee Social Security Numbers, or Accounting Classifications submitted under one invoice by a single vendor. A single invoice may contain multiple GBL/CBL's charging multiple accounting classifications.

The TRAN interface generates the T2 for the SF–1103, U.S. Government Bill of Lading, SF–1109, U.S. Government Bill of Lading Continuation Sheet, SF–1169, U.S. Government Transportation Request, SF–1200, Government Bill of Lading Correction Notice, and the SF–1203, U.S. Government Bill of Lading–Privately Owned Personal Property (PPGBL). Each T2 consists of a header record and up to 50 lines.

The T2 is a clone of the baseline Travel Related Payment Voucher Document (TP). **Figure 4:45** and **Figure 4:46** show the T2 header and line screens.

After the T2 is processed and accepted in FFIS, the transaction updates the following tables:

- Travel-Related Voucher Line Inquiry Table (TPLT)
- Voucher Header Inquiry and Voucher Line Inquiry Tables (PVHT, PVLT)
- Budget Execution tables (APPR, APOR, FAPP, FAPR, FALC, FALT, ALOC, ALLT, SASP)
- General Ledger Balance Inquiry Table (GLBL)
- Cross-Reference tables (DXRF, SPDX, VXRF, GIDT)

```
COMMND:                DOCID: T2 [1]                          XX/XX/XX 07:45:07
STATUS:                BATID:                  SEC2:
H–
                                  TRAVEL RELATED
                               PAYMENT VOUCHER DOCUMENT
     TP DATE: [2]          ACCTG PD: [3]    BUDGET FYS:          FUND:
         ACTION:         TRANS TYPE:          TP TYPE:      PROMPT PAY TYPE:
    SCHED PYMT DATE:          DESCR: [4]          D.O:       INV DATE:
     REF DOC ID:                 VENDOR INV #: [6]           LOG DATE:
    VENDOR CODE: [5]          DOC TOTAL:                    ACCP DATE:
      SCHD FISC YR:     SCHD CAT:[7]  SCHD TYPE: [8]      SCHD NUMBER:
           NAME: [9]                                    PMT SEQUENCE #:
      ADDRESS1:                                      NO CHECK DISB FLAG:
              2:                                              CHECK TYPE:
              3:
    AGENCY HEAD APPROVAL:                 DISCOUNT LOST REASON CODE:
     DISCOUNT %:          DISCOUNT AMOUNT:              DISCOUNT DAYS:
     DISCOUNT %:          DISCOUNT AMOUNT:              DISCOUNT DAYS:
     DISCOUNT %:          DISCOUNT AMOUNT:              DISCOUNT DAYS:
    COMMENTS TO PRINT: [10]
```

Figure 4:45. TRAN Travel Related Payment Voucher Document (T2) header fields (Travel Related Payment Voucher Document)

```
COMMND:                DOCID: T2                              XX/XX/XX 07:49:41
STATUS:                BATID:                  SEC2:             000–000 OF 000
01–
    LINE #: [11]  REF DOC #:                REF DOC LINE:     ACCP DATE:
    VENDOR INV #/LINE:                   INV DATE:            LOG DATE: [12]
    TRANS TYPE[13]     BFYS:[14]     FUND:[15]       BUDGET ORG/SUB: [16]
    COST ORG/SUB:                PROGRAM:[17]              BOC/SUB: [18]
    JOB NUMBER  :                  RPTG:[19]           GL ACCOUNT:
    REV SRCE/SUB:          CLOSED BFYS:                CLOSED FUND:
       LINE TYPE:          DESCRIPTION: [20]
    QUANTITY    :               AMOUNT: [21]                 I/D: [22]  P/F: [23]
    INT REASON  :     DISC LOST RSN CODE:           RELATED GBL: [24]
    EMPLOYEE ID : [25]          TAX CODE: [26]   TRAVEL ORDER #:
      DISCOUNT %:        DISCOUNT AMOUNT:              DISCOUNT DAYS:
      DISCOUNT %:        DISCOUNT AMOUNT:              DISCOUNT DAYS:
      DISCOUNT %:        DISCOUNT AMOUNT:              DISCOUNT DAYS:
```

Figure 4:46. TRAN Travel Related Payment Voucher Document (T2) line fields (Travel Related Payment Voucher Document)

To access the T2 through the Document Suspense File, see **Part 2, Using The Document Suspense File**.

The fields that are populated on the T2 through the interface process are listed below:

Command Fields

[1] **DocID** *(alphanumeric field, max. of 15 positions).* Displays the transaction code (***T2***), the sec1 code (i.e., the 2 position division code) and the document number (*max. of 11 positions)*. **Positions 1–6 represent** the register schedule number and **positions 7–11** represent a sequential number derived from the ADNT.

Header Fields

[2] **TP Date** (*numeric field, 6 positions).* Displays the date (*mmddyy*) of the Travel Related Payment Voucher. This field is system generated with data inferred from PMDFTRAN or the DATE.

[3] **Acctg Pd** *(numeric field, 4 positions).* Displays the open accounting period date (*mmyy).* This field is system generated with data inferred from the APCT. Note: The Acctg Pd refers to the fiscal month and year, e.g., November 2000 is 02 01.

[4] **Descr** *(alphanumeric field, max. of 12 positions).* Displays the authorization number minus the first position.

[5] **Vendor Code** *(alphanumeric field, max. of 11 positions).* Displays the vendor code. This field is derived from the VCXT

[6] **Doc Total** *(numeric field, max. of 15 positions).* Displays the unsigned net total of all accounting lines.

[7] **Schd Cat** *(alpha field, 1 position).* Displays the schedule category. The system generates ***T*** for an automated Treasury schedule, ***M*** for a manual schedule, or, ***A*** for an ACH tape**.**

[8] **Schd Typ** *(alpha field, 1 position).* Displays the schedule category. The system generates ***T*** for transportation schedule.

[9] **Name, Address 1, 2, 3** *(alphanumeric field, max. of 30 positions per line).* The system defaults to the name and address for the specified vendor code.

[10] **Comments To Print** *(alphanumeric field, max. of 40 positions).* Displays the invoice number.

Line Fields

[11] **Line Num** *(numeric field, 3 positions).* This field is system generated by the interface program where the first line is assigned ***001***.

[12] **Inv Log Date** *(numeric field, 6 positions).* Displays the invoice log date (*mmddyy*).

[13] **Trans Type** *(alphanumeric field, 2 positions).* Displays the transaction type. This field is derived from the GLXT.

[14] **BFYs** *(numeric field, 2 positions).* Displays the budget fiscal year.

[15] **Fund** *(alphanumeric field, max. of 3 positions).* Displays the fund.

[16] **Budget Org/Sub** *(alphanumeric field, 5 positions).* Displays the budget organization. RD does not use the Budget Sub field.

[17] **Program** *(alphanumeric field, max. of 9 positions).* Displays the 9-position ACCS code, which resides in the program field. This field is derived from the ACXT.

[18] **BOC/Sub** *(numeric field, 4 positions).* Displays the budget object class.

[19] **Rptg** *(alphanumeric field, 2 positions).* Displays the 2-position special purpose code, which resides in the reporting category field.

[20] **Description** *(alphanumeric field, max. of 30 positions).* Displays the invoice number.

[21] **Amount** *(numeric field, max. of 15 positions).* Displays the line amount.

[22] **I/D** *(alpha field, 1 position).* Displays the increase (***I***) or decrease (***D***) amount indicator.

[23] **P/F** *(alpha field, 1 position).* Displays the partial (***P***) or final (***F***) payment indicator.

[24] **Related GBL** *(alphanumeric field, max. of 11 positions).* Displays the related GBL.

[25] **Employee ID** *(alphanumeric field, 10 positions).* Displays the traveler's Social Security Number (SSN). **Positions 1–9** represent the employee's SSN and **position 10** is set to ***E***.

[26] **Tax Code** *(alpha field, 1 position).* Displays the tax code from the Tax Code Reference Table (TAXT). The default value is ***T*** for Tran Third Party Non Taxable.

GVTS Payment Voucher Document (G1)

The G1 is generated by the Government Transportation System (GVTS) interface to FFIS. The G1 is used to pay a third party vendor for ticket purchases used for Government travel. It also provides accounting data (i.e., accounting events, accounting classification codes, dollar amounts, and object codes), and descriptive data elements to support agency and external reports.

The GVTS interface generates the G1 for electronic invoices. Each G1 consists of a header record and one or more line records which represent the entire amount of the agency's portion of the third party vendor invoice charged to the clearing account. The interface creates a new G1 for every change of either the invoice number or the supplemental invoice number.

The G1 is a clone of the baseline PV. **Figure 4:47** and **Figure 4:48** show the G1 header and line screens.

After the G1 is processed and accepted in FFIS, the transaction updates the following tables:

- Voucher Header Inquiry and Voucher Line Inquiry Tables (PVHT, PVLT)
- Generic Schedule Control Header Inquiry Table (GSCH)
- Treasury Schedule Control Header and Treasury Schedule Control Line Inquiry Tables (TSCH, TSCL). These tables are updated only if manual schedule numbers are used.
- Orders Header Inquiry and Purchase Order Accounting Line Inquiry Tables (OBLH, OBLL)

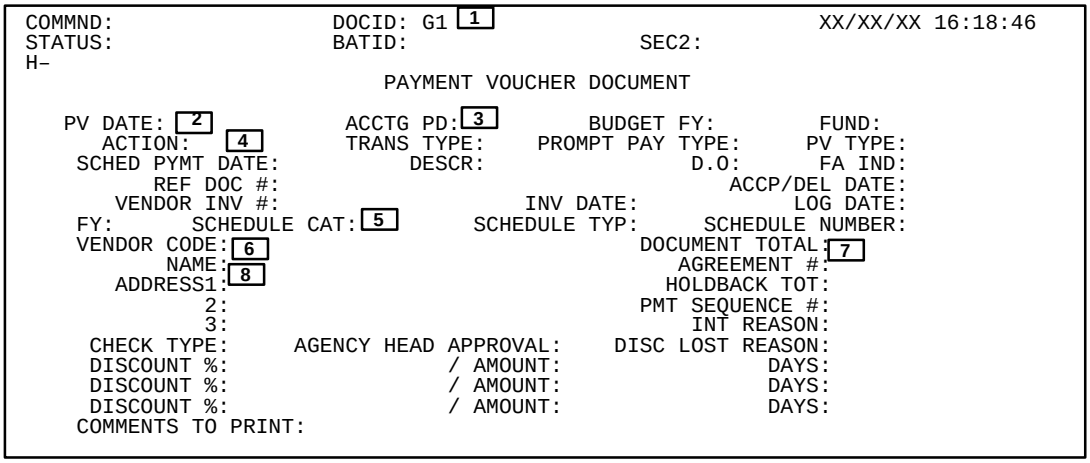

Figure 4:47. GVTS Payment Voucher Document (G1) header fields (Payment Voucher Document)

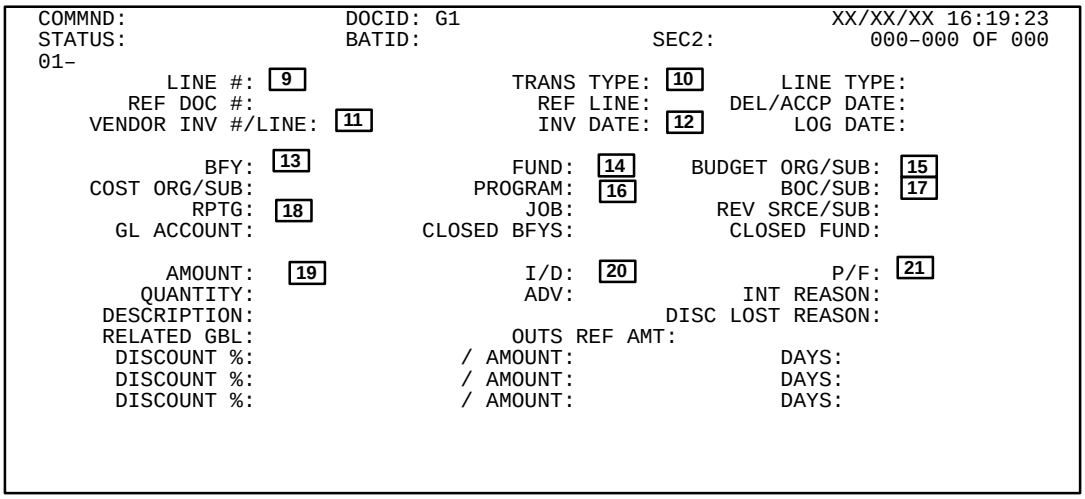

Figure 4:48. GVTS Payment Voucher Document (G1) line fields (Payment Voucher Document)

- Budget Execution tables (APPR, APOR, FAPP, FAPR, FALC, FALT, ALOC, ALLT, SASP). The FALC and FALT are updated by the offline program, XXXBEFY.
- General Ledger Balance Inquiry Table (GLBL)
- Cross-Reference tables (DXRF, VXRF)

To access the G1 through the Document Suspense File, see **Part 2, Using The Document Suspense File**.

The fields that are populated on the G1 through the interface process are listed below:

Command Fields

[1] **DocID** *(alphanumeric field, max. of 15 positions).* Displays the transaction code (***G1***), the sec1 code (i.e., the 2 position division code) and the document number (*max. of 11 positions)*. The document number is as follows: **Positions 1–8** represent positions 5–12 of the GVTS invoice number; **position 9** is an asterisk (*); and, **positions 10–11** represent the GVTS Supplier Invoice Number.

Header Fields

[2] **PV Date** (*numeric field, 6 positions).* Displays the date (*mmddyy*) of the document. This field is system generated with data inferred from PMDFGVTS or the DATE.

[3] **Acctg Pd** *(numeric field, 4 positions).* Displays the open accounting period date (*mmyy).* the job code. This field is system generated with data inferred from APCT Note: The Acctg Pd refers to the fiscal month and year, e.g., November 2000 is 02 01.

[4] **Action** *(alpha field, 1 position).* The system generates ***E*** in this field which indicates the document is being added.

[5] **Schedule Cat** *(alpha field, 1 position).* Displays the schedule category. The system generates ***A*** in this field for ACH tape**.**

[6] **Vendor Code** *(alphanumeric field, max. of 11 positions).* Displays the vendor code. This field is derived from the VCXT.

[7] **Document Total** *(numeric field, max. of 15 positions).* Displays the document total. This field is derived from the document obligation amount.

[8] **Name, Address 1, 2, 3** *(alphanumeric field, max. of 30 positions per line).* The system defaults to the name and address for the specified vendor.

Line Fields

[9] **Line #** *(numeric field, 3 positions).* This field is system generated by the interface program where the first line is assigned ***001***.

[10] **Trans Type** *(alphanumeric field, 2 positions).* Displays the transaction type. This field is derived from the GLXT.

[11] **Vendor Inv #/Line** *(alphanumeric field, 10 positions).* Displays the vendor's invoice number for the goods and/or services related to this document. **Positions 1–8** represent positions 5–12 of the GVTS invoice number and **positions 9–10** represent the supplemental invoice number.

[12] **Inv Date** *(numeric field, 6 positions).* Displays the vendor date (*mmddyy*) from the vendor's invoice.

[13] **BFY** *(numeric field, 2 positions).* Displays the budget fiscal year. This field is derived from the PMSFGVTS.

[14] **Fund** *(numeric field, max. of 3 positions).* Displays the fund. This field is derived from the PMSFGVTS.

[15] **Budget Org/Sub** *(alphanumeric field, 5 positions).* Displays the budget organization. RD does not use the Budget Sub field.

[16] **Program** *(alphanumeric field, max. of 9 positions).* Displays the 9-position ACCS code, which resides in the program field. This field is derived from the ACXT.

[17] **BOC/Sub** *(numeric field, 4 positions).* Displays the budget object class.

[18] **Rptg** *(alphanumeric field, 2 positions).* Displays the 2-position special purpose code, which resides in the reporting category field.

[19] **Amount** *(numeric field, max. of 15 positions).* Displays the line amount. This field is derived from the obligation amount.

[20] **I/D** *(alpha field, 1 position).* Displays the increase (***I***) or decrease (***D***) amount indicator.

[21] **P/F** *(alpha field, 1 position).* Displays the partial (***P***) or final (***F***) payment indicator.

GVTS Transportation Invoice Document (G2)

The G2 is generated by the Government Transportation System (GVTS) interface to FFIS. The G2 is used to record travel-related data concerning ticket purchases made in FFIS. It also provides accounting data (i.e., accounting events, accounting classification codes, dollar amounts, and object codes), and descriptive data elements to support agency and external reports.

The GVTS interface generates the G2 for electronic invoices. Each G2 consists of a header record and up to 50 lines. The interface creates a new G2 for every record.

The G2 is a clone of the baseline Transportation Invoice Document (TN). **Figure 4:49** and **Figure 4:50** show the G2 header and line screens.

After the G2 is processed and accepted in FFIS, the transaction updates the following tables:

- Journal Voucher and Standard Journal Inquiry Table (JVLT)
- Generic Schedule Control Line Inquiry Table (GSCL)
- Voucher Header Inquiry Table (PVHT)
- Voucher Line Inquiry Table (PVLT)
- Transportation Invoice Header Inquiry Table (TNHT)
- Transportation Invoice Line Inquiry Table (TNLT)
- Budget Execution tables (APPR, APOR, FAPP, FAPR, FALC, FALT, ALOC, ALLT, SASP)
- Cross-Reference tables (DXRF, VXRF, GIDT)

To access the G2 through the Document Suspense File, see **Part 2,** **Using The Document Suspense File**.

```
COMMND:                  DOCID: G2  1                          XX/XX/XX 08:01:55
STATUS:                  BATID:                    SEC2:

                      TRANSPORTATION INVOICE DOCUMENT

TRANS DATE: 2            BUDGET FYS:       FUND:        DOC ACTION:   3
    ACCTG PD:  4           TRANS TYPE:       D.O.:          PRINT OPT:
 VENDOR CODE:   5             GTR NUM:              NO CHECK DISB FLAG:    6
  NAME:  7                                  SCHEDULE CATEGORY:
 ADDR1:                                    SCHEDULE FISC YEAR:
 ADDR2:                                       SCHEDULE NUMBER:
 ADDR3:                                       SEQUENCE NUMBER:
   VENDOR INVOICE NUM:                     SCHED PAYMENT DATE:
  VENDOR INVOICE DATE:                   INTEREST REASON CODE:
     INVOICE LOG DATE:                           ACCEPT DATE:
 AGENCY HEAD APPROVAL:                       PROMPT PAY TYPE:
 TICKETS ÿAS OFÿ DATE:  8                     DOCUMENT TOTAL:    9
```

Figure 4:49. GVTS Transportation Invoice Document (G2) header fields (Transportation Invoice Document)

```
COMMND:                  DOCID: G2                             XX/XX/XX 08:06:09
STATUS:                  BATID:                    SEC2:          000-000 OF 000
01-
    LINE NUM: 10  GTR NUM: 11        TICKET NUM: 12                VOID:   GBAT:
     TRAVEL ORDER:                 REF LINE:                 TRAVEL TYPE:  13
    VEND INV #/LN: 14              INV DATE: 15             INV LOG DATE:
        LINE TYPE:              INTEREST RSN:               ACCEPT DATE:
    BUDGET ORG/SB: 16            BUDGET FYS: 17                     FUND:  18
     COST ORG/SUB:                   BOC/SUB: 19             JOB NUMBER:
          PROGRAM: 20                   RPTG: 21             TRANS TYPE:  22
      CLOSED BFYS:               CLOSED FUND:
    TICKET AMOUNT: 23             I/D:   P/F: 24  TRAVEL AGENT REF:  25
    EMPLOYEE CODE: 26            TRAVEL DESC: 27
```

Figure 4:50. GVTS Transportation Invoice Document (G2) line fields (Transportation Invoice Document)

The fields that are populated on the G2 through the interface process are listed below:

Command Fields

1 **DocID** *(alphanumeric field, max. of 15 positions).* Displays the transaction code (***G2***), the sec1 code (i.e., the 2 position division code) and the document number (*max. of 11 positions)*. The document number is as follows: **positions 1–4** represent positions 5–8 of the invoice number; **positions 5–7** represent positions 10–12 of the invoice number; **position 8** is an * or an A–Z (if a supplemental invoice); and **positions 9–11** represent a sequential number derived from the ADNT.

Header Fields

2 **Trans Date** (*numeric field, 6 positions).* Displays the date (*mmddyy*) of the document. This field is system generated with data inferred from PMDFGVTS or the DATE.

3 **Doc Action** *(alpha field, 1 position).* The system generates ***E*** in this field which indicates the document is being added.

4 **Acctg Pd** *(numeric field, 4 positions).* Displays the open accounting period date (*mmyy).* This field is system generated with data inferred from the APCT. Note: The Acctg Pd refers to the fiscal month and year, e.g., November 2000 is 02 01.

5 **Vendor Code** *(alphanumeric field, max. of 11 positions).* Displays the vendor code. This field is derived from the VCXT.

6 **No Check Disb Flag** *(alpha field, 1 position).* This field is always set to ***Y*** for the G2.

7 **Name, Address 1, 2, 3** *(alphanumeric field, max. of 30 positions per line).* The system defaults to the name and address for the specified vendor as referenced on the line screen.

8 **Ticket As Of Date** (*numeric field, 6 positions).* Displays the issue date (*mmddyy*) derived from the GVTS date ticket issued.

9 **Document Total** *(numeric field, max. of 15 positions).* Displays the document total. This field is derived from the document obligation amount.

Line Fields

10 **Line Num** *(numeric field, 3 positions).* This field is system generated by the interface program where the first line is assigned ***001***.

11 **GTR Num** *(numeric field, 9 positions).* Displays the GVTS account number related to the document. This field is derived from positions 7–15 of the GVTS account number.

12 **Ticket Num** *(numeric field, 12 positions).* Displays the GVTS ticket number. This field is derived from the last 12 characters of the GVTS ticket number.

13 **Travel Type** *(alpha field, 3 positions).* Displays the GVTS type of travel. If the GVTS type of travel is set to ***1***, ***TDU*** is system generated in this field. Any other GVTS type of travel setting other than 1, generates ***REU***.

14 **Vend Inv #/Ln** *(numeric field, 10 positions).* Displays the vendor's invoice number for the goods and/or services related to this document. **Positions 1–8** represent positions 5–12 of the invoice number and **positions 9–10** represent the supplemental invoice number.

15 **Inv Date** *(numeric field, 6 positions).* Displays the vendor date (*mmddyy*) from the vendor's invoice.

16 **Budget Org/Sb** *(alphanumeric field, 5 positions).* Displays the budget organization. RD does not use the Budget Sub field.

17 **Budget FYs** *(numeric field, max. of 2 positions).* Displays the budget fiscal year.

18 **Fund** *(numeric field, max. of 3 positions).* Displays the fund.

19 **BOC/Sub** *(numeric field, 4 positions).* Displays the budget object class.

20 **Program** *(alphanumeric field, max. of 9 positions).* Displays the 9-position ACCS code, which resides in the program field. this field is derived from the ACXT.

21 **Rptg** *(alphanumeric field, 2 positions).* Displays the 2-position special purpose code, which resides in the reporting category field.

22 **Trans Type** *(alphanumeric field, 2 positions).* Displays the transaction type. This field is derived from the GLXT.

23 **Ticket Amount** *(numeric field, max. of 12 positions).* Displays the ticket amount. This field is derived from the object class amount.

Line Fields *(cont'd)*

24 **P/F** *(alpha field, 1 position).* Displays the partial (***P***) or final (***F***) payment indicator.

25 **Travel Agent Ref** *(numeric field, max. of 12 positions).* Displays the GVTS travel agent identification. This field represents the Travel Management Center (TMC) vendor code.

26 **Employee Code** *(numeric field, 10 positions).* Displays the GVTS traveler's Social Security Number (SSN). **Positions 1–9** represent the employee's SSN and **position 10** is set to ***E***.

27 **Travel Desc** *(alpha field, 1 position).* Displays the travel description code.

GVTS Standard Voucher Document (G3)

The G3 is generated by the Government Transportation System (GVTS) interface to FFIS. The G3 is used to reverse an agency's portion of the third party vendor invoice charged to the agency's clearing account. It also provides accounting data (i.e., accounting events, accounting classification codes, dollar amounts, and object codes), and descriptive data elements to support agency and external reports.

Each G3 consists of a header record and one or more line records. The G3 is a clone of the baseline Standard Voucher Document (SV). **Figure 4:51** and **Figure 4:52** show the G3 header and line screens.

After the G3 is processed and accepted in FFIS, the transaction updates the following tables:

- Transportation Invoice Header Inquiry Table (TNHT)
- Transportation Invoice Line Inquiry Table (TNLT)
- Journal Voucher and Standard Journal Inquiry Table (JVLT)
- Voucher Header Inquiry and Voucher Line Inquiry Tables (PVHT, PVLT)

To access the G3 through the Document Suspense File, see **Part 2, Using The Document Suspense File**.

The fields that are populated on the G3 through the interface process are listed below:

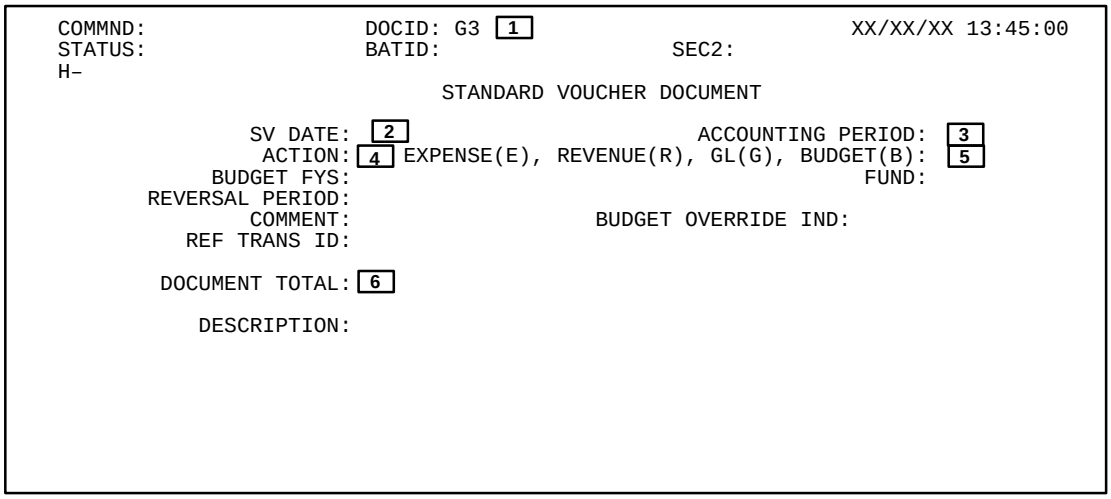

Figure 4:51. GVTS Standard Voucher Document (G3) header fields (Standard Voucher Document)

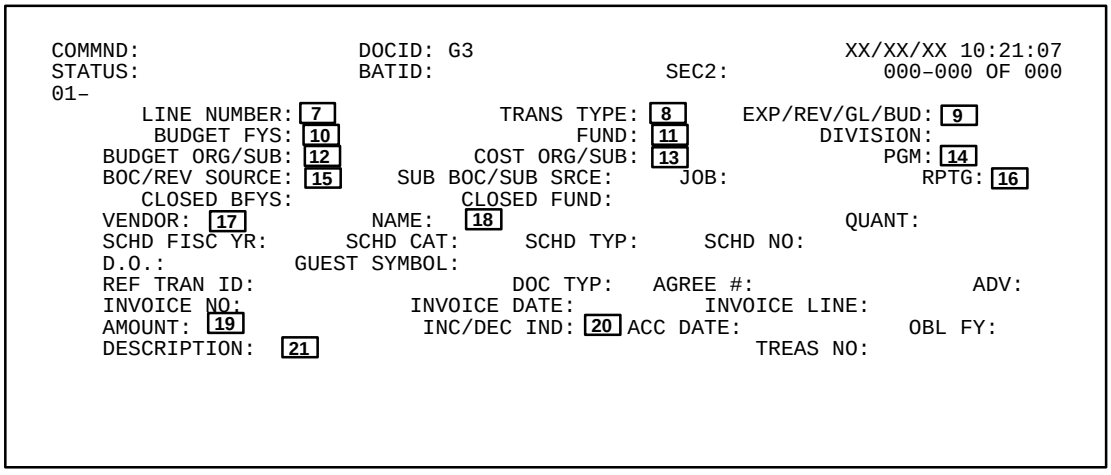

Figure 4:52. GVTS Standard Voucher Document (G3) line fields (Standard Voucher Document)

Command Fields

[1] **DocID** *(alphanumeric field, max. of 15 positions).* Displays the transaction code (***G2***), the sec1 code (i.e., the 2 position division code) and the document number (*max. of 11 positions)*. The document number is as follows: **positions 1–4** represent positions 5–8 of the invoice number; **positions 5–7** represent positions 10–12 of the invoice number; **position 8** is an * or an A–Z (if a supplemental invoice); and, **positions 9–11** represent a sequential number derived from the ADNT.

Header Fields

[2] **SV Date** (*numeric field, 6 positions).* Displays the date (*mmddyy*) of the document. This field is system generated with data inferred from PMDFGVTS or the DATE.

[3] **Accounting Period** *(numeric field, 4 positions).* Displays the open accounting period date (*mmyy).* This field is system generated with data inferred from the APCT. Note: The Accounting Period Refers to the fiscal month and year, e.g., November 2000 is 02 01.

[4] **Action** *(alpha field, 1 position).* The system generates ***E*** in this field which indicates the document is being added.

[5] **Expense (E), Revenue (R), GL (G), Budget (B)** *(alpha field, 1 position).* Displays the expense, revenue, general ledger, or budget indictor. This field is system generated with data inferred from the GLXT.

[6] **Document Total** *(numeric field, max. of 15 positions).* Displays the document total. This field is system generated and is calculated by the interface program as the unsigned sum of all lines.

Line Fields

[7] **Line Num** *(numeric field, 3 positions).* This field is system generated by the interface program where the first line is assigned ***001***.

[8] **Trans Type** *(alphanumeric field, 2 positions).* Displays the transaction type. This field is derived from the GLXT.

[9] **Expense (E), Revenue (R), GL (G), Budget (B)** *(alpha field, 1 position).* Displays the expense, revenue, general ledger, or budget indictor.

[10] **Budget FYs** *(numeric field, 2 positions).* Displays the budget fiscal year. This field is derived from the PMSFGVTS.

[11] **Fund** *(numeric field, max. of 3 positions).* Displays the fund. This field is derived from the PMSFGVTS.

[12] **Budget Org/Sub** *(alphanumeric field, 5 positions).* Displays the budget organization. RD does not use the Budget Sub field.

[13] **Pgm** *(alphanumeric field, max. of 9 positions).* Displays the 9-position ACCS code, which resides in the program field. This field is derived from the ACXT.

[14] **BOC/Rev Source** *(Numeric field, max. of 4 positions).* Displays the budget object code based on the Exp/GL/Rev/Bud indicator. If **Field 9** is ***E*** or ***R***, then this field is mapped to the object class. Otherwise, this field is blank.

[15] **Rptg** *(alphanumeric field, 2 positions).* Displays the 2-position special purpose code, which resides in the reporting category.

[16] **Vendor** *(alphanumeric field, max. of 11 positions).* Displays the vendor code. This field is derived from the VCXT.

[17] **Name** *(alphanumeric field, max. of 30 positions per line).* Displays the vendor's name. This field is derived from the VCXT.

[18] **Amount** *(numeric field, max. of 15 positions).* Displays the line amount. This field is derived from the object class amount.

[19] **Inc/Dec Ind** *(alpha field, 1 position).* Displays the increase (***I***) or decrease (***D***) amount indicator.

[20] **Description** *(alphanumeric field, max. of 30 positions).* Displays the GVTS invoice number. The GVTS invoice number is as follows: **positions 1–12** represent the GVTS invoice number; **position 13** is an *; **positions 14–15** represent the GVTS invoice supplemental number; **position 16** is an *; and **positions 17–22** represent the General Ledger register schedule number.

TRVL Obligation Document (XO)

The XO is generated by the TRVL interface to FFIS. The XO is used to record the obligation/deobligation of travel expenses. An XO can be used to create a new obligation/deobligation or modify an existing obligation/deobligation. An XO is created when the TRVL Function Code is ***09***.

The TRVL interface generates the XO for the AD–202, Travel Authorization/Advance, the AD–202M, Travel Authorization/Advance, Attachment for Multiple Travelers, the AD–202R, Travel Authorization/Advance, Attachment for Relocation Travel, the AD–202RE, Travel Authorization/Advance, Attachment for Election of Separate Relocation Allowances, and the SF–1164, Claim for Reimbursement for Expenditures on Official Business.

The XO is a clone of the baseline Travel Order Document. **Figure 4:53** and **Figure 4:54** show the XO header and line screens.

After the XO is processed and accepted in FFIS, the transaction updates the following tables:

- Treasury Schedule Control Header and Treasury Schedule Control Line Inquiry Tables (TSCH, TSCL)
- Voucher Header Inquiry and Voucher Line Inquiry Tables (PVHT, PVLT)
- Travel Order Header Inquiry Table (TOHT)
- Travel Order Line Inquiry Table (TOLT)
- Travel Interface Document Inquiry Table (TIDT)

```
COMMND:                DOCID: XO  [1]                        XX/XX/XX 09:04:28
STATUS:                BATID:                  SEC2:
                            TRAVEL ORDER DOCUMENT
TRANS DATE :          ACCTG PD:       BFYS:       FUND:        DOC ACTION:[2]
EMPLOYEE ID: [3]         HOME ORG: [4]       TRAVEL TYPE: [5]   PRINT FLAG:[6]
NAME : [7]                                ADDR1:
ADDR2:                                    ADDR3:
   BEGIN DATE:[8]        END DATE:[9]        END DESC:                TEXT TYPE:
TRAVEL MODE: [10]  TRAVEL PURP:   [11]  PER DIEM CD: [12] RATE:              I/D:
TRANS TYPE : [13] PCS AUTH CODE:          TOTAL OBLIGATION: [14]
ITINERARY  : [15]

OUTSTANDING BAL:                       CREDIT CARD:   ADDR CODE:   SCHED CAT:
REMAINING ADVNC:                     PRINT CHECK:   TRNS TYPE:    SCHED FY:
ADDR1:                                  CHECK TYPE:   SCHEDULE NUMBER:
ADDR2:                                SCHD PAY DATE:            SEQ NO:
ADDR3:                                    ADVANCE AMOUNT:               I/D:
CMNT1:                                          ADVANCE NUMBER:
CMNT2:                                        DISB OFF:      NO CHECK DISB:
BFY:     FUND:          BUDGET ORG/SUB:             COST ORG/SUB:
JOB:           PROGRAM:                  RPTG:       DESCRIPTION:
```

Figure 4:53. TRVL Obligation Document (XO) header fields (Travel Order Document)

```
COMMND:                DOCID: XO                          XX/XX/XX 11:29:20
STATUS:                BATID:                SEC2:          000–000 OF 001
01–
     LINE NUMBER: [16]              BUDGET FYS:    [17]       FUND:   [18]
     BUD ORG/SUB: [19]      /          PROGRAM:    [20]     BOC/SUB:   [21]/
    COST ORG/SUB:           /     REPORTING CATG:    [22]  JOB NUMBER:
     CLOSED BFYS:                    CLOSED FUND:          DESC CODE:    [23]
          AMOUNT: [24]               I/D:  [25]  DESC:
02–
     LINE NUMBER:                   BUDGET FYS:              FUND:
     BUD ORG/SUB:           /          PROGRAM:            BOC/SUB:      /
    COST ORG/SUB:           /     REPORTING CATG:         JOB NUMBER:
     CLOSED BFYS:                    CLOSED FUND:          DESC CODE:
          AMOUNT:                   I/D:    DESC:
03–
     LINE NUMBER:                   BUDGET FYS:              FUND:
     BUD ORG/SUB:           /          PROGRAM:            BOC/SUB:      /
    COST ORG/SUB:           /     REPORTING CATG:         JOB NUMBER:
     CLOSED BFYS:                    CLOSED FUND:          DESC CODE:
          AMOUNT:                   I/D:    DESC:
```

Figure 4:54. TRVL Obligation Document (XO) line fields (Travel Order Document)

- Orders Header Inquiry and Purchase Order Accounting Line Inquiry Tables (OBLH, OBLL)
- Budget Execution Inquiry Tables (ALOC, ALLT, SASP)
- General Ledger Balance Inquiry Table (GLBL)
- Cross-Reference table (DXRF)
- Document Tracking tables (DCTE, DCTI)

To access the XO through the Document Suspense File, see **Part 2, Using The Document Suspense File**.

The fields that are populated on the XO through the interface process are listed below:

Command Fields

[1] **DocID** *(alphanumeric field, max. of 15 positions).* Displays the transaction code (***XO***), the sec1 code (i.e., the 2 position division code) and the document number (*max. of 11 positions).* The document number is the GL-Reg-Schd-Number followed by a 5-position sequential number.

Header Fields

[2] **Doc Action** *(alpha field, 1 position).* Displays ***E*** (original entry) or ***M*** (modification).

[3] **Employee ID** *(alphanumeric field, max. of 11 positions).* Displays the payee's identification number then ***ES***.

[4] **Home Org** *(numeric field, max. of 7 positions).* Displays the home organization inferred from the VEND.

[5] **Travel Type** *(alpha field, 3 positions).* Displays the travel type.

[6] **Print Flag** *(alpha field, 1 position).* Displays ***N*** (no).

[7] **Name, Addr2** *(alphanumeric field, max. of 120 positions).* Displays the name and address inferred from the VEND.

[8] **Begin Date** (*numeric field, 6 positions*). Displays the begin date.

[9] **End Date** (*numeric field, 6 positions*). Displays the end date.

[10] **Travel Mode** (*alpha field, max. of 4 positions*). Displays the travel mode inferred from the TMOD. The system defaults to ***M*** (miscellaneous).

[11] **Travel Purp** (*alphanumeric field, max. of 5 positions*). Displays the travel purpose code inferred from the TPRP.

[12] **Per Diem Cd** (*alpha field, 1 position*). Displays the per diem code inferred from the TPDC. The system defaults to ***P*** (per diem).

[13] **Trans Type** (*alphanumeric field, 2 positions*). Displays the transaction type inferred from the GLXT using the Obligation 420-character record.

[14] **Total Obligation** (*numeric field, max. of 14 positions*). Displays the unsigned net total of all lines.

[15] **Itinerary** (*numeric field, max. of 60 positions).* Displays the Authorization Number.

Line Fields

[16] **Line Number** *(numeric field, 3 positions).* Displays a sequential 3-position number starting at ***001***.

[17] **Budget FYs** *(numeric field, 2 positions).* Displays the budget fiscal year.

[18] **Fund** *(alphanumeric field, max. of 3 positions).* Displays the fund.

[19] **Budget Org/Sub** *(alphanumeric field, 5 positions).* Displays the budget organization. RD does not use the Budget Sub field.

[20] **Program** *(alphanumeric field, max. of 9 positions*). Displays the 9-position ACCS code, which resides in the program field. This field is derived from the ACXT.

[21] **BOC/Sub** (*numeric field, 4 positions*). Displays the budget object class.

[22] **Reporting Catg** *(alphanumeric field, 2 positions).* Displays the 2-position special purpose code, which resides in the reporting category field.

[23] **Desc Code** (*alpha field, 1 position*). Displays ***G***.

[24] **Amount** (*numeric field, max. of 14 positions*). Displays the amount of obligation.

[25] **I/D** *(alpha field, 1 position).* If the GL-Norm-Reversal is ***R***, then this field is ***D*** (decrease); if the GL-Norm-Reversal is ***N***, then this field is ***I*** (Increase).

TRVL Travel Advance Document (XA)

The XA is generated by the Travel System (TRVL) interface to FFIS. The XA is used to issue travel advances. It also provides accounting data (i.e., accounting event, accounting classification codes, dollar amount, and object code), as well as, descriptive data elements to support agency and external reports. An XA is created when the Function Code is ***01*** or ***51*** and the Payee Identification is ***Adv-SSNO***.

The TRVL interface generates the XA for the AD–202, Travel Authorization/Advance, the AD–202M, Travel Authorization/Advance, Attachment For Multiple Travelers, the AD–202R, Travel Authorization/Advance, Attachment For Relocation Travel, and the AD–202RE, Travel Authorization/Advance, Attachment for Election of Separate Relocation Allowances. For the XA, the header represents a single travel advance issued to a traveler for multiple travel authorizations. There are no lines for the XA.

The XA is a clone of the baseline Travel Order Document. **Figure 4:55** shows the XA header screen.

After the XA is processed and accepted in FFIS, the transaction updates the following tables:

- Voucher Header Inquiry and Voucher Line Inquiry Tables (PVHT, PVLT)
- Treasury Schedule Control Header and Treasury Schedule Control Line Inquiry Tables (TSCH, TSCL)
- Travel Advance Inquiry Table (TADV)
- Travel Advance Header Table (TAHT)
- Travel Interface Document Inquiry Table (TIDT)
- Budget Execution tables (ALOC, ALLT, SASP)
- General Ledger Balance Inquiry Table (GLBL)
- Cross-Reference tables (DXRF, IVCH, VXRF)
- Document Tracking tables (DCTE, DCTI)

To access the XA through the Document Suspense File, see **Part 2, Using The Document Suspense File**.

The fields that are populated on the XA through the interface process are listed below:

Command Fields

[1] **DocID** *(alphanumeric field, max. of 15 positions).* Displays the transaction code (***XA***), the sec1 code (i.e., the 2 position division code) and the document number (*max. of 11 positions)*. The document number is the GL-Reg-Schd-Number followed by a 5-position sequential number.

Header Fields

[2] **Trans Date** (*numeric field, 6 positions).* Displays the transaction date. (*mmddyy*).

[3] **Acctg Period** *(numeric field, 4 positions).* Displays the open accounting period date (*mmyy).* This field is system generated with data inferred from the APCT. Note: The Acctg Pd refers to the fiscal month and year, e.g., November 2000 is 02 01.

[4] **Doc Action** *(alpha field, 1 position)*. Displays ***E***.

[5] **Employee ID** *(alphanumeric field, max. of 11 positions)*. Displays the payee's identification number plus ***E*** then ***S***.

```
COMMND:                DOCID: XA  [1]                        XX/XX/XX 09:04:28
STATUS:                BATID:                 SEC2:
                          TRAVEL ORDER DOCUMENT
TRANS DATE : [2]       ACCTG PD: [3]    BFYS:       FUND:        DOC ACTION: [4]
EMPLOYEE ID: [5]          HOME ORG:          TRAVEL TYPE: [6]    PRINT FLAG:
NAME :                                  ADDR1:
ADDR2:                                  ADDR3:
   BEGIN DATE: [7]     END DATE:[8]        END DESC:                TEXT TYPE:
TRAVEL MODE:      TRAVEL PURP:       PER DIEM CD:   RATE:               I/D:
TRANS TYPE :    PCS AUTH CODE:          TOTAL OBLIGATION:
ITINERARY  :

OUTSTANDING BAL:                       CREDIT CARD:   ADDR CODE:   SCHED CAT:[9]
REMAINING ADVNC:                       PRINT CHECK:[10] TRNS TYPE:    SCHED FY:[11]
ADDR1:[12]                              CHECK TYPE:   SCHEDULE NUMBER: [13]
ADDR2:                                 SCHD PAY DATE:    [14]    SEQ NO:
ADDR3:                                     ADVANCE AMOUNT:    [15]          I/D:
CMNT1: [16]                                     ADVANCE NUMBER:[17]
CMNT2:                                          DISB OFF:      NO CHECK DISB:
BFY:  [18] FUND:  [19]      BUDGET ORG/SUB: [20]          COST ORG/SUB:
JOB:           PROGRAM:  [21]              RPTG:  [22]   DESCRIPTION:
```

Figure 4:55. TRVL Travel Advance Document (XA) header fields (Travel Order Document)

Header Fields *(cont'd)*

[6] **Travel Type** *(alpha field, 3 positions)*. Displays ***ADV***.

[7] **Begin Date** *(numeric field, 6 positions)*. Displays the begin date.

[8] **End Date** *(numeric field, 6 positions)*. Displays the end date.

[9] **Sched Cat** *(alpha field, 1 position)*. Displays ***M*** if this is a manual schedule. If the Function Code is ***01***, this field is blank.

[10] **Print Check** *(alpha field, 1 position)*. Displays ***N*** (no).

[11] **Sched FY** *(numeric field, 2 positions)*. Displays the fiscal year derived from the first position of the GL-Reg-Schd Number (e.g., position 1=***0***, then FY=***00***). If the Function Code is ***01***, then this field is blank.

[12] **Addr 1, 2, 3** *(alphanumeric field, max. of 90 positions)*. Unless using a special address code, this field is blank.

[13] **Schedule Number** *(numeric field, max. of 9 positions)*. If the Function Code is 51, then displays the GL-Reg-Schd Number. Otherwise, this field is blank.

[14] **Schd Pay Date** *(numeric field, 6 positions)*. Displays the same date as the transaction date (**Field 2**).

[15] **Advance Amount** *(numeric field, max. of 14 positions)*. Displays the GL-Total amount.

[16] **Cmnt1** *(alphanumeric field, max. of 40 positions)*. Displays the Authorization Number, the Begin Date, and the End Date.

[17] **Advance Number** *(numeric field, 6 positions)*. Displays ***000001***.

[18] **BFY** *(numeric field, max. of 2 positions)*. Displays the budget fiscal year.

[19] **Fund** *(alphanumeric field, max. of 3 positions)*. Displays the fund.

[20] **Budget Org/Sub** *(alphanumeric field, 5 positions)*. Displays the budget organization. RD does not use the Budget Sub field.

[21] **Program** *(alphanumeric field, max. of 9 positions)*. Displays the 9-position ACCS code, which resides in the program field. This field is derived from the ACXT.

[22] **Rptg** *(alphanumeric field, 2 positions)*. Displays the 2-position special purpose code, which resides in the reporting category field.

TRVL Travel Voucher Document (Expenses) (XT)

The XT is generated by the Travel System (TRVL) interface to FFIS. The XT is used to record travel expenses, liquidate travel advances, apply amounts to outstanding travel bills of collection, and reimburse amounts owed to travelers for out-of-pocket expenses. It also provides accounting data (i.e., accounting event, accounting classification codes, dollar amount, and object code), as well as descriptive data elements to support agency and external reports. On the XT, the header represents a travel voucher submitted by an employee for the reimbursement of travel expenses and the liquidation of any related travel advances.

The TRVL interface generates the XT for the AD–616, Travel Voucher (Temporary Duty Travel) and the SF–1164, Claim For Reimbursement For Expenditures On Official Business.

The XT is a clone of the baseline Travel Voucher Document (TV). **Figure 4:56** and **Figure 4:57** show the XT header and line screens.

Note: It is important that the final voucher indicator, Block 49 of the AD–616 be checked when appropriate to ensure that the travel funds are deobligated.

After the XT is processed and accepted in FFIS, the transaction updates the following tables:

- Treasury Schedule Control Header and Treasury Schedule Control Line Inquiry Tables (TSCH, TSCL)

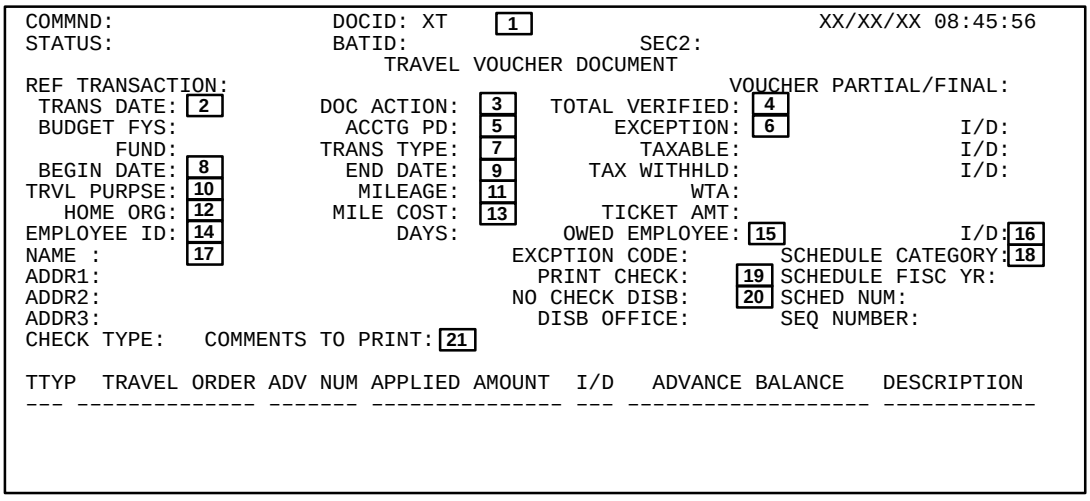

Figure 4:56. TRVL Travel Voucher Document (Expenses) (XT) header fields (Travel Voucher Document)

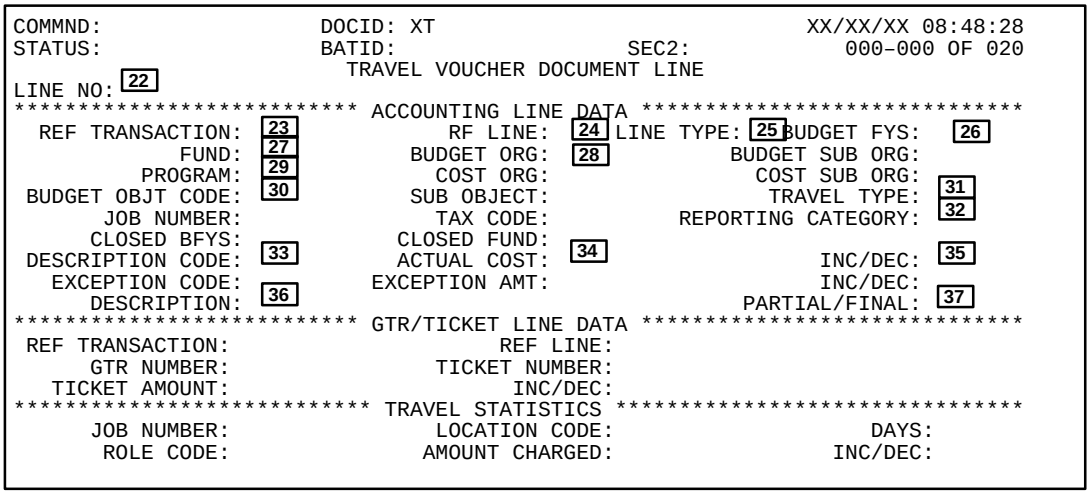

Figure 4:57. TRVL Travel Voucher Document (Expenses) (XT) line fields (Travel Voucher Document)

- Voucher Header Inquiry and Voucher Line Inquiry Tables (PVHT, PVLT)
- Budget Execution tables (ALOC, ALLT, SASP)
- General Ledger Balance Inquiry Table (GLBL)
- Travel Interface Document Inquiry Table (TIDT)
- Travel Voucher Header Table (TVHT)
- Travel Voucher Accounting Line Table (TVAT)
- Document Cross Reference Inquiry Table (DXRF)
- Document Tracking tables (DCTE, DCTI)

To access the XT through the Document Suspense File, see **Part 2,** **Using The Document Suspense File**.

The fields that are populated on the XT through the interface process are listed below:

Command Fields

[1] **DocID** *(alphanumeric field, max. of 15 positions).* Displays the transaction code (***XT***), the sec1 code (i.e., the 2 position division code) and the document number (*max. of 11 positions)*. The document number is the GL-Reg-Schd-Number followed by a 5-position sequential number.

Header Fields

[2] **Trans Date** (*numeric field, 6 positions).* Displays the transaction date. (*mmddyy*).

[3] **Doc Action** *(alpha field, 1 position)*. Displays ***E*** or ***O***.

[4] **Total Verified** *(numeric field, max. of 15 positions)*. If the Line Type is ***E***, displays the unsigned net total of all expense lines.

[5] **Acctg Pd** *(numeric field, 4 positions).* Displays the open accounting period date (*mmyy).* This field is system generated with data inferred from the APCT. Note: The Acctg Pd refers to the fiscal month and year, e.g., November 2000 is 02 01.

[6] **Exception** *(numeric field, max. of 15 positions)*. Displays zeros.

[7] **Trans Type** *(alphanumeric field, 2 positions).* Displays the transaction type inferred from the GLXT.

[8] **Begin Date** *(numeric field, 6 positions)*. Displays the begin date (*mmddyy*).

[9] **End Date** *(numeric field, 6 positions)*. Displays the end date (*mmddyy*).

[10] **Trvl Purpse** *(alphanumeric field, max. of 5 positions)*. Displays the travel purpose code as defined in the TPRP.

[11] **Mileage** *(numeric field, max. of 8 positions).* Displays the mileage.

[12] **Home Org** *(alphanumeric field, max. of 7 positions)*. Displays the home organization inferred from the VEND.

[13] **Mile Cost** *(numeric field, max. of 8 positions).* Displays the Mileage-Total-Amount derived from the TRVL work record. If Miles is ***0*** or blank, this field displays blank spaces.

[14] **Employee ID** *(alphanumeric field, max. of 11 positions)*. Displays the Payee-Ident then ***E***.

[15] **Owed Employee** *(numeric field, max. of 15 positions)*. Displays the Net-To-Traveler amount (total claimed less amount applied) derived from the TRVL work record.

[16] **I/D** *(alpha field, 1 position)*. Displays ***I*** (Increase) or ***D*** (Decrease).

[17] **Name, Addr 1, 2, 3** *(alphanumeric field, max. of 90 positions)*. Displays the name and address inferred from the VEND.

[18] **Schedule Category** *(alpha field, 1 position).* Displays ***A*** (EFT), ***T*** (check), or ***M*** (manual) based on the address in the VEND and the EFT flag setting.

[19] **Print Check** *(alpha field, 1 position)*. Displays ***Y*** (yes).

[20] **No Check Disb** *(alpha field, 1 position)*. Displays ***N*** (no).

[21] **Comments to Print** *(alphanumeric field, max. of 40 positions)*. Displays the Authorization Number, the Begin Date, and the End Date.

Line Fields

[22] **Line No** *(numeric field, 3 positions).* Displays a sequential 3-position number starting with the last XT Line Number + ***1***.

[23] **Ref Transaction** *(alphanumeric field, max. of 13 positions)*. Displays the reference transaction code and number. If the Obl-Agency indicator is ***Y***, then this field is derived from the TIDT.

[24] **RF Line** *(numeric field, max. of 3 positions).* Displays the reference transaction line number.

[25] **Line Type** *(alpha field, 1 position)*. Displays ***E*** (expense) or ***O*** (owed to employee).

Line Fields *(cont'd)*

[26] **Budget FYs** *(numeric field, 2 positions)*. Displays the budget fiscal year.

[27] **Fund** *(alphanumeric field, max. of 3 positions)*. Displays the fund.

[28] **Budget Org** *(alphanumeric field, 5 positions)*. Displays the budget organization. RD does not use the Budget Sub field.

[29] **Program** *(alphanumeric field, max. of 9 positions)*. Displays the 9-position ACCS code, which resides in the program field. This field is derived from the ACXT.

[30] **Budget Objt Code** *(numeric field, 4 positions)*. Displays the object class code. If the Line Type is ***O***, this field is blank.

[31] **Travel Type** *(alphanumeric field, 3 positions)*. If Line Type is ***E***, displays either ***TDU*** or ***TDY***. If Line Type is ***O***, this field is blank.

[32] **Reporting Category** *(alphanumeric field, 2 positions)*. Displays the 2-position special purpose code, which resides in the reporting category field.

[33] **Description Code** *(alphanumeric field, 1 position)*. If the Line Type is ***O***, this field is blank.

[34] **Actual Cost** *(numeric field, max. of 14 positions)*. Displays the GL-Total-Amount.

[35] **Inc/Dec** *(alpha field, 1 position)*. Displays ***I*** (increase) or ***D*** (decrease).

[36] **Description** *(alphanumeric field, max. of 30 positions)*. Displays the following information: **positions 1–13** represent the authorization number; **positions 14–22** represent the Batch Number; and **positions 23–26** represent the GL-Reg-Schd Type.

[37] **Partial/Final** *(alpha field, 1 position)*. Displays the partial (***P***) or final (***F***) payment indicator.

TRVL Third Party Payment Voucher Document (XP)

The XP is generated by the Travel System (TRVL) interface to FFIS. The XP is used to record the payment of third-party expenses for relocation vouchers. It also provides accounting data (i.e., accounting event, accounting classification codes, dollar amount, and object code), as well as descriptive data elements to support agency and external reports. On the XP, the header represents a payment made to a third-party vendor for relocation services. Each line in an XP contains accounting distribution information. One line is generated for each accounting distribution to be charged.

The TRVL interface generates the XP for the AD–616R, Travel Voucher (Relocation).

The XP is a clone of the baseline Travel Related Payment Voucher Document (TP). **Figure 4:58** and **Figure 4:59** show the XP header and line screens.

After the XP is processed and accepted in FFIS, the transaction updates the following tables:

- Treasury Schedule Control Header and Treasury Schedule Control Line Inquiry Tables (TSCH, TSCL)
- Voucher Header Inquiry and Voucher Line Inquiry Tables (PVHT, PVLT)
- Travel Interface Document Inquiry Table (TIDT)
- Travel-Related Voucher Line Inquiry Table (TPLT)
- Orders Header Inquiry and Purchase Order Accounting Line Inquiry Tables (OBLH, OBLL)

```
COMMND:                 DOCID: XP   [1]                        XX/XX/XX 15:26:20
STATUS:                 BATID:                  SEC2:
H-
                                   TRAVEL RELATED
                              PAYMENT VOUCHER DOCUMENT

     TP DATE: [2]           ACCTG PD: [3]   BUDGET FYS:         FUND:
         ACTION: [4]      TRANS TYPE:          TP TYPE:     PROMPT PAY TYPE:
    SCHED PYMT DATE:          DESCR:              D.O:      INV DATE:
     REF DOC ID:                VENDOR INV #:               LOG DATE:
    VENDOR CODE: [5]          DOC TOTAL: [6]               ACCP DATE:
      SCHD FISC YR:     SCHD CAT: [7]  SCHD TYPE: [8]     SCHD NUMBER:
           NAME:  [9]                                  PMT SEQUENCE #:
       ADDRESS1:                                     NO CHECK DISB FLAG:
             2:                                             CHECK TYPE:
             3:
    AGENCY HEAD APPROVAL:              DISCOUNT LOST REASON CODE:
     DISCOUNT %:          DISCOUNT AMOUNT:             DISCOUNT DAYS:
     DISCOUNT %:          DISCOUNT AMOUNT:             DISCOUNT DAYS:
     DISCOUNT %:          DISCOUNT AMOUNT:             DISCOUNT DAYS:
    COMMENTS TO PRINT: [10]
```

Figure 4:58. TRVL Third Party Payment Voucher Document (XP) header fields (Travel Related Payment Voucher Document)

```
COMMND:                 DOCID: XP                              XX/XX/XX 15:27:31
STATUS:                 BATID:                  SEC2:             000-000 OF 001
01-
    LINE #: [11]  REF DOC #:                REF DOC LINE:     ACCP DATE:
    VENDOR INV #/LINE:                   INV DATE:            LOG DATE:   [12]
    TRANS TYPE  : [13] BFYS: [14]   FUND: [15]     BUDGET ORG/SUB:  [16]
    COST ORG/SUB:              PROGRAM: [17]            BOC/SUB:  [18]
    JOB NUMBER  :                 RPTG: [19]         GL ACCOUNT:
    REV SRCE/SUB:          CLOSED BFYS:            CLOSED FUND:
       LINE TYPE:          DESCRIPTION: [20]
    QUANTITY    :               AMOUNT: [21]                I/D:       P/F: [22]
    INT REASON  :     DISC LOST RSN CODE:            RELATED GBL:
    EMPLOYEE ID : [23]           TAX CODE: [24]     TRAVEL ORDER #:

      DISCOUNT %:        DISCOUNT AMOUNT:              DISCOUNT DAYS:
      DISCOUNT %:        DISCOUNT AMOUNT:              DISCOUNT DAYS:
      DISCOUNT %:        DISCOUNT AMOUNT:              DISCOUNT DAYS:
```

Figure 4:59. TRVL Third Party Payment Voucher Document (XP) line fields (Travel Related Payment Voucher Document)

- Budget Execution tables (ALOC, ALLT, SASP)
- General Ledger Balance Inquiry Table (GLBL)
- Document Cross Reference Inquiry Table (DXRF)
- Document Tracking tables (DCTE, DCTI)

To access the XP through the Document Suspense File, see **Part 2, Using The Document Suspense File**.

The fields that are populated on the XP through the interface process are listed below:

Command Fields

[1] **DocID** *(alphanumeric field, max. of 15 positions).* Displays the transaction code (***XP***), the sec1 code (i.e., the 2 position division code) and the document number (*max. of 11 positions)*. The document number is the GL-Reg-Schd-Number followed by a 5-position sequential number.

Header Fields

[2] **TP Date** (*numeric field, 6 positions)*. Displays the transaction date. (*mmddyy*).

[3] **Acctg Pd** *(numeric field, 4 positions).* Displays the open accounting period date (*mmyy).* This field is system generated with data inferred from the APCT. Note: The Acctg Pd refers to the fiscal month and year, e.g., November 2000 is 02 01.

[4] **Action** *(alpha field, 1 position)*. Displays ***E***.

[5] **Vendor Code** *(alphanumeric field, max. of 11 positions)*. Displays the Reloc-Svc-Co derived from the VCXT.

[6] **Doc Total** *(numeric field, max. of 15 positions)*. Displays the unsigned net total of all lines.

[7] **Schd Cat** *(alpha field, 1 position)*. Displays the schedule category. The system generates ***T*** for an automated Treasury schedule, ***M*** for a manual schedule, or ***A*** for an ACH tape.

[8] **Schd Type** *(alpha field, 1 position)*. Displays ***T*** (transportation) or ***M*** (miscellaneous).

[9] **Name, Address 1,2,3** *(alphanumeric field, max. of 120 positions)*. Displays the name and address inferred from the VEND.

[10] **Comments To Print** *(alphanumeric field, max. of 40 positions)*. Displays the following information: **positions 1–17** represent the employee's last name; **position 18** represent the first letter of the employee's first name; **position 19** is a blank space; and **positions 20–32** represent the authorization number.

Line Fields

[11] **Line #** *(numeric field, 3 positions).* Displays a sequential 3-position number.

[12] **Log Date** *(numeric field, 6 positions)*. Displays the date derived from the Date-Received-NFC field on the TRVL work record.

[13] **Trans Type** *(alphanumeric field, 2 positions)*. Displays the transaction type derived from the GLXT using the Expense 420-character record.

[14] **BFYs** *(numeric field, 2 positions)*. Displays the budget fiscal year.

[15] **Fund** *(alphanumeric field, max. of 3 positions)*. Displays the fund.

[16] **Budget Org/Sub** *(alphanumeric field, 5 positions)*. Displays the budget organization. RD does not use the Budget Sub field.

[17] **Program** *(alphanumeric field, max. of 9 positions)*. Displays the 9-position ACCS code, which resides in the program field. This field is derived from the ACXT.

[18] **BOC/Sub** *(numeric field, 4 positions)*. Displays the budget object class code. This field is derived from the ACXT.

[19] **Rptg** *(alphanumeric field, 2 positions)*. Displays the 2-position special purpose code, which resides in the reporting category field.

[20] **Description** *(alphanumeric field, max. of 30 positions)*. Displays the following information: **positions 1–13** represent the authorization number; **positions 14–18** represent the Begin Date; **positions 19–23** represent the End Date; **positions 24–26** represent the Tax-St-Code; and **positions 27–28** represent the Function Code.

[21] **Amount** *(numeric field, max. of 15 positions)*. Displays the total dollar amount of the line.

[22] **P/F** *(alpha field, 1 position)*. Displays the partial (***P***) or final (***F***) payment indicator.

[23] **Employee ID** *(alphanumeric field, max. of 11 positions)*. Displays the payee's identification number plus ***E***.

[24] **Tax Code** *(alpha field, 1 position)*. Displays the line type ***E***.

TRVL Travel Voucher Document (Relocations) (XV)

The XV is generated by the Travel System (TRVL) interface to FFIS. The XV is used to record relocation expenses, liquidate relocation advances, apply amounts to outstanding travel bills of collection, and reimburse employees for out-of-pocket relocation expenses. The XV provides accounting data (i.e., accounting event, accounting classification codes, dollar amount, and object code), as well as descriptive data elements to support agency and external reports. On the XV, the header represents a relocation voucher submitted by an employee for the reimbursement of relocation expenses and the liquidation of any related travel advances. Each line in an XV contains accounting distribution information. One line is generated for each accounting distribution to be charged. An XV is created when the Type of Claim *does not* equal ***RC***.

The TRVL interface generates the XV for the AD–616R, Travel Voucher (Relocation).

The XV is a clone of the baseline Travel Voucher Document (TV). **Figure 4:60** and **Figure 4:61** show the XV header and line screens.

After the XV is processed and accepted in FFIS, the transaction updates the following tables:

- Treasury Schedule Control Header and Treasury Schedule Control Line Inquiry Tables (TSCH, TSCL)
- Voucher Header Inquiry and Voucher Line Inquiry Tables (PVHT, PVLT)

```
COMMND:                  DOCID: XV [1]                          XX/XX/XX 08:45:56
STATUS:                  BATID:                  SEC2:
                             TRAVEL VOUCHER DOCUMENT
REF TRANSACTION:                                        VOUCHER PARTIAL/FINAL:
 TRANS DATE: [2]       DOC ACTION: [3]  TOTAL VERIFIED: [4]
 BUDGET FYS:             ACCTG PD: [5]        EXCEPTION:                 I/D:
       FUND:            TRANS TYPE: [6]          TAXABLE: [7]           I/D:
 BEGIN DATE: [8]          END DATE: [9]    TAX WITHHLD: [10]            I/D:
TRVL PURPSE: [11]          MILEAGE:              WTA: [12]
   HOME ORG: [13]         MILE COST:          TICKET AMT:
EMPLOYEE ID: [14]              DAYS:       OWED EMPLOYEE: [15]           I/D:
NAME : [16]                            EXCPTION CODE:       SCHEDULE CATEGORY: [17]
ADDR1:                                   PRINT CHECK: [18]  SCHEDULE FISC YR:
ADDR2:                                 NO CHECK DISB: [19]  SCHED NUM:
ADDR3:                                   DISB OFFICE:       SEQ NUMBER:
CHECK TYPE:   COMMENTS TO PRINT: [20]

TTYP  TRAVEL ORDER ADV NUM APPLIED AMOUNT  I/D   ADVANCE BALANCE   DESCRIPTION
--- -------------- ------- --------------- --- ------------------- ------------
```

Figure 4:60. TRVL Travel Voucher Document (relocations) (XV) header fields (Travel Voucher Document)

```
COMMND:                  DOCID: XV                              XX/XX/XX 08:48:28
STATUS:                  BATID:                  SEC2:             000–000 OF 020
                           TRAVEL VOUCHER DOCUMENT LINE
LINE NO: [21]
************************** ACCOUNTING LINE DATA ******************************
  REF TRANSACTION: [22]          RF LINE: [23] LINE TYPE: [24] BUDGET FYS:  [25]
             FUND: [26]       BUDGET ORG: [27]          BUDGET SUB ORG:
          PROGRAM: [28]         COST ORG:                  COST SUB ORG:
 BUDGET OBJT CODE: [29]         SUB OBJECT:                 TRAVEL TYPE:  [30]
       JOB NUMBER:               TAX CODE: [31]      REPORTING CATEGORY:  [32]
      CLOSED BFYS:           CLOSED FUND:
 DESCRIPTION CODE: [33]       ACTUAL COST: [34]                INC/DEC:  [35]
   EXCEPTION CODE:          EXCEPTION AMT:                     INC/DEC:
      DESCRIPTION: [36]                                   PARTIAL/FINAL:  [37]
************************** GTR/TICKET LINE DATA ******************************
 REF TRANSACTION:                 REF LINE:
      GTR NUMBER:              TICKET NUMBER:
   TICKET AMOUNT:                   INC/DEC:
************************** TRAVEL STATISTICS *********************************
       JOB NUMBER:              LOCATION CODE:                    DAYS:
        ROLE CODE:             AMOUNT CHARGED:                 INC/DEC:
```

Figure 4:61. TRVL Travel Voucher Document (Relocations) (XV) line fields (Travel Voucher Document)

- Budget Execution tables (ALOC, ALLT, SASP)
- Travel Interface Document Inquiry Table (TIDT)
- Travel Voucher Header Table (TVHT)
- Travel Voucher Accounting Line Table (TVAT)
- General Ledger Balance Inquiry Table (GLBL)
- Document Cross Reference INquiry Table (DXRF)
- Document Tracking tables (DCTE, DCTI)

To access the XV through the Document Suspense File, see **Part 2, Using The Document Suspense File**.

The fields that are populated on the XV through the interface process are listed below:

Command Fields

[1] **DocID** *(alphanumeric field, max. of 15 positions).* Displays the transaction code (***XT***), the sec1 code (i.e., the 2 position division code) and the document number (*max. of 11 positions).* The document number is the GL-Reg-Schd-Number followed by a 5-position sequential number.

Header Fields

[2] **Trans Date** (*numeric field, 6 positions).* Displays the transaction date (*mmddyy*).

[3] **Doc Action** *(alpha field, 1 position).* Displays ***E*** (expense), ***O*** (owed to employee) or ***T*** (Federal withholding for employee).

[4] **Total Verified** *(numeric field, max. of 15 positions).* If the Line Type is ***E***, displays the unsigned net total of all expense lines.

[5] **Acctg Pd** *(numeric field, 4 positions).* Displays the open accounting period date (*mmyy).* This field is system generated with data inferred from the APCT. Note: The Acctg Pd refers to the fiscal month and year, e.g., November 2000 is 02 01.

[6] **Trans Type** *(alphanumeric field, 2 positions).* Displays the transaction type inferred from the GLXT.

[7] **Taxable** *(numeric field, max. of 15 positions).* Displays the taxable amount.

[8] **Begin Date** *(numeric field, 6 positions).* Displays the begin date (*mmddyy*).

[9] **End Date** *(numeric field, 6 positions).* Displays the end date (*mmddyy*).

[10] **Tax Withhld** (*numeric field, max. of 15 positions*). If the Line Type is ***T***, displays the unsigned net total of all expense lines.

[11] **Trvl Purpose** *(alphanumeric field, max. of 5 positions).* Displays the travel purpose code as defined in the TPRP.

[12] **WTA** *(alphanumeric field, max. of 15 positions).* Displays the WTA amount derived from the TRVL work record.

[13] **Home Org** *(alphanumeric field, max. of 7 positions).* Displays the home organization inferred from the VEND.

[14] **Employee ID** *(alphanumeric field, max. of 11 positions).* Displays the Payee-Ident then ***E***.

[15] **Owed Employee** *(numeric field, max. of 15 positions).* Displays the Net-To-Traveler amount (total claimed plus WTA amount, less taxes withheld, less amount applied) derived from the TRVL work record.

[16] **Name, Addr 1, 2, 3** *(alphanumeric field, max. of 90 positions).* Displays the employee's name and address.

[17] **Schedule Category** *(alpha field, 1 position).* Displays the schedule category. The system generates ***T*** for an automated Treasury schedule, ***M*** for a manual schedule, or ***A*** for an ACH tape.

[18] **Print Check** *(alpha field, 1 position).* If the Function Code is ***27*** (manual transaction), then ***N*** (no) is displayed. Otherwise, defaults to ***Y*** (yes).

[19] **No Check Disb** *(alpha field, 1 position).* Displays ***N*** (no).

[20] **Comments to Print** *(alphanumeric field, max. of 40 positions).* Displays the Begin Date, the End Date, and the Authorization Number.

Line Fields

[21] **Line No** *(numeric field, 3 positions).* Displays a sequential 3-digit number starting with the last XV Line Number + ***1***.

[22] **Ref Transaction** *(alphanumeric field, 2 positions).* If Line Type is ***E*** and the TIDT reflects an obligating document, then this field is derived from the TIDT. Otherwise, this field is blank. If Line Type is ***O*** or ***T***, this field is blank.

[23] **RF Line** *(alphanumeric field, 3 positions).* If Line Type is ***E***, displays ***MMM***. If Line Type is ***O*** or ***T***, this field is blank.

[24] **Line Type** *(alpha field, 1 position).* Displays ***E***, ***O***, or ***T***.

Line Fields *(cont'd)*

25 **Budget FYs** *(numeric field, 2 positions)*. Displays the budget fiscal year.

26 **Fund** *(alphanumeric field, max. of 3 positions)*. Displays the fund.

27 **Budget Org** *(alphanumeric field, 5 positions)*. Displays the budget organization. RD does not use the Budget Sub field.

28 **Program** *(alphanumeric field, max. of 9 positions)*. Displays the 9-position ACCS code, which resides in the program field. This field is derived from the ACXT.

29 **Budget Objt Code** *(numeric field, 4 positions)*. If Line Type is ***E***, displays the object class code. If the Line Type is ***O*** or ***T***, this field is blank.

30 **Travel Type** *(alphanumeric field, 3 positions)*. If Line Type is ***E***, displays the Type Of Travel. If the Line Type is ***O*** or ***T***, this field is blank.

31 **Tax Code** *(alphanumeric field, 3 positions)*. If Line Type is ***E*** (expense), then displays ***Y*** (yes). Otherwise, this field is blank.

32 **Reporting Category** *(alphanumeric field, 2 positions)*. Displays the 2-position special purpose code, which resides in the reporting category field.

33 **Description Code** *(alphanumeric field, 1 position)*. If the Line Type is ***O*** (owed employee) or ***T*** (federal withholding for employee) this field is blank.

34 **Actual Cost** *(numeric field, max. of 14 positions)*. If Line Type is ***E***, this field is blank. If Line Type is ***O***, displays the prorated amount to the traveler. If Line Type is ***T***, displays the GL-Total-Amount.

35 **Inc/Dec** *(alpha field, 1 position)*. Displays ***I*** (increase) or ***D*** (decrease).

36 **Description** *(alphanumeric field, max. of 30 positions)*. Displays the following information: **positions 1–13** represent the authorization number if Line Type is ***E*** or ***;T;*** **positions 14–22** represent the Batch Number; **positions 23–26** represent the GL-Reg-Schd Type; and **positions 27–28** represent the Function Code. If Line Type is ***O***, displays the Begin Date, a space, the End Date, a space, the Authorization Number, and spaces.

37 **Partial/Final** *(alpha field, 1 position)*. Displays the partial (***P***) or final (***F***) payment indicator.

UTVN Accrual Document (SU)

The SU is generated by the Utility Vendors System (UTVN) interface to FFIS. The SU is used to record accrual information in FFIS by providing accounting data (i.e., accounting event, accounting classification codes, dollar amount, and object code), as well as, descriptive data elements to support agency and external reports. The SU records monthly accruals at the end of each month and is set to automatically reverse at the beginning of the next month.

The interface creates a single SU accrual document header and two document lines. The first document line records the accrual and the second, if applicable, backs out the commitment for the amount of the accrual which is reversed at the beginning of the next month. Various fields on the SU are system generated with data from the UTVN interface.

The SU is a clone of the baseline Standard Voucher Document (SV). **Figure 4:62** and **Figure 4:63** show the SU header and line screens.

After the SU is processed and accepted in FFIS, the transaction updates the following tables:

- Journal Voucher and Standard Journal Inquiry Table (JVLT)
- Self-Reversing Journal Voucher Inquiry Table (RVJV)
- Budget Execution tables (ALOC, ALLT, SASP)
- Cross-Reference tables (DXRF, VXRF)

To access the SU through the Document Suspense File, see **Part 2,** **Using The Document Suspense File**.

The fields that are populated on the SU through the interface process are listed below:

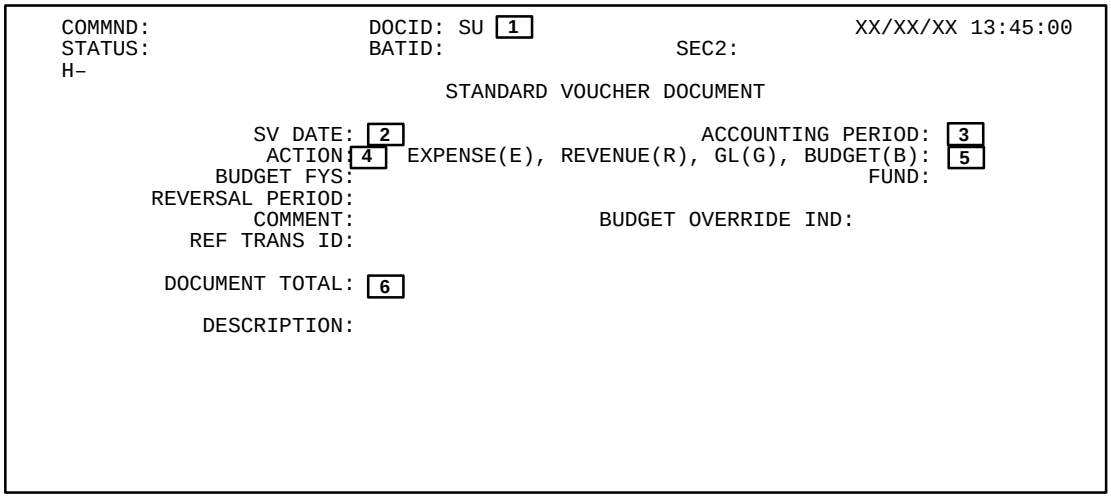

Figure 4:62. UTVN Accrual Document (SU) header fields (Standard Voucher Document)

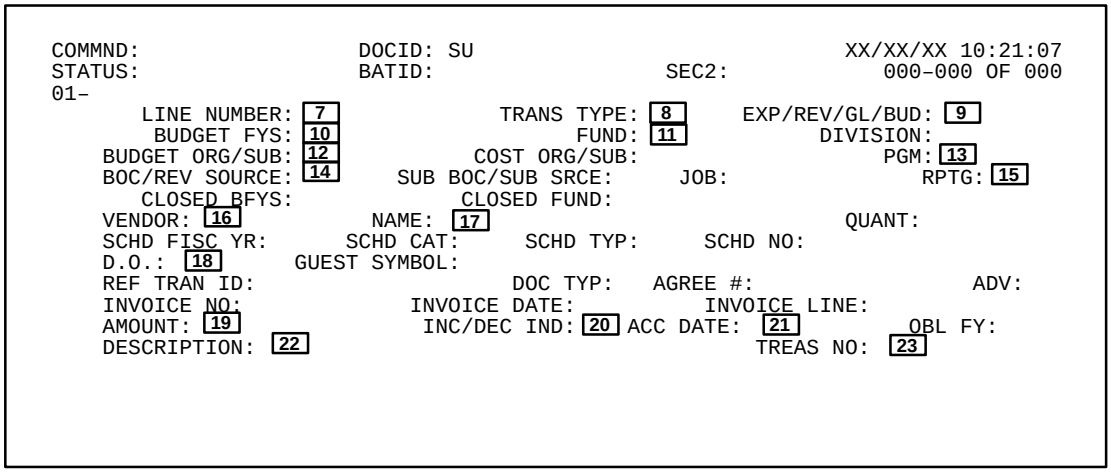

Figure 4:63. UTVN Accrual Document (SU) line fields (Standard Voucher Document)

Command Fields

1 **DocID** *(alphanumeric field, max. of 15 positions).* Displays the transaction code (***SU***), the sec1 code (i.e., the 2 position division code) and the document number (*max. of 11 positions)*.

Header Fields

2 **SV Date** (*numeric field, 6 positions).* Displays the date (*mmddyy*) of the document. This field is system generated with data inferred from the date parameter file, if specified, or from the DATE.

3 **Accounting Period** *(numeric field, 4 positions).* Displays the open accounting period date (*mmyy).* This field is system generated with data inferred from the APCT.Note: The Accounting Period refers to the fiscal month and year, e.g., November 2000 is 02 01.

4 **Action** *(alpha field, 1 position).* The system generates ***E*** in this field which indicates the document is being added.

5 **Expense (E), Revenue (R), GL (G), Budget (B)** *(alpha field, 1 position)*. Displays the expense, revenue, general ledger, or budget indicator.

6 **Document Total** *(numeric field, max. of 15 positions).* Displays the document total. This field is system generated and is calculated by the interface program as the unsigned sum of all lines.

Line Fields

7 **Line Number** (*numeric field, 3 positions).* This field is system generated by the interface program where the first line is assigned ***001***.

8 **Trans Type** *(alphanumeric field, 2 positions).* Displays the transaction type.

9 **Exp/Rev/GL/Bud** *(alpha field, 1 position)*. Displays the expense, revenue, general ledger, or budget indicator.

10 **Budget FYs** (*numeric field, 2 positions)*. Displays the budget fiscal year.

11 **Fund** *(alphanumeric field, max. of 3 positions)*. Displays the fund.

12 **Budget Org/Sub** *(alphanumeric field, 5 positions)*. Displays the budget organization. RD does not use the Budget Sub field.

13 **Pgm** *(alphanumeric field, max. of 9 positions)*. Displays the 9-position ACCS code, which resides in the program field. This field is derived from the ACXT.

14 **BOC/Rev Source** *(numeric field, max. of 4 positions)*. Displays the budget object code based on the Exp/GL/Rev/Bud indicator. If **Field 9** is ***E*** or ***R***, then this field is mapped to the object class. Otherwise, this field is blank.

15 **Rptg** *(alphanumeric field, 2 positions)*. Displays the 2-position special purpose code, which resides in the reporting category field.

16 **Vendor** *(alphanumeric field, max. of 11 positions).* Displays the vendor code derived from the VCXT.

17 **Name** *(alphanumeric field, max. of 30 positions).* Displays the vendor's name.

18 **D. O.** *(alphanumeric field, max. of 4 positions).* Displays the disbursing office number with **positions 1–2** representing the DO code**.**

19 **Amount** *(numeric field, max. of 15 positions).* Displays the line amount. This field is derived from the object class amount.

20 **Inc/Dec Ind** *(alpha field, 1 position).* Displays the increase (***I***) or decrease (***D***) amount indicator.

21 **Acc Date** (*numeric field, 6 positions).* Displays the accomplished date (*mmddyy*) derived from the schedule confirmation date.

22 **Description** *(alphanumeric field, max. of 30 positions).* Displays the description.

23 **Treas No** *(numeric field, max. of 11 positions).* Displays the schedule number.

UTVN Payment Voucher Document (UV)

The UV is generated by the Utility Vendors System (UTVN) interface to FFIS. The UV is used to record authorization of payment to a vendor for goods and/or services accepted and invoiced, records revenue refunds, and records balance sheet transfers. It also provides accounting data (i.e., accounting event, accounting classification codes, dollar amount, and object code), as well as, descriptive data elements to support agency and external reports.

The UTVN interface generates the UV for the AD–474, Transmittal–Telephone and Utilities and vendor invoices. The UTVN creates a single UV document header which represents the portion of a specific invoice charged to an account number for UTVN. Each UV line represents the charges specified and the accounting to be charged for a specific percentage of the expenses for a specified type of service. The total amount of all lines consolidates to the total on the header screen. Various fields on the UV are system generated with data from the UTVN interface.

The UV is a clone of the baseline Payment Voucher Document (PV). **Figure 4:64** and **Figure 4:65** show the UV header and line screens.

After the UV is processed and accepted in FFIS, the transaction updates the following tables:

- Voucher Header Inquiry and Voucher Line Inquiry Tables (PVHT, PVLT)
- Voucher Holdback Inquiry Table (PVCH)
- Unpaid Voucher Inquiry Table (UPVT)
- Voucher Tracking Inquiry Table (VCTI)
- Treasury Schedule Control Header and Treasury Schedule Control Line Tables (TSCH, TSCL)
- Payment Voucher Line-Disb Document Cross Reference Inquiry Table (VXDD)
- Requisition Header Inquiry and Requisition Accounting Line Inquiry Tables (REQH, REQL)
- Orders Header Inquiry and Purchase Order Accounting Line Inquiry Tables (OBLH, OBLL)
- Budget Execution tables (ALOC, ALLT, SASP)
- General Ledger Balance Inquiry Table (GLBL)
- Document Cross Reference Inquiry Table (DXRF)

To access the UV through the Document Suspense File, see **Part 2**, **Using The Document Suspense File**.

The fields that are populated on the UV through the interface process are listed below:

Command Fields

[1] **DocID** *(alphanumeric field, max of 15 positions)*. Displays the transaction code (***UV***), the secl code (i.e., the 2-position division code) and the document number (*max. of 11 positions*).

```
COMMND: NEW              DOCID: UV  [1]                        XX/XX/XX 16:18:46
STATUS:                  BATID:                  SEC2:
H-
                              PAYMENT VOUCHER DOCUMENT

   PV DATE:   [2]         ACCTG PD:   [3]      BUDGET FY:        FUND:
      ACTION:             TRANS TYPE:     PROMPT PAY TYPE:     PV TYPE:
    SCHED PYMT DATE: [4]       DESCR: [5]              D.O:      FA IND:
          REF DOC #:                                     ACCP/DEL DATE:
       VENDOR INV #:                    INV DATE:            LOG DATE:
    FY:      SCHEDULE CAT:          SCHEDULE TYP:     SCHEDULE NUMBER:
    PAYMENT CAT:     OFFSET ELIGIBILITY: [6]
    VENDOR CODE: [7]                              DOCUMENT TOTAL:  [8]
           NAME: [9]                                 AGREEMENT #:
       ADDRESS1:                                    HOLDBACK TOT:
              2:                                  PMT SEQUENCE #:
              3:                                      INT REASON:
     CHECK TYPE:     AGENCY HEAD APPROVAL:    DISC LOST REASON:
     DISCOUNT %:                 / AMOUNT:                DAYS:
     DISCOUNT %:                 / AMOUNT:                DAYS:
     DISCOUNT %:                 / AMOUNT:                DAYS:
    COMMENTS TO PRINT:
```

Figure 4:64. UTVN Accrual Document (UV) header fields (Payment Voucher Document)

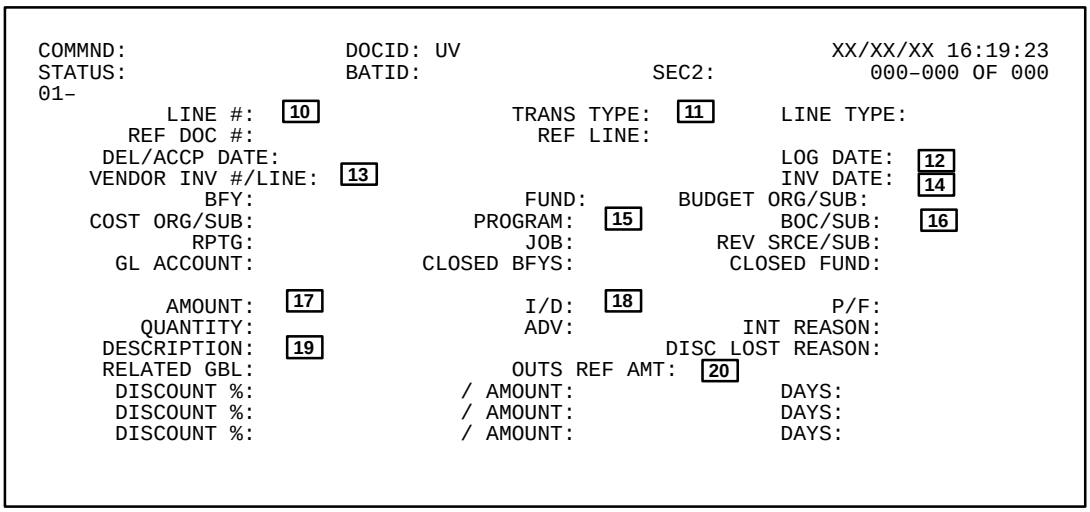

Figure 4:65. UTVN Accrual Document (UV) line fields (Payment Voucher Document)

Header Fields

2 **PV Date** *(numeric field, 6 positions).* Displays the date (*mmddyy*) of the document.

3 **Acctg Pd** *(numeric field, 4 positions).* Displays the accounting period date (*mmyy)*. This field is inferred from the document date in the CLDT.Note: The Acctg Pd refers to the fiscal month and year, e.g., November 2000 is 02 01. You cannot enter a future accounting period.

4 **Sched Pymt Date** *(numeric field, 6 positions).* Displays the date (*mmddyy*) selected by the automated disbursements process.

5 **Descr** *(alphanumeric field, max. of 12 positions).* Displays notes about this voucher.

6 **Offset Eligibility** *(alpha field, 1 position).* Displays the offset eligibility for a vendor.

7 **Vendor Code** *(alphanumeric field, max. of 11 positions).* Displays the vendor code

8 **Document Total** (*numeric field, max. of 15 positions*). Displays the document total. This field is system generated and is calculated by the inteface program as the unsigend sum of all line.

9 **Name** *(alphanumeric field, max. of 30 positions).* Displays the vendor's name.

Line Fields

10 **Line #** *(numeric field, 3 positions).*This field is system generated by the inteface program where the first line is assigned ***001***.

11 **Trans Type** *(alphanumeric field, 2 positions).* Displays the transaction type.

12 **Log Date** *(numeric field, 6 positions).* Displays the log date (*mmddyy*).

13 **Vendor Inv #/Line** *(numeric field, max. of 13 positions).* Displays the vendor invoice document number and line number.

14 **Inv. Date** *(numeric field, 6 positions).* Displays the invoice date (*mmddyy*).

15 **Program** *(alphanumeric field, 9 positions*). Displays the 9-position ACCS code. It is derived from the Accounting Structure Code Cross-Reference Table (ACXT).

16 **BOC/Sub** *(numeric field, 4 positions*). Displays the budget object class.

17 **Amount** *(numeric field, max. of 15 positions).*Displays the line amount.

18 **I/D** *(alpha field, 1 position).*Displays the increase (***I***) or decrease (***D***) amount indicator.

19 **Description** *(alphanumeric field, max. of 30 positions).* Displays the description.

20 **Outs Ref Amt** (*numeric field, max. of 15 positions*). Displays the outstanding reference amount.

TELE Standard Voucher Document (SE)

The SE is generated by the Telephone Vendors System (TELE) interface to FFIS. The SE is used to record end-of-month accruals (i.e., accrued expenditures) and automatically reverse at the beginning of the next month.

Each generated SE consists of a header record and one or more lines. The first document line records the accrual and the second backs out the commitment, if any, for the amount of the accrual.

The SE is a clone of the baseline SV. **Figure 4:66** and **Figure 4:67** show the SE header and line screens.

After the SE is processed and accepted in FFIS, the transaction updates the following tables:

- Journal Voucher and Standard Journal Inquiry Table (JVLT)
- Self-Reversing Journal Voucher Inquiry Table (RVJV)
- Budget Execution tables (APPR, APOR, FAPP, FAPR, FALC, FALT, ALOC, ALLT, SASP)
- Document Cross Reference Inquiry Table (DXRF)

To access the SE through the Document Suspense File, see **Part 2, Using The Document Suspense File**.

The fields that are populated on the SE through the interface process are listed below:

```
COMMND:                  DOCID: SE [1]                          XX/XX/XX 13:45:00
STATUS:                  BATID:                  SEC2:
H-
                                STANDARD VOUCHER DOCUMENT

                SV DATE: [2]                        ACCOUNTING PERIOD: [3]
                 ACTION:    EXPENSE(E), REVENUE(R), GL(G), BUDGET(B):
             BUDGET FYS:                                          FUND:
        REVERSAL PERIOD: [4]
                COMMENT:                    BUDGET OVERRIDE IND:
           REF TRANS ID:

         DOCUMENT TOTAL: [5]

            DESCRIPTION:
```

Figure 4:66. TELE Standard Voucher Document (SE) header fields (Standard Voucher Document)

```
COMMND:                  DOCID: SE                              XX/XX/XX 10:21:07
STATUS:                  BATID:                  SEC2:             000-000 OF 000
01-
       LINE NUMBER: [6]              TRANS TYPE: [7]     EXP/REV/GL/BUD: [8]
        BUDGET FYS: [9]                    FUND: [10]           DIVISION:
    BUDGET ORG/SUB: [11]            COST ORG/SUB:                   PGM: [12]
    BOC/REV SOURCE: [13]     SUB BOC/SUB SRCE:     JOB:               RPTG: [14]
       CLOSED BFYS:              CLOSED FUND:
    VENDOR: [15]          NAME: [16]                            QUANT:
    SCHD FISC YR:       SCHD CAT:      SCHD TYP:      SCHD NO:
    D.O.:           GUEST SYMBOL:
    REF TRAN ID:                     DOC TYP:   AGREE #:                 ADV:
    INVOICE NO:              INVOICE DATE:          INVOICE LINE:
    AMOUNT: [17]              INC/DEC IND: [18] ACC DATE:             OBL FY:
    DESCRIPTION: [19]                                  TREAS NO:
```

Figure 4:67. TELE Standard Voucher Document (SE) line fields (Standard Voucher Document)

Command Fields

[1] **DocID** *(alphanumeric field, max. of 15 positions).* Displays the transaction code (***SE***), the sec1 code (i.e., the 2 position division code) and the document number (*max. of 11 positions)*. The document number is the register schedule number in **positions 1–6**; **position 7** is set to *A*; and, **positions 8–11** are a sequential number derived from the ADNT.

Header Fields

[2] **SV Date** (*numeric field, 6 positions).* Displays the date (*mmddyy*) of the document. This field is system generated with data inferred from the date parameter file, if specified, or from the DATE.

[3] **Accounting Period** *(numeric field, 4 positions).* Displays the open accounting period date (*mmyy).* This field is system generated with data inferred from the APCT. Note: The Accounting Period refers to the fiscal month and year, e.g., November 2000 is 02 01.

[4] **Reversal Period** *(numeric field, 4 positions).* Displays the fiscal month and year (*mmyy).*

[5] **Document Total** *(numeric field, max. of 15 positions).* Displays the document total. This field is system generated and is calculated by the interface program as the unsigned sum of all lines.

Line Fields

[6] **Line Num** *(numeric field, 3 positions).* This field is system generated by the interface program where the first line is assigned *001*.

[7] **Trans Type** *(alphanumeric field, 2 positions).* Displays the transaction type. This field is derived from the GLXT.

[8] **Exp/Rev/GL/Bud** *(alpha field, 1 position).* Displays the expense, revenue, general ledger, or budget indictor. This field is system generated with data inferred from the GLXT.

[9] **Budget FYs** *(numeric field, 2 positions).* Displays the budget fiscal year which is derived from the Default Values Reference Table (DVAL).

[10] **Fund** *(numeric field, max. of 3 positions).* Displays the fund which is derived from the DVAL.

[11] **Budget Org/Sub** *(numeric field, 5 positions).* Displays the budget organization. RD does not use the Budget Sub field.

[12] **Pgm** *(required, alphanumeric field; 9 positions).* Key in the 9-position ACCS code. Reference the PGMT for code verification

[13] **BOC/Rev Source** *(numeric field, 4 positions).* Displays the budget object class or revenue source code.

[14] **Rptg** *(alphanumeric field; 2 positions).* Displays the reporting category which is derived from the DVAL and contains the 2-position special purpose code.

[15] **Vendor** *(alphanumeric field, max. of 11 positions).* Displays the vendor code. This field is derived from the VCXT.

[16] **Name** *(alphanumeric field, max. of 30 positions).* The system defaults to the name and address for the specified vendor.

[17] **Amount** *(numeric field, max. of 15 positions).* Displays the line amount. This field is derived from the object class amount.

[18] **Inc/Dec Ind** *(alpha field, 1 position).* Displays the increase (***I***) or decrease (***D***) amount indicator.

[19] **Description** *(alphanumeric field, max. of 30 positions).* Displays the telephone account number, agency number, telephone type service, and batch number.

TELE Payment Voucher Document (VT)

The VT is generated by the Telephone Vendors System (TELE) interface to FFIS. The VT is used to record authorization of payment to a vendor for goods and/or services accepted and invoiced.

Each generated VT consists of a header record and one or more lines. VT headers represent charges billed to an account number for a specific invoice and vendor, while each line represents individual invoice lines entered for a specific accounting classification and object class.

The TELE interface generates the VT for the AD–474, Transmittal–Telephone and Utilities and vendor invoices.

The VT is a clone of the baseline Payment Voucher Document (PV). **Figure 4:68** and **Figure 4:69** show the VT header and line screens.

After the VT is processed and accepted in FFIS, the transaction updates the following tables:

- Voucher Header Inquiry and Voucher Line Inquiry Tables (PVHT, PVLT)
- Treasury Schedule Control Header and Treasury Schedule Control Line Inquiry Tables (TSCH, TSCL). These tables are updated only if manual schedule numbers are used.
- Orders Header Inquiry and Purchase Order Accounting Line Inquiry Tables (OBLH, OBLL)
- Budget Execution tables (APPR, APOR, FAPP, FAPR, FALC, FALT, ALOC, ALLT, SASP). The FALC and FALT are updated by the offline program, XXXBEFY.
- General Ledger Balance Inquiry Table (GLBL)

```
COMMND:                 DOCID: VT   [1]                        XX/XX/XX 16:18:46
STATUS:                 BATID:                  SEC2:
H-
                            PAYMENT VOUCHER DOCUMENT

   PV DATE: [2]          ACCTG PD:[3]       BUDGET FY:        FUND:
      ACTION:            TRANS TYPE:    PROMPT PAY TYPE:     PV TYPE:
    SCHED PYMT DATE: [4]      DESCR: [5]            D.O:      FA IND:
          REF DOC #:                                  ACCP/DEL DATE:
       VENDOR INV #:                   INV DATE:            LOG DATE:
    FY:      SCHEDULE CAT: [6]      SCHEDULE TYP:     SCHEDULE NUMBER:
    VENDOR CODE: [7]                             DOCUMENT TOTAL: [8]
           NAME: [9]                                AGREEMENT #:
       ADDRESS1:                                   HOLDBACK TOT:
              2:                                 PMT SEQUENCE #:
              3:                                     INT REASON:
     CHECK TYPE:     AGENCY HEAD APPROVAL:    DISC LOST REASON:
     DISCOUNT %:                 / AMOUNT:                DAYS:
     DISCOUNT %:                 / AMOUNT:                DAYS:
     DISCOUNT %:                 / AMOUNT:                DAYS:
    COMMENTS TO PRINT:
```

Figure 4:68. TELE Payment Voucher Document (VT) header fields (Payment Voucher Document)

```
COMMND:                 DOCID: VT                              XX/XX/XX 16:19:23
STATUS:                 BATID:                  SEC2:              000-000 OF 000
01-
          LINE #:        [10]          TRANS TYPE:   [11]     LINE TYPE:
       REF DOC #:        [12]            REF LINE:   [13] DEL/ACCP DATE:
    VENDOR INV #/LINE:   [14]            INV DATE:   [15]      LOG DATE: [16]

             BFY:        [17]          FUND:     [18]  BUDGET ORG/SUB:   [19]
    COST ORG/SUB:                  PROGRAM:     [20]          BOC/SUB:   [21]
            RPTG:        [22]           JOB:            REV SRCE/SUB:
      GL ACCOUNT:              CLOSED BFYS:             CLOSED FUND:

          AMOUNT:        [23]           I/D:   [24]               P/F:   [25]
        QUANTITY:                        ADV:              INT REASON:
     DESCRIPTION:        [26]                        DISC LOST REASON:
     RELATED GBL:                     OUTS REF AMT: [27]
      DISCOUNT %:                 / AMOUNT:                DAYS:
      DISCOUNT %:                 / AMOUNT:                DAYS:
      DISCOUNT %:                 / AMOUNT:                DAYS:
```

Figure 4:69. TELE Payment Voucher Document (VT) line fields (Payment Voucher Document)

- Cross-Reference tables (DXRF, VXRF, GIDT)

To access the VT through the Document Suspense File, see **Part 2, Using The Document Suspense File**.

The fields that are populated on the VT through the interface process are listed below:

Command Fields

[1] **DocID** *(alphanumeric field, max. of 15 positions).* Displays the transaction code (***VT***), the sec1 code (i.e., the 2 position division code) and the document number (*max. of 11 positions).* **Positions 1–6** represent the register schedule number; **position 7** is set to ***P*** by the interface; and **positions 8–11** represent a sequential number derived from the ADNT.

Header Fields

[2] **PV Date** (*numeric field, 6 positions).* Displays the date (*mmddyy*) of the document. This field is system generated with data inferred from the date parameter file, if specified, or from the DATE.

[3] **Acctg Pd** *(numeric field, 4 positions).* Displays the open accounting period date (*mmyy).* This field is system generated with data inferred from the APCT. Note: The Acctg Pd refers to the fiscal month and year, e.g., November 2000 is 02 01.

[4] **Sched Pymt Date** *(numeric field, 6 positions).* Displays the invoice due date (*mmyy).* Note: TELE vendors are not classified as Prompt Pay vendors, the scheduled payment date is the due date

[5] **Descr** *(numeric field, 10 positions).* Displays the telephone account number.

[6] **Schedule Cat** *(alpha field, 1 position).* Displays the schedule category. The system generates ***T*** for an automated Treasury schedule, ***M*** for a manual schedule, or, ***A*** for an ACH tape**.**

[7] **Vendor Code** *(alphanumeric field, max. of 11 positions).* Displays the vendor code. This field is derived from the VCXT.

[8] **Document Total** *(numeric field, max. of 15 positions).* Displays the unsigned net total of all accounting lines.

[9] **Name, Address 1, 2, 3** *(alphanumeric field, max. of 30 positions per line).* The system defaults to the name and address for the specified vendor code.

Line Fields

[10] **Line #** *(numeric field, 3 positions).* This field is system generated by the interface program where the first line is assigned ***001***.

[11] **Trans Type** *(alphanumeric field, 2 positions).* Displays the transaction type. This field is derived from the GLXT.

[12] **Ref Doc #** *(alphanumeric field, max. of 13 positions).* Displays the reference document transaction code and number.

[13] **Ref Line** *(alphanumeric field, max. of 3 positions).* Displays the reference transaction line.

[14] **Vendor Inv #/Line** *(alphanumeric field, max. of 11 positions).* Displays the telephone account number.

[15] **Inv Date** *(numeric field, 6 positions).* Displays the vendor date (*mmddyy*) from the vendor's invoice.

[16] **Log Date** *(numeric field, 6 positions).* Displays the invoice log date (*mmddyy*).

[17] **BFY** *(numeric field, 2 positions).* Displays the beginning and ending budget fiscal year.

[18] **Fund** *(alphanumeric field, max. of 3 positions).* Displays the fund code.

[19] **Budget Org/Sub** *(numeric field, 5 positions).* Displays the organization. RD does not use the Budget Sub field.

[20] **Program** *(alphanumeric field, max. of 9 positions).* Displays the 9-position ACCS program code. This field is derived from the ACXT.

[21] **BOC/Sub** *(numeric field, 4 positions).* Displays the budget object class.

[22] **Rptg** *(numeric field, 2 positions).* Displays the 2-position special purpose code.

[23] **Amount** *(numeric field, max. of 15 positions).* Displays the line amount.

[24] **I/D** *(alpha field, 1 position).* Displays the increase (***I***) or decrease (***D***) amount indicator.

[25] **P/F** *(alpha field, 1 position).* Displays the partial (***P***) or final (***F***) indicator.

[26] **Description** *(alphanumeric field, max. of 30 positions).* Displays the telephone account number, agency number, telephone type service, and batch number.

[27] **Outs Ref Amt** *(numeric field, max. of 15 positions).* Displays the outstanding obligation amount.

PCMS Payment Voucher Document (V2)

The V2 is generated by the Purchase Card Management System (PCMS) interface to FFIS. The V2 is used to post an expenditure and initiate a disbursement.

The PCMS interface generates the V2 for electronic invoices. The V2 is a clone of the baseline PV. **Figure 4:70** and **Figure 4:71** show the V2 header and line screens.

Note: PCMS cardholders must reconcile all transactions subsequent to working V2, V5, and V8 rejects. For additional information on Card Transactions, see Title VI, Systems Access Manual, Chapter 7, Procurement and Other Payments, Section 14, Purchase Card Management System(PCMS). After transactions have been validated, the corresponding commitments (RQ) must be canceled or decreased for cardholder commitments to avoid duplicate obligations.

After the V2 is processed and accepted in FFIS, the transaction updates the following tables:

- Voucher Header Inquiry and Voucher Line Inquiry Tables (PVHT, PVLT)
- Generic Schedule Control Header Inquiry Table (GSCH)
- Voucher Tracking Inquiry Table (VCTI)
- Treasury Schedule Control Header and Treasury Schedule Control Line Inquiry Tables (TSCH, TSCL)

```
COMMND:                DOCID: V2 [1]                        XX/XX/XX 12:36:58
STATUS:                BATID:                 SEC2:
H-
                              PAYMENT VOUCHER DOCUMENT

     PV DATE: [2]          ACCTG PD: [3]       BUDGET FY:         FUND:
      ACTION: [4]        TRANS TYPE: [5] PROMPT PAY TYPE:     PV TYPE:
    SCHED PYMT DATE: [6]       DESCR:              D.O:       FA IND:
          REF DOC #:                                    ACCP/DEL DATE:
       VENDOR INV #: [7]                INV DATE: [8]        LOG DATE:
    FY:      SCHEDULE CAT: [9]      SCHEDULE TYP:     SCHEDULE NUMBER:
    VENDOR CODE: [10]                                DOCUMENT TOTAL: [11]
           NAME: [12]                                   AGREEMENT #:
       ADDRESS1:                                      HOLDBACK TOT:
              2:                                     PMT SEQUENCE #:
              3:                                        INT REASON:
     CHECK TYPE:     AGENCY HEAD APPROVAL:    DISC LOST REASON:
     DISCOUNT %:                / AMOUNT:              DAYS:
     DISCOUNT %:                / AMOUNT:              DAYS:
     DISCOUNT %:                / AMOUNT:              DAYS:
    COMMENTS TO PRINT: [13]
```

Figure 4:70. PCMS Payment Voucher Document (V2) header fields (Payment Voucher Document)

```
COMMND:                DOCID: V2                            XX/XX/XX 12:37:17
STATUS:                BATID:                 SEC2:            001-001 OF 004
01-
          LINE #: [14]              TRANS TYPE:          LINE TYPE:
       REF DOC #:                     REF LINE:      DEL/ACCP DATE:
    VENDOR INV #/LINE:                INV DATE:           LOG DATE:

            BFY: [15]                 FUND: [16]     BUDGET ORG/SUB: [17]
    COST ORG/SUB:                  PROGRAM: [18]           BOC/SUB:
           RPTG:                       JOB:           REV SRCE/SUB:
      GL ACCOUNT:               CLOSED BFYS:            CLOSED FUND:

          AMOUNT: [19]                I/D:                    P/F:
        QUANTITY:                     ADV:              INT REASON:
     DESCRIPTION: [20]                                DISC LOST REASON:
     RELATED GBL:                   OUTS REF AMT: [21]
      DISCOUNT %:                / AMOUNT:              DAYS:
      DISCOUNT %:                / AMOUNT:              DAYS:
      DISCOUNT %:                / AMOUNT:              DAYS:
```

Figure 4:71. PCMS Payment Voucher Document (V2) line fields (Payment Voucher Document)

- Orders Header Inquiry and Purchase Order Accounting Line Inquiry Tables (OBLH, OBLL)
- Requisition Header Inquiry and Requisition Accounting Line Inquiry Tables (REQH, REQL)
- Budget Execution tables (ALOC, ALLT, SASP)
- General Ledger Balance Inquiry Table (GLBL)

To access the V2 through the Document Suspense File, see **Part 2, Using The Document Suspense File**.

The fields that are populated on the V2 through the interface process are listed below:

Command Fields

[1] **DocID** *(alphanumeric field, max. of 15 positions).* Displays the transaction code (***V2***), the sec1 code (i.e., the 2 position division code) and the document number (*max. of 11 positions)*. The document number is the last 10 positions of the PCMS Invoice Number left justified. The remainder of the document number is inferred from the ACXT.

Header Fields

[2] **PV Date** (*numeric field, 6 positions).* Displays the date (*mmddyy*) of the document. This field is system generated with data inferred from Date Parameter File or the DATE.

[3] **Acctg Pd** *(numeric field, 4 positions).* Displays the accounting period associated with the invoice date (*mmyy).*This field is system generated with data inferred from the APCT. Note: The Acctg Pd refers to the fiscal month and year.

[4] **Action** *(alpha field, 1 position)*. Displays ***E***.

[5] **Trans Type** *(numeric field, 2 positions)*. Displays ***01***.

[6] **Sched Pymt Date** *(numeric field, 6 positions)*. Displays the current date.

[7] **Vendor Inv #** *(alphanumeric field, 11 positions)*. Displays the last 11 positions of the bank's billing account number.

[8] **Inv Date** *(numeric field, 6 positions)*. Displays the invoice date.

[9] **Schedule Cat** *(alpha field, 1 position).* Displays the schedule category code.

[10] **Vendor Code** *(alphanumeric field, max. of 11 positions).* Displays the TIN of the bank, followed by ***A***.

[11] **Document Total** *(numeric field, max. of 15 positions).* Displays the unsigned net total of all accounting lines (i.e., invoice amount). this amount cannot be changed from the original amount sent to FFIS by PCMS.

[12] **Name, Address 1, 2, 3** *(alphanumeric field, max. of 30 positions per line).* Displays the name and address inferred from the VEND.

[13] **Comments To Print** *(alphanumeric field, max. of 40 positions)*. Displays the following information: **positions 1–12** represent the ***BILL ACCT#***; **positions 13–28** represent the billing account number; and the remaining positions are blank.

Line Fields

[14] **Line #** *(numeric field, 3 positions).* Displays a sequential number generated by PCMS starting at ***001***.

[15] **BFY** *(numeric field, 2 positions)*. Displays the budget fiscal year.

[16] **Fund** *(alphanumeric field, max. of 3 positions).* Displays the fund.

[17] **Budget Org/Sub** *(alphanumeric field, 5 positions)*. Displays the budget organization code. RD does not used the Budget Sub field.

[18] **Program** *(default, numeric field; 9 positions).* This field displays the 9-position ACCS code. It is derived from the ACXT.

[19] **Amount** *(numeric field, max. of 15 positions).* Displays the agency portion of the PCMS invoice. This amount cannot be changed from the original amount sent to FFIS by PCMS.

[20] **Description** *(alphanumeric field, max. of 30 positions)*. Displays the following information: **positions 1–14** represent the cardholder name; **position 15** is a blank space; and **positions 16–30** represent the merchant name.

[21] **Outs Ref Amt** *(numeric field, max. of 15 positions)*. This field is calculated by the document processor.

PCMS Standard Voucher Document (V5)

The V5 is generated by the Purchase Card Management System (PCMS) interface to FFIS. The V5 is used to record post payment adjustments by the PCMS.

Each V5 generated to record a post-payment modification consists of a header and at least two lines. The total document amount on the header will always be zero. The first line reverses the original expenditure and the second line posts the modified expenditure. There is more than one increase line if the re-distribution affects more than one accounting distribution.

The V5 is a clone of the baseline Standard Voucher Document (SV). **Figure 4:72** and **Figure 4:73** show the V5 header and line screens.

After the V5 is processed and accepted in FFIS, the transaction will update the following tables:

- Journal Voucher and Standard Journal Inquiry Table (JVLT)
- Generic Schedule Control Line Inquiry Table (GSCL)
- Budget Execution tables (ALOC, ALLT, SASP)
- General Ledger Balance Inquiry Table (GLBL)

To access the V5 through the Document Suspense File, see **Part 2,** Using The Document Suspense File.

The fields that are populated on the V5 through the interface process are listed below:

Command Fields

[1] **DocID** *(alphanumeric field, max. of 15 positions).* Displays the transaction code (***V5***), the sec1 code (i.e., the 2 position division code) and the document number (*max. of 11 positions).* The document number is sequentially assigned by the document processor.

Header Fields

[2] **Action** *(alpha field, 1 position).* Displays ***E***.

[3] **Expense(E), Revenue(R), GL(G), Budget(B)** *(alpha field, 1 position).* Displays ***E*** (expense).

[4] **Comment** *(alphanumeric field, 12 positions).* Displays the following information: **positions 1–4** represent the last four positions of the CT-Account Number; **positions 5–6** represent blank spaces; and **positions 7–12** represent the purchase date (*mmddyy*).

[5] **Document Total** *(numeric field, max. of 15 positions).* Displays zero.

Line Fields

[6] **Line Number** *(numeric field, 3 positions).* Displays a sequential number generated by the interface starting at ***001***.

[7] **Trans Type** *(numeric field, 2 positions).* Displays ***01***.

[8] **Budget FYs** *(numeric field, 2 positions).* Displays the budget fiscal year.

[9] **Fund** *(alphanumeric field, max. of 3 positions).* Displays the fund.

[10] **Division** *(alphanumeric field, 2 positions).* Displays the division.

[11] **Budget Org/Sub** *(alphanumeric field, 5 positions).* Displays the budget organization code. RD does not used the Budget Sub field.

```
COMMND: NEW              DOCID: V5 [1]                          XX/XX/XX 13:45:00
STATUS:                  BATID:                  SEC2:
H-
                                STANDARD VOUCHER DOCUMENT

                SV DATE:                                ACCOUNTING PERIOD:
                  ACTION: [2] EXPENSE(E), REVENUE(R), GL(G), BUDGET(B): [3]
            BUDGET FYS:                                            FUND:
         REVERSAL PERIOD:
                COMMENT: [4]                BUDGET OVERRIDE IND:
           REF TRANS ID:

          DOCUMENT TOTAL: [5]

             DESCRIPTION:
```

Figure 4:72. PCMS Standard Voucher Document (V5) header fields (Standard Voucher Document)

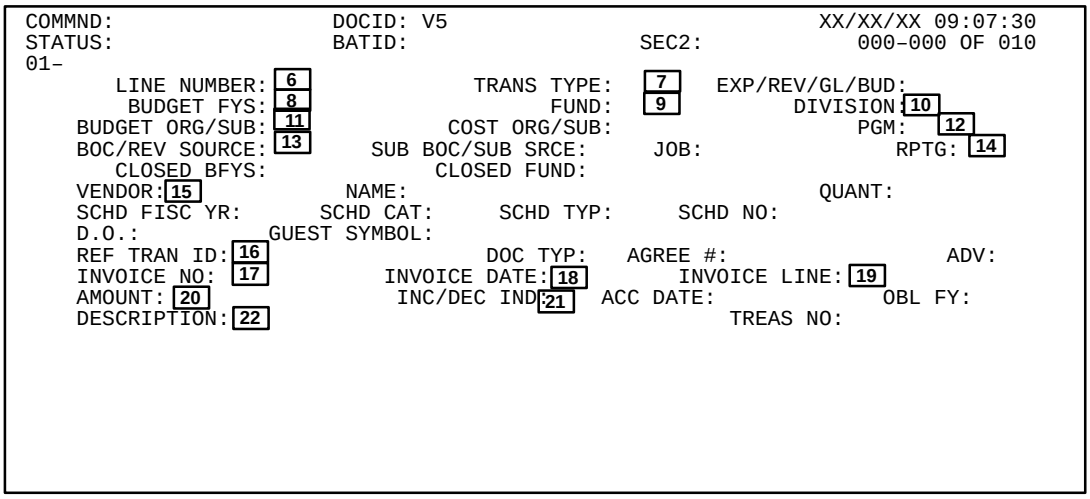

Figure 4:73. PCMS Standard Voucher Document (V5) line fields (Standard Voucher Document)

Line Fields *(cont'd)*

12 **Pgm** *(alphanumeric field, max. of 9 positions).* Displays the 9-digit ACCS code. This field is derived from the ACXT.

13 **BOC/Rev Source** *(alphanumeric field, max. of 4 positions)*. Displays the object class code.

14 **Rptg** *(alphanumeric field, 2 positions).* Displays the reporting category code which contains the 2-digit special purpose code.

15 **Vendor** *(alphanumeric field, max. of 11 positions).* Displays the TIN of the bank, followed by ***A***.

16 **Ref Tran ID** *(alphanumeric field, max. of 16 positions)*. For line(s) to decrease original expenditure(s), displays ***V4***, followed by the Trans-Sequence Number, and the V4 line number. For line(s) to record the new expenditure(s), displays blank spaces.

17 **Invoice No** *(numeric field, max. of 11 positions)*. Displays the last 10 positions of the invoice number left justified.

18 **Invoice Date** *(numeric field, 6 positions)*. Displays the invoice date.

19 **Invoice Line** *(numeric field, 3 positions)*. Displays ***001***.

20 **Amount** *(numeric field, max. of 15 positions).* Displays the distribution amount. This amount cannot be changed from the original amount sent to FFIS by PCMS.

21 **Inc/Dec Ind** *(alpha field, 1 position)*. Displays ***I*** (increase) if recording a modified expenditure; or ***D*** (decrease) if recording a post-payment reversal of the original expenditure.

22 **Description** (*alphanumeric field, max. of 30 positions*). Displays the following information: **positions 1–14** represent the cardholder name; **position 15** is a blank space; and **positions 16–30** represent the merchant name.

PCMS Payment Voucher Document (V8)

The V8 is generated by the Purchase Card Management System (PCMS) interface to FFIS. The V8 is used to replenish the Agency's clearing account (line 001 of the document) by charging the agency's accounting (lines 002–999 of the document). The PCMS interface generates the V8.

The V8 is a clone of the baseline SV. **Figure 4:70** and **Figure 4:71** show the V8 header and line screens.

After the V8 is processed and accepted in FFIS, the transaction updates the following tables:

- Generic Schedule Control Header Inquiry Table (GSCH)
- Generic Schedule Control Line Inquiry Table (GSCL)
- Journal Voucher and Standard Journal Inquiry Table (JVLT)

To access the V8 through the Document Suspense File, see **Part 2,** **Using The Document Suspense File**.

The fields that are populated on the V8 through the interface process are listed below:

Command Fields

[1] **DocID** *(alphanumeric field, max. of 15 positions).* Displays the transaction code (***V8***), the sec1 code (i.e., the 2 position division code) and the document number (*max. of 11 positions)*. The document number is sequentially assigned by the document processor.

```
COMMND: NEW              DOCID: V8 [1]                          XX/XX/XX 13:45:00
STATUS:                  BATID:                  SEC2:
H-
                                STANDARD VOUCHER DOCUMENT

                SV DATE:                                  ACCOUNTING PERIOD:
                 ACTION:[2]  EXPENSE(E), REVENUE(R), GL(G), BUDGET(B): [3]
             BUDGET FYS:                                          FUND:
        REVERSAL PERIOD:
                COMMENT: [4]                BUDGET OVERRIDE IND:
           REF TRANS ID:

         DOCUMENT TOTAL: [5]

            DESCRIPTION:
```

Figure 4:74. PCMS Standard Voucher Document (V8) header fields (Standard Voucher Document)

```
COMMND:                  DOCID: V8                              XX/XX/XX 09:07:30
STATUS:                  BATID:                  SEC2:             000-000 OF 010
01-
       LINE NUMBER: [6]              TRANS TYPE:  [7]   EXP/REV/GL/BUD:
        BUDGET FYS: [8]                      FUND:  [9]          DIVISION:[10]
    BUDGET ORG/SUB: [11]            COST ORG/SUB:                    PGM:  [12]
    BOC/REV SOURCE: [13]     SUB BOC/SUB SRCE:     JOB:                RPTG: [14]
       CLOSED BFYS:              CLOSED FUND:
    VENDOR:[15]              NAME:                                   QUANT:
    SCHD FISC YR:       SCHD CAT:      SCHD TYP:      SCHD NO:
    D.O.:            GUEST SYMBOL:
    REF TRAN ID: [16]                    DOC TYP:   AGREE #:                ADV:
    INVOICE NO:  [17]          INVOICE DATE:[18]        INVOICE LINE: [19]
    AMOUNT: [20]                INC/DEC IND:[21]  ACC DATE:            OBL FY:
    DESCRIPTION: [22]                                    TREAS NO:
```

Figure 4:75. PCMS Standard Voucher Document (V8) line fields (Standard Voucher Document)

Header Fields

[2] **Action** *(alpha field, 1 position).* Displays ***E***.

[3] **Expense(E), Revenue(R), GL(G), Budget(B)** *(alpha field, 1 position)*. Displays ***G*** for line 001. Displays ***E*** for lines 002–999.

[4] **Comment** *(alphanumeric field, 12 positions)*. Displays the following information: **positions 1–4** represent the last four positions of the CT-Account Number; **positions 5–6** represent blank spaces; and **positions 7–12** represent the purchase date (*mmddyy*).

[5] **Document Total** *(numeric field, max. of 15 positions)*. Displays the unsigned net total of all accounting lines. This field will always be zero.

Line Fields

[6] **Line Number** *(numeric field, 3 positions).* Displays a sequential number generated by the interface starting at ***001***.

[7] **Trans Type** *(numeric field, 2 positions).* Displays ***01*** for line 001. Displays ***02*** for lines 002–999.

[8] **Budget FYs** *(numeric field, 2 positions).* Displays the budget fiscal year.

[9] **Fund** *(numeric field, max. of 3 positions)*. Displays the fund.

[10] **Division** *(alphanumeric field, 2 positions)*. Displays the division.

[11] **Budget Org/Sub** *(alphanumeric field, 5 positions)*. Displays the budget organization code. RD does not use the Budget Sub field.

[12] **Pgm** *(alphanumeric field, max. of 9 positions).* Displays the 9-position ACCS code.

[13] **BOC/Rev Source** *(numeric field, max. of 4 positions)*. Displays the object class code.

[14] **Rptg** *(alphanumeric field, 2 positions).* Displays the 2-digit special purpose code.

[15] **Vendor** *(alphanumeric field, max. of 11 positions).* Displays the TIN of the bank, followed by ***A***.

[16] **Ref Tran ID** *(alphanumeric field, max. of 16 positions)*. Displays ***V2*** followed by the one character bank identifier followed by the last 10 characters of the PCMS invoice number, followed by 001.

[17] **Invoice No** *(numeric field, max. of 11 positions).* Displays the last 10 positions of the invoice number left justified.

[18] **Invoice Date** *(numeric field, 6 positions)*. Displays the invoice date.

[19] **Invoice Line** *(numeric field, 3 positions)*. Displays ***001***.

[20] **Amount** *(numeric field, max. of 15 positions).* For line 001, the total amount of lines 002–999 is displayed. For line 002–99, the amount is derived from the distribution amount in TAT in PCMS. This amount cannot be changed from the original amount sent to FFIS by PCMS.

[21] **Inc/Dec Ind** *(alpha field, 1 position).* Displays ***I*** for debit or ***D*** for credit.

[22] **Description** (*alphanumeric field, max. of 30 positions*). Derived from CCT in PCMS.

PCMS Standard Voucher Document (V6)

The V6 document **Figure 4:76** and **Figure 4:77**, is used to correct any change in the FFIS overall transaction amount from the amount sent by PCMS. This situation should rarely occur because, procedurally, FFIS users are instructed to **never** modify transaction dollar amounts on a V2, V8, or V5 document. The V6 document must be manually entered (direct entry) and can only be entered by the RD Functional Administrator in coordination with the PCMS Functional Administrator.

The first set of lines on the V6 document will reverse the impact of the original document accepted in FFIS. The second set of lines on the V6 document will post the correct dollar amount.

Before entering the V6 document, appropriate agency personnel must discuss the modification needed with appropriate PCMS personnel to ensure the correct dollar amounts in both accounting systems.

Note: The overall total dollar amount on a rejected document on SUSF should never be changed.

```
COMMND: NEW             DOCID: V6                              XX/XX/XX 13:45:00
STATUS:                 BATID:                  SEC2:
H–
                              STANDARD VOUCHER DOCUMENT

                SV DATE:                             ACCOUNTING PERIOD:
                 ACTION:    EXPENSE(E), REVENUE(R), GL(G), BUDGET(B):
             BUDGET FYS:                                          FUND:
         REVERSAL PERIOD:
                COMMENT:                    BUDGET OVERRIDE IND:
           REF TRANS ID:

          DOCUMENT TOTAL:

              DESCRIPTION:
```

Figure 4:76. PCMS Standard Voucher Document (V6) header fields (Standard Voucher Document)

```
COMMND:                 DOCID: V6                              XX/XX/XX 09:07:30
STATUS:                 BATID:                  SEC2:             000–000 OF 010
01–
       LINE NUMBER:                TRANS TYPE:        EXP/REV/GL/BUD:
        BUDGET FYS:                      FUND:               DIVISION:
    BUDGET ORG/SUB:              COST ORG/SUB:                   PGM:
    BOC/REV SOURCE:         SUB BOC/SUB SRCE:     JOB:               RPTG:
       CLOSED BFYS:              CLOSED FUND:
    VENDOR:              NAME:                                  QUANT:
    SCHD FISC YR:      SCHD CAT:     SCHD TYP:     SCHD NO:
    D.O.:          GUEST SYMBOL:
    REF TRAN ID:                     DOC TYP:   AGREE #:                ADV:
    INVOICE NO:             INVOICE DATE:          INVOICE LINE:
    AMOUNT:                  INC/DEC IND:    ACC DATE:             OBL FY:
    DESCRIPTION:                                      TREAS NO:
```

Figure 4:77. PCMS Standard Voucher Document (V6) line fields (Standard Voucher Document)

PART 5.

ACCOUNTS RECEIVABLE

Accounts Receivable Overview **5:3**
Accounts Receivable Chains 5:3
Establishing Receivable 5:3
Document Referencing 5:4
System Checks 5:4

Accounts Receivable Documents **5:7**
ABCO Billing Document (A1) 5:8
ABCO Cash Receipt Documents (A2, A3, and WR) 5:11

Accounts Receivable Overview

RD Accounts Receivable transactions are processed by NFC Administrative Billings and Collections (ABCO) staff, which can be contacted at 504–255–6134. ABCO is used to support RD's Accounts Receivable needs. ABCO establishes receivables, based on receipt of the Form AD-673, Request to Bill, generates billing statements, manages aging activities, accrues interest and penalty charges, assesses administrative fees and processes collections. The ABCO interface to FFIS creates the Accounts Receivable documents which updates the available budget amount and posts to the General Ledger based on client-defined options.

The following list shows the primary types of accounting activities which result in the production of 420-character records within the "in-house" side of ABCO:

- Establishing "in-house" receivables
- Establishing receivables to offset travel advances
- Amending existing receivables
- Reclassifying receivables
- Assessing interest, administrative, and penalty charges
- Processing collections against existing receivables
- Processing voluntary collections
- Processing voluntary collections via Simplified Intragovernmental Billing and Collection System (SIBAC) for the Purchase Order System
- Processing checks returned due to insufficient funds (NSF)
- Processing NSF unapplied collections
- Recording sale of asset collections
- Processing collections for canceled checks
- Processing write-offs
- Establishing a receivable to record funds disbursed as a result of a recertified check
- Establishing the correct agency accounting to record funds disbursed as a result of a recertified check for a 1081 transfer
- Establishing the correct agency accounting for check recertification write-offs
- Issuing over–collection payments (refunds) for amounts greater that $1.00
- Processing over–collection payments (refunds) for amounts less than $1.00

Accounts Receivable Chains

In FFIS, an accounts receivable chain is a combination of accounting transactions that encompass one of the following accounting events: revenue recognition, balance sheet transfer, and expenditure refund. These accounting events are described below:

Revenue Recognition. Records earned revenue, interest, administrative charges, or penalty charges.

Balance Sheet Transfer. Records a transfer of funds from one balance sheet account to another.

Expenditure Refund. Decreases a previously recorded expenditure. Depending on the value of the Bill Doc Refund Exp Updt Budget flag in the System Control Options Table (SOPT), FFIS restores the funds to your budget at either the time of billing or receipt of cash.

Establishing Receivable

RD send the AD-673 to NFC to create a receivable. The amount of accounting and descriptive information that ABCO receives concerning receivables depends on the agency to which the debt is owed. To establish a receivable, ABCO must have, at a minimum, a Debtor ID, and amount owed, an accounting classification, an agency code, an object code, and a description of the purpose of the billing if the receivable is billed by ABCO. The AD-673 and all supporting documentation (e.g., AD-838, SF-182, etc.) should be sent to the Billings and Collections Branch of the United States Department of Agriculture (USDA), National Finance Center (NFC), P.O. Box 61765, New Orleans, LA 70161.

When billing another OPAC agency, refer to **Part 9**, **Appendix O, OPAC Agency Requirements**, for detailed information required on the AD-673 for the respective agency. When billing an agency not listed in the Appendix, contact the agency directly for billing data required. From OPAC transactions, RD must submit the reimbursing agency's Agency Location code (ALC).

To establish a receivable for a non-OPAC agency, RD will also prepare and send the AD-673 and supporting documentation to the Billings and Collections Branch address listed above. Upon receipt, NFC will generate an Office of Financial Management (OFM)/NFC-631, Bill for Collection, and send to the billed agency. For FSA county offices, NFC will send both an AD-631 and an SF-1081, Voucher and Schedule of Withdrawals and Credits. For the Department of Defense, NFC will send both an AD-631 and an SF-1080, Voucher for Transfer Between Appropriations and/or Funds. Upon receipt of the bill, the non-OPAC agency will send the payment directly to the NFC Lockbox identified on the form.

Trans Category	Baseline Trans Code	Interface Trans Code	Referencing	Batch Modification
Billing Document (BD)	BD	A1		Yes
Cash Receipt (CR)	CR	A2	A1	Yes
CR	CR	A3		Yes
CR	CR	WR	A1	Yes

Figure 5:1. Transaction Codes Generated By ABCO-FFIS Interface

ABCO generates a 420-character record for each separate line of accounting on the bill. The 420-character records currently generated by ABCO is divided into two input files; one file containing records bound for FFIS and another file containing all other records by a generic splitter program. After the splitter program has isolated the 420-character records bound for FFIS, the ABCO-FFIS Interface reads the 420-character records and creates the necessary functional documents to record the financial impact of the corresponding ABCO transactions in FFIS.

The FFIS Document ID for the interface-generated billing documents, cash receipt documents, and payment voucher documents are stored in the Generic Interface Document Cross-Reference Table (GIDT) for query purposes. The GIDT provides a link between receivables and their corresponding collections and identifies which document to modify when a receivable or collection amendment is processed by the interface. The interface-generated cash receipt documents reference billing documents by use of the GIDT when applicable.

The following table (**Figure 5:1**) lists the transaction codes generated by the ABCO-FFIS interface.

Note: Batch modification records changes to documents residing in the document suspense file.

Document Referencing

Documents in the accounts receivable chain can be linked together using referencing. **Referencing** enables FFIS to automatically liquidate a previous accounting event. The FFIS referencing facility enables collections to be matched with corresponding receivables. FFIS supports the application of several receipts against a single receivable.

System Checks

In addition to the normal checks that FFIS performs during the referencing process, the system uses the outstanding receivable balance of a billing document line as an amount ceiling for any cash receipt that reference that line. If a cash receipt exceeds the open receivable balance line that it is referencing, you must enter the difference on a separate line that does not reference that particular billing document line.

Tracking The Case History Of A Receivable. Several FFIS tables relating to the Accounts Receivable function maintain data on this type of accounting activity. Specifically, the Receivable Header Inquiry Table (ARHT) maintains summary information on all outstanding and some recently closed billing documents. The Receivable Line Inquiry Table (ARLT) maintains detailed accounting information for all outstanding and closed billing documents. The Outstanding Billing Documents Reference Table (OBDT) maintains a record of the outstanding billing documents only (*until the final collection is received or the receivable written-off*). The Accounts Receivable Case History Line Inquiry Table (ARCL) is a comprehensive table and maintains the complete history of a receivable.

Information maintained and tracked on the ARCL includes the following:

- Transaction date
- Payer names
- Codes identifying the activity occurred on the billing document
- Type of bill generated for the receivable
- Transaction amount of the receivable
- Outstanding amount of the receivable
- Receivable interest, administrative charges, or penalty charges, where applicable
- Receivable write-offs and collection agency referrals, where applicable
- Administrative referral fees assessed, where applicable

Trans Category	Baseline Trans Code
E	**External** (FFIS does not print a bill. An external process will generate the bill.)
N	**Do not print a bill** (FFIS does not print a bill.)
P	**Printed** (FFIS does not print a bill because one has already been printed.)
Y	**Print Bill** (FFIS will print a bill and then set the value of the Print Flag Indicator to ***P***, to indicate that a bill has already been printed.
C	**Continuous** (FFIS will print a bill and repeat printing based on the cycle days values on the AROP.)
S	**Suppress** (FFIS does not print a bill but performs the same updates as if a bill were printed.)

Figure 5:2. Bill Print Indicator Values

- The collection due date for the receivable. If you do not specify a collection due date, or the collection due date does not default based on the Bill Print Indicator, the Automatic Bill Generation process calculates the collection due date.
- If interest, administrative charges, or penalty charges should be waived in the event the receivable becomes overdue.

Generating A Bill. FFIS determines if a bill should be printed by checking the Bill Print Indicator in the Outstanding Billing Documents Reference Table (OBDT) and the Last Print Date on the ARHT. **Figure 5:2** identifies valid values for the Bill Print Indicator field.

If a Collection Due Date was not specified on the billing document, FFIS calculates the due date during the bill generation process. The Collection Due Date is the sum of the FFIS bill generation date and the cycle days specified in the Accounts Receivable Control Options Reference Table (AROP).

Collecting Funds. Cash receipts can be used to record the collection of funds and the receipt of a payment from a debtor. Types of accounting events that can be recorded using a cash receipt include revenue recognition, balance sheet transfers (e.g., advances), and expenditure (vendor) refunds.

Billing For Overdue Charges. If full payment of a receivable is not remitted by the collection due date, the Overdue Charges off-line batch process determines if the receivable is subject to interest, administrative charges, or penalty charges based on:

- Vendor type
- Age of the bill
- Any waiver specifications

Any overdue charges that FFIS determines should be applied to the receivable are posted to the receivable's entry in the ARHT and the ARLT using the accounting dimensions specified in the AROP.

An **interest charge** may be applied to an amount due that is not paid on time. FFIS selects receivables that are eligible for interest charges by checking the Bill Print Date field in the ARHT.

An **administrative charge** is a charge to the debtor for the costs of administering an overdue account. There are two types of administrative charges: a flat charge and an administrative (percentage) rate. The type of administrative charge can be specified in the AROP.

A **penalty charge** is a charge to the debtor to discourage paying bills late. There are two types of penalty charges: a flat charge or a penalty (percentage) rate. The type of penalty charge can be specified in the AROP.

Creating Dunning Letters. A **dunning letter** is a notice to a debtor that a receivable is overdue. In FFIS, dunning letters are created when you run an off-line batch program. This program selects receivables from the OBDT for which dunning letters should be generated.

Tracking Debt Appeals. In FFIS, debts that are appealed by the debtor (asking for the payment to be waived) can be tracked using the Debt Appeal Reference Table (APPL). Entries in the APPL are established when a billing document is processed.

Writing Off Bad Debts. A **write-off** is the transfer of the balance of an account into a loss account. For example, if a debtor becomes bankrupt or otherwise unable to pay his/her obligations, the amount owed to the agency would be written as a loss.

FFIS automatically selects receivables that are eligible for write-off based on client-defined parameters. For the selected receivables, the system creates cash receipts to clear the receivables and record the write-offs.

The automated process for handling ongoing write-off activity is described below.

An off-line batch process selects receivables for write-off from the ARHT and the ARLT and the OBDT. The **Write-off Threshold Amount** is the maximum amount that can be written off for a single receivable, and the **Write-off Days** is the minimum number of days that a receivable is overdue before it can be written off. Receivables are eligible for write-off if the number of days overdue i.e., the difference between the current date and the receivables Collection Due Date on the ARHT is greater than the Write-off Days entered in the AROP, and the total amount of the receivable is less than or equal to the Write-off Threshold Amount in the AROP.

All receivables that FFIS identifies as eligible for write-off are placed in the Write-off Table (WROT). An authorized user selects the appropriate receivables for write-off by setting the Write-off Flag to ***Y*** in the WROT. An off-line process then generates write-off cash receipts for all selected receivables.

The Department has determined that the maximum dollar amount that can be written off by any user is $25,000.

Referring An Overdue Account. When a debtor does not respond to your collection attempts, you can refer the account to an outside location, such as the IRS, the Department of Justice, or a private collection agency. If the account is not referred, you can write-off the account.

To refer the account in FFIS, you must first run an off-line batch process that selects accounts for referral based on values that are defined in the Accounts Receivable Referral Parameter Table (AREP). These values are:

- The number of days past due
- The outstanding amount of the receivable
- The number of dunning notices sent
- The number of days since the last dunning notice

The accounts that are selected are added to the Accounts Receivable Referral Table (AREF). Then you must determine if the account should be referred. If the account should be referred, you determine a destination for the referral and enter a Destination Code from the Account Referral Destination Table (ARDT) in the AREF to indicate the location of the referral.

The interfaced documents for the Accounts Receivable function are provided under **Accounts Receivable Documents** in this part**.**

Instructions for the tables described above are provided in **Part 8, FFIS Tables**.

For reference, see **Appendix J, FFIS Matrix for Accounts Receivable Processing**.

Accounts Receivable Documents

Documents used in the Accounts Receivable function are referred to as *interfaced documents*. Interfaced documents are created via an interface program and electronically transmitted into FFIS.

Each document is briefly described below and the instructions for using each are provided following these descriptions.

ABCO Billing Document (A1). Used to record the establishment and modification of receivables. The A1 is created through the Administrative Billings and Collections System (ABCO) interface to FFIS.

ABCO Regular Collection Cash Receipt Document (A2). Used to record and adjust regular collections which reference existing receivables. The A2 is created through the ABCO interface to FFIS.

ABCO Voluntary Collection Cash Receipt Document (A3). Used to record and adjust voluntary collections which usually reference existing receivables. The A3 is created through the ABCO interface to FFIS.

ABCO Write-Off Cash Receipt Document (WR). Used to record write-offs of uncollectible receivables. The WR is created through the ABCO interface to FFIS.

ABCO Billing Document (A1)

The A1 is generated by the Administrative Billings and Collections System (ABCO) interface to FFIS. The A1 is used to record the establishment and modification of receivables.

Each A1 consists of a header record and one or more line records. The A1 is a clone of the baseline Billing Document (BD). **Figure 5:3** and **Figure 5:4** show the A1 header and line screens.

After the A1 is processed and accepted in FFIS, the transaction updates the following tables:

- Receivable Header Inquiry and Receivable Line Inquiry Tables (ARHT, ARLT)
- Accounts Receivable Case History Line Inquiry Table (ARCL). This table is updated by an offline program.
- Outstanding Billing Documents Reference Table (OBDT)

To access the A1 through the Document Suspense File, see **Part 2,** **Using The Document Suspense File**.

```
COMMND:                DOCID: A1  1                          XX/XX/XX 12:20:59
STATUS:                BATID:                  SEC2:
H
                                BILLING DOCUMENT

    DOC DATE: 2          ACCTG PD: 3      TRANS TYPE:    BUDGET FYS:
    ACTION: 4                                DOCUMENT TOTAL: 5
    FUND:          DOC TYPE:    COMMENTS: 6
      BILL PRINT FLAG: 7  COLLECTION DUE DATE:          INTEREST RATE: 8
            TEXT TYPE:    AGREEMENT NUMB:               WAIVER FLAG: 9
          PAYER CODE: 10                        REF DOC #:
          PAYER NAME: 11
             ADDRESS: 12

                CITY: 13                 STATE: 14 ZIP: 15    -
     CAUSE OF OVERPAY:                                CASE HISTORY FLAG: 16
```

Figure 5:3. ABCO Billing Document (A1) header fields (Billing Document)

```
COMMND:                DOCID:                              XX/XX/XX 12:20:59
STATUS:                BATID:                          SEC2:
01
       LINE NO: 17              BFYS: 18                          FUND: 19
   BUD ORG/SUB: 20           PROGRAM: 21                  REV SRCE/SUB: 22
  COST ORG/SUB:              BOC/SUB: 23                    JOB NUMBER:
      RPTG CAT: 24        CLOSED BFYS:                    CLOSED FUND:
 INTEREST RATE: 25         TRANS TYPE: 26      GL ACCT:            TEXT TYPE:
        AMOUNT: 27               I/D: 28 DESC: 29
 REF DOC:                    REF LN:      ADVANCE NUM:            TRAV TYPE:
  SOURCE:      TYPE OF OVERPAYMENT:          ACTION OUT:  30

02
       LINE NO:                  BFYS:                             FUND:
   BUD ORG/SUB:               PROGRAM:                     REV SRCE/SUB:
  COST ORG/SUB:               BOC/SUB:                       JOB NUMBER:
      RPTG CAT:            CLOSED BFYS:                    CLOSED FUND:
 INTEREST RATE:             TRANS TYPE:         GL ACCT:            TEXT TYPE:
        AMOUNT:                   I/D:    DESC:
REF DOC:                     REF LN:      ADVANCE NUM:           TRAV TYPE:
 SOURCE:      TYPE OF OVERPAYMENT:          ACTION OUT:
```

Figure 5:4. ABCO Billing Document (A1) line fields (Billing Document)

The fields that are populated on the A1 through the interface process are listed below:

Command Fields

[1] **DocID** *(alphanumeric field, max. of 15 positions).* Displays the transaction code (***A1***), the sec1 code (i.e., the 2 position division code) and the document number (*max. of 11 positions)*. **Positions 1–6** represent the register schedule number (except position 2 is replaced with the fiscal month 1–9 for the first 9 months and A, B, C, for months 10–12), and, **positions 7–11** represent a sequential number derived from the Automated Document Numbering Table (ADNT). Note: If this is a modification document, the BATID field will be system generated by the ABCO interface.

Header Fields

[2] **Doc Date** (*numeric field, 6 positions).* Displays the date (*mmddyy*) of the document. This field is system generated with data inferred from the date parameter file, if specified, or from the Dates Table (DATE).

[3] **Acctg Pd** *(numeric field, 4 positions).* Displays the open accounting period date (*mmyy).* This field is system generated with data inferred from the Accounting Period Cutoff Reference Table (APCT). Note: The Accounting Period refers to the fiscal month and year, e.g., November 2000 is 02 01.

[4] **Action** *(alpha field, 1 position).* The system generates ***E*** for (original entry) or ***M*** for (modification).

[5] **Document Total** *(numeric field, max. of 15 positions).* Displays the document total. This field is system generated and is calculated by the interface program as the unsigned sum of all lines.

[6] **Comments** *(numeric field, 4 positions).* Displays the register schedule type derived from the 420-record.

[7] **Bill Print Flag** *(alpha field, 1 position).* The system generates ***N*** (no print) in this field.

[8] **Interest Rate** *(numeric field, max. of 7 positions).* Displays the appropriate interest rate imposed if the receivable is subject to interest charges and it is not collected by the collection due date. This field is set to default values derived from the Accounts Receivable Control Options Reference Table (ACXT).

[9] **Waiver Flag** *(alpha field, max. of 2 positions)*. The system generates ***W*** (waives interest, administrative charges, and penalties) in this field.

[10] **Payer Code** *(alphanumeric field, max. of 11 positions).* Displays **positions 3–13** of the ABCO debtor number.

[11] **Payer Name** *(alphanumeric field, max. of 30 positions).* Displays the payer's name derived from the Vendor Reference Table (VEND).

[12] **Address** *(alphanumeric field, max. of 60 positions).* Displays the payer's address derived from the VEND.

[13] **City** *(alpha field, max. of 19 positions).* Displays the payer's city derived from the VEND.

[14] **State** *(alpha field, 2 positions).* Displays the payer's state derived from the VEND.

[15] **ZIP** *(numeric field, max. of 9 positions).* Displays the payer's zip code derived from the VEND.

[16] **Case History Flag** *(alpha field, 1 position).* The field is system generated with default values derived from the AROP.

Line Fields

[17] **Line No** *(numeric field, 3 positions).* This field is system generated by the interface program where the first line is assigned ***001*.**

[18] **BFYs** *(numeric field, 2 positions).* Displays the budget fiscal year.

[19] **Fund** *(alphanumeric field, max. of 3 positions).* Displays the fund.

[20] **Bud Org/Sub** *(alphanumeric field, max. of 5 positions)*. Displays the budget organization

[21] **Program** *(alphanumeric field, max. of 9 positions)*. Displays the 9-position ACCS program code. This field is derived from the ACXT.

[22] **Rev Srce/Sub** *(numeric field, 4 positions)*. Displays the revenue source code derived from the 420-record.

[23] **BOC/Sub** *(numeric field, 4 positions).* Displays the budget object code derived from the 420-record.

[24] **Rptg Cat** *(alphanumeric field, 2 positions)*. Displays the 2-position special purpose code.

[25] **Interest Rate** *(numeric field, max. of 7 positions).* Displays the appropriate interest rate imposed if the receivable is subject to interest charges and it is not collected by the collection due date. This field defaults to the header interest rate value.

[26] **Trans Type** *(alphanumeric field, 2 positions).* Displays the transaction type. This field is derived from the General Ledger Interactive Description System Code Crosswalk Table (GLXT).

Line Fields *(cont'd)*

27 **Amount** *(numeric field, max. of 15 positions).* Displays the line amount. This field is derived from the 420-record and represents the unsigned amount.

28 **I/D** *(alpha field, 1 position).* Displays the increase (***I***) or decrease (***D***) amount indicator.

29 **Desc** *(alphanumeric field, max. of 30 positions).* Displays the ABCO Debtor Number and ABCO Bill Number in the following format: **positions 1–2** represent the Departmental Code; **positions 3–13** represent the Payer (Vendor) Code, **positions 14–18** are spaces; **positions 19–20** represent the System Code; **positions 21–29** represent the ABCO Bill Number.

30 **Action Out** *(alpha field, 3 positions).* Displays the status of the receivable, specifically, ***REC*** for Receivable, or ***CLM*** for Claim-Receivable. Receivables which are more than 90 days old move from Receivable to Claim-Receivable status.

ABCO Cash Receipt Documents (A2, A3, and WR)

The ABCO Regular Collection (A2), ABCO Voluntary Collection (A3), and ABCO Write-Offs (WR) Cash Receipt Documents are generated by the Administrative Billings and Collections System (ABCO) interface to FFIS. The A2, A3, and WR are used to record and adjust collections, voluntary collections, debit voucher negative collections, and write-offs which reference existing receivables. These documents may reference the *In-House* ABCO (A1) Billing Documents.

Each document consists of a header record and one or more line records. The A2, A3, and WR are clones of the baseline Cash Receipt Document (CR). **Figure 5:5** and **Figure 5:6** show the A2, A3, and WR header and line screens.

After the A2, A3, or WR is processed and accepted in FFIS, the transaction updates the following tables:

- Receivable Header Inquiry and Receivable Line Inquiry Tables (ARHT, ARLT)
- Accounts Receivable Case History Line Inquiry Table (ARCL). This table is updated by an offline program.
- Outstanding Billing Documents Reference Table (OBDT)

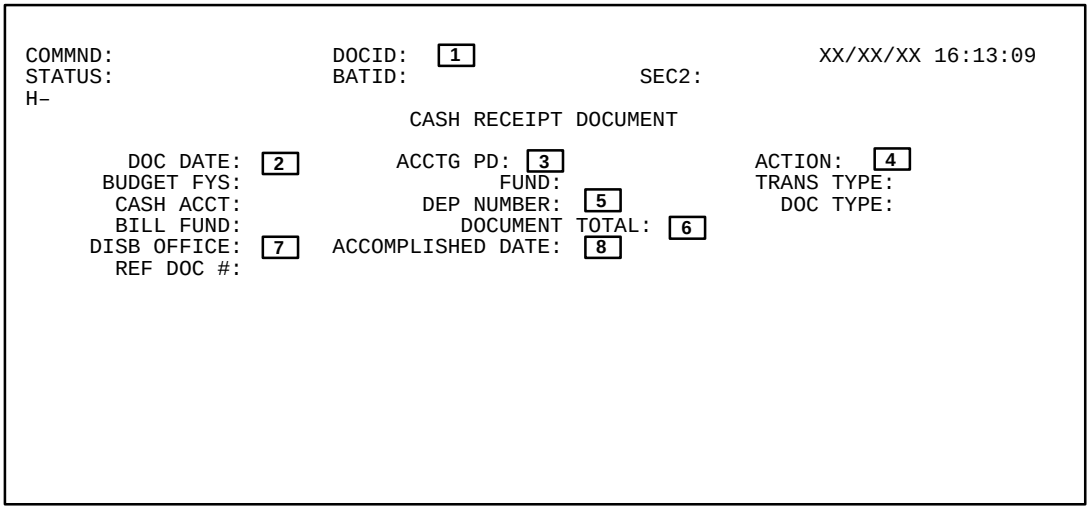

Figure 5:5. ABCO Cash Receipt Documents (A2, A3, WR) header fields (Cash Receipt Document)

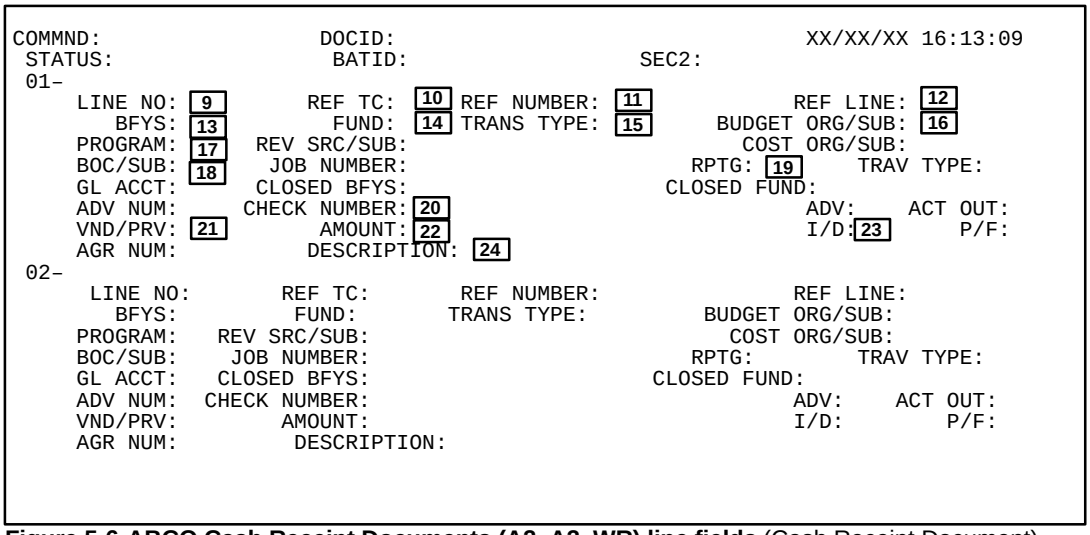

Figure 5:6. ABCO Cash Receipt Documents (A2, A3, WR) line fields (Cash Receipt Document)

- Cash Receipt Header Inquiry and Cash Receipts Line Inquiry Tables (CRHT, CRLT)

- Accounts Receivable Referral Inquiry Table (AREF)

To access the A2, A3, or WR through the Document Suspense File, see **Part 2, Using The Document Suspense File**.

The fields that are populated on the A2, A3, or WR through the interface process are listed below:

Command Fields

1 **DocID** *(alphanumeric field, max. of 15 positions).* Displays the transaction code (***A2***, ***A3, or WR***), the sec1 code (i.e., the 2 position division code) and the document number (*max. of 11 positions)*. **Positions 1–6** represent the register schedule number (except position 2 is replaced with the fiscal month 1–9 for the first 9 months and A, B, C, for months 10–12), and, **positions 7–11** represent a sequential number derived from the ADNT. Note: If this is a modification document for an A2 or A3, the BATID field will be system generated by the ABCO interface.

Header Fields

2 **Doc Date** (*numeric field, 6 positions).* Displays the date (*mmddyy*) of the document. This field is system generated with data inferred from the date parameter file, if specified, or from the DATE.

3 **Acctg Pd** *(numeric field, 4 positions).* Displays the open accounting period date (*mmyy).* This field is system generated with data inferred from the APCT. Note: The Accounting Period refers to the fiscal month and year, e.g., November 2000 is 02 01.

4 **Action** *(alpha field, 1 position).* The system generates ***E*** for (original entry) or ***M*** for (modification).

5 **Dep Number** *(alphanumeric field, max. of 12 positions).* Displays the deposit number. This field is derived from the certificate of deposit number stored in the schedule number on the 420-record.

6 **Document Total** *(numeric field, max. of 15 positions).* Displays the document total. This field is system generated and is calculated by the interface program as the unsigned sum of all lines.

7 **Disb Office** *(alphanumeric field, max. of 4 positions).* Displays the Disbursing Office code.

8 **Accomplished Date** (*numeric field, 6 positions).* Displays the accomplished date (*mmddyy*) derived from the schedule confirmation date.

Line Fields

9 **Line No** *(numeric field, 3 positions).* This field is system generated by the interface program where the first line is assigned ***001.***

10 **Ref TC** *(alphanumeric field, 2 positions).* Displays the referenced transaction code, if appropriate. This field is derived from the GIDT or XGIDT.

11 **Ref Number** *(alphanumeric field, max. of 11 positions).* Displays the referenced billing document number, if appropriate. This field is derived from the GIDT or XGIDT.

12 **Ref Line** *(numeric field, 3 positions).* Displays the referenced document line number, if appropriate. This field is derived from the GIDT.

13 **BFYs** *(numeric field, 2 positions).* Displays the budget fiscal year. This field is derived from the referenced document. If there is no referenced document, the field is derived from the DVAL.

14 **Fund** *(alphanumeric field, max. of 3 positions).* Displays the fund. This field is derived from the referenced document. If there is no referenced document, the field is derived from the DVAL.

15 **Trans Type** *(alphanumeric field, 2 positions).* Displays the transaction type.

16 **Budget Org/Sub** *(alphanumeric field, 5 positions).* Displays the budget organization. This field is derived from the referenced document. If there is no referenced document, the field is derived from the DVAL.Note:RD does not use the Budget Sub field.

17 **Program** (*alphanumeric field, max. of 9 positions*). Displays the 9-position ACCS code. This field is derived from the ACXT.

18 **BOC/Sub** *(numeric field, 4 positions).* Displays the budget object code. This field is derived from the referenced document. If there is no referenced document, the field is derived from the 420-record.

19 **Rptg** *(alphanumeric field, 2 positions).* Displays the 2-position special purpose code. This field is derived from the referenced document. If there is no referenced document, the field is derived from the DVAL.

20 **Check Number** *(numeric field, max. of 11 positions).* Displays the ABCO check identification number derived from the 420-record.

21 **Vnd/Prv** *(alphanumeric field, max. of 11 positions).* Displays the vendor/provider code. This field is derived from **positions 3–13** of the ABCO debtor number.

Line Fields *(cont'd)*

[22] **Amount** *(numeric field, max. of 15 positions).* Displays the line amount. This field is derived from the 420-record object class amount and represents the unsigned amount.

[23] **I/D** *(alpha field, 1 position).* Displays the increase (***I***) or decrease (***D***) amount indicator.

[24] **Description** *(alphanumeric field, max. of 30 positions).* Displays the ABCO Debtor Number and ABCO Bill Number in the following format: **positions 1–2** represent the Departmental Code; **positions 3–13** represent the Payer (Vendor) Code, **positions 14–18** are spaces; **positions 19–20** represent the System Code; **positions 21–29** represent the ABCO Bill Number.

PART 6.

GENERAL LEDGER

General Ledger Overview **6:3**
FFIS General Ledger Posting Rules 6:3
Custom Transaction Code 6:5
Self-Reversing Vouchers 6:5
Recurring Journal Voucher 6:5
General Ledger Documents **6:6**
Standard Voucher Document (SV) 6:7
Journal Voucher Document (JV) 6:11

General Ledger Overview

The functions of the General Ledger (GL) encompass all other FFIS functions. These functions include:

- Posting entries (debits and credits) for FFIS transactions to the FFIS General Ledger and journals.
- Maintaining account balances in the General Ledger and journals.
- Maintaining a detailed audit trail of FFIS budget and financial transactions, which is used to produce reports that are in compliance with the Standard General Ledger (SGL).

In addition, the General Ledger function is used to record miscellaneous accounting transactions that are typically not handled by other FFIS functions (e.g., adjustments).

All transactions processed in FFIS require a transaction code and a transaction type. This combination of transaction code and transaction type determine the resulting debits and credits. In addition, the FFIS common posting routine assures a match between FFIS accounting codes entered and accounting events. For example, FFIS verifies that for a revenue transaction the corresponding postings affect revenue General Ledger accounts and that a revenue source code is entered on the document.

Once verified, postings are made to an online journal. The runsplit process, which is run as part of the nightly cycle, splits the online journal into a set of sequential files (i.e., offline journals) which are used for the storage and reporting of historical data.

The transaction date and accounting period are recorded for all FFIS transactions. Records for each General Ledger account are maintained by fiscal month, fiscal year, and the Accounting Classification Code Structure (ACCS) and may be reported on a daily, monthly, quarterly, or yearly basis using a combination of the ACCS elements. FFIS also provides trial balances by fund and other portions of the ACCS to verify that the General Ledger is in balance and/or to report on differences.

FFIS General Ledger Posting Rules

Accounting rules established in the FFIS General Ledger reference tables control how transactions are posted to the general ledger. When a transaction is entered in FFIS, the reference tables are used to verify general ledger accounts and events and to determine the proper debit and credit entries.

Budget Object Code (BOC) Posting

The BOC posting feature allows entries to differentiate debit and credit posting based on the BOC involved in the transaction. It is most useful when an agency accounts for its assets with a large number of different GL accounts. For example, USDA establishes posting models for equipment, certain types of supplies, and other assets such as buildings and land. The posting models debit different asset or expense accounts as the offset to accounts payable and credit different accounts under appropriated capital used as the offset to appropriated capital.

BOC posting is normally used on an exception basis, rather than for all object codes. For object codes which require special posting models, BOC postings is selected in the Budget Object Code Reference Table (BOCT) and a unique record is created in the Accounting Entries Definition Reference Table (ACED) for the combination of transaction code, transaction type, and BOC. For all other object codes, BOC posting is not selected in the BOCT and a single ACED record is created which does not specify a particular BOC.

Figure 6:1 displays two sample posting models for the Payment Voucher Document (PV): one for general expenses and one for equipment (BOC 3100). The general expenses posting model is used when BOC posting is not selected for the BOC entered on the PV.

Trans Code	Trans Type	BOC	Debits	Credits
PV	01		6101 – Operating Expenses – Funded	2110 – Accounts Payable
			4610 – Unobligated Allotment	4900 – Expenditure
			3100 – Appropriated Capital	5701 – Appropriated Capital Used – Expenses
PV	01	3100	1750 – Equipment	2110 – Accounts Payable
			4610 – Unobligated Allotment	4900 – Expenditure
			3100 – Appropriated Capital	5703 – Appropriated Capital Used – Fixed Assets

Figure 6:1. Budget Object Posting Model

By using the BOC posting option, the user can reduce the number of different transaction types required for posting, since FFIS infers the appropriate General Ledger accounts from the BOC entered on the document. BOC posting is very useful for posting the PV. For additional information on the PV, see **Part 4, Spending**.

Vendor Category/Type Posting

The Vendor Category/Type posting feature allows entries to differentiate debit and credit posting based on the vendor category involved in the transaction. It is most useful when the agency categorizes its payables by vendor. **Figure 6:2** displays sample posting models for payments to Federal (Type G) and Non-Federal (Type N) vendors.

By using the vendor posting option, the agency can reduce the number of different transaction types required for postings, since FFIS infers the proper General Ledger accounts based on the vendor category/type from the vendor code entered. Vendor posting is useful for posting PVs.

Trans Code	Trans Type	Vend Type/Cat	Debits	Credits
PV	01	G	6100 – Operating Expenses	2111 – Accounts Payable – Federal
			4610 – Unobligated Allotment	4900 – Expenditure
			3100 – Appropriated Capital	5700 – Appropriated Capital Used
PV	01	N	6100 – Operating Expenses	2110 – Accounts Payable – Non-Federal
			4610 – Unobligated Allotment	4900 – Expenditure
			3100 – Appropriated Capital	5700 – Appropriated Capital Used

Figure 6:2. Vendor Category/Type Posting Model

Fund Category Posting

The fund category posting feature allows entries to differentiate debit and credit posting based on the type of fund involved in the transaction. For example, USDA uses fund category posting to differentiate between reimbursable funds, working capital funds, and other types of funds.

Fund category posting is normally used on an exception basis, rather than for all fund categories. For fund categories which require special posting models, fund category posting is selected in the Fund Reference Table (FUND) and a unique record is created in the ACED for combination of transaction code, transaction type, and fund category. For all other fund categories, fund category posting is not selected in the FUND, and a single ACED record is created which does not specify a particular fund category.

Figure 6:3 displays two sample posting models for PVs: one for non-reimbursable, non-working capital funds, and one for reimbursable funds. The first posting model is used when fund category posting is not selected for the category of the fund code entered on the PV.

By using the fund category posting option, you can reduce the number of different transaction types required for posting, since FFIS infers the proper General Ledger accounts based on the category of fund entered on the document. You do not need to know the fund category being used; FFIS infers the correct fund category from the fund code entered.

Trans Code	Trans Type	Fund Cat	Debits	Credits
PV	01		6100 – Operating Expenses	2110 – Accounts Payable
			4610 – Unobligated Allotment	4900 – Expenditure
			3100 – Appropriated Capital	5700 – Appropriated Capital Used
PV	01	R	6100 – Operating Expenses	2110 – Accounts Payable
			4610 – Unobligated Allotment	4900 – Expenditure

Figure 6:3. Fund Category Posting Model

Project Type Posting

The project type posting feature allows entries to differentiate debit and credit posting based on the type of project involved in the transaction. **Figure 6:4** displays sample posting models for payments against three types of projects: non-capital, work-in process, and capital projects.

By using the project posting option, you can reduce the number of different transaction types required for posting, since FFIS infers the appropriate General Ledger accounts from the project entered on the document. You do not need to know the project post type; FFIS infers the correct project post type from the project code entered.

Trans Code	Trans Type	Project Post Type	Debits	Credits
PV	01	NP	6100 – Operating Expenses	2110 – Accounts Payable
			4610 – Unobligated Allotment	4900 – Expenditure
			3100 – Appropriated Capital	5700 – Appropriated Capital Used
PV	01	WP	1720 – Construction In Progress	2110 – Accounts Payable
			4610 – Unobligated Allotment	4900 – Expenditure
			3100 – Appropriated Capital	5703 – Appropriated Capital Used – Fixed Assets
PV	01	CP	1730 – Buildings	2110 – Accounts Payable
			4610 – Unobligated Allotment	4900 – Expenditure
			3100 – Appropriated Capital	5703 – Appropriated Capital Used – Fixed Assets

Figure 6:4. Project Type Posting Model

Custom Transaction Code

The custom transaction code required by RD is used to allow you to easily identify the specific type of spending, billing, or collection activity represented by a particular transaction.

Self-Reversing Vouchers

FFIS provides the capability to automatically reverse postings established by the Journal Voucher Document (JV) or the Standard Voucher Document (SV). The Reversal Accounting Period field on the JV or SV is used to indicate whether the JV or SV should be reversed. Reversing vouchers are often for payroll processing. Payroll estimates are entered with SV during the month and then reversed at the end of the month when the actual payroll accrual is posted.

Recurring Journal Voucher

FFIS provides the capability to enter information in the Recurring Journal Voucher and Standard Voucher Data Entry Table (REJV) to produce JV or SV on a recurring basis.

Instructions for completing the documents discussed above are provided under **General Ledger Documents** in this part**.**

Instructions for the tables described above are provided in **Part 8, FFIS Tables**.

General Ledger Documents

Documents used in the General Ledger function are briefly described below. Instructions for using these documents are provided following these descriptions or are provided in the part indicated in the description.

Journal Voucher Document (JV). Used to handle miscellaneous accounting transactions not handled by another function. It records nonstandard accruals, and period-end adjusting entries, and balance sheet transfers. It also records transactions that are automatically reversed at a later date and transactions that reclassify accounts.

Standard Voucher Document (SV). Used to record changes to the accounting distribution codes previously entered in a revenue or spending document. It records nonstandard accruals, period-end adjusting entries, balance sheet transfers, and accounting adjustments. It also records accounting transactions that occur regularly (e.g., expensing a pre-paid item, recording monthly accruals), expenses previously recorded expenditures, modifies closed documents, and posts payroll expenditures.

Payment Voucher Document (PV). Used to record authorization of payment (Treasury check or EFT disbursement) to a vendor for goods and/or services accepted and invoiced, to record revenue refunds, and to record balance sheet transfers. See **Part 4**, **Spending** for more information.

Standard Voucher Document (SV)

The SV is used to record changes to the accounting distribution codes previously entered in a revenue or spending document. It records nonstandard accruals, period-end adjusting entries, balance sheet transfers, and accounting adjustments.

Additionally, the SV can be used to record accounting transactions that occur regularly (e.g., expensing a prepaid item, recording monthly accruals), expense previously recorded expenditures, modify closed documents, and post payroll expenditures.

After the SV is processed, you can view the results in the following tables:

- Journal Voucher and Standard Journal Inquiry Table (JVLT)
- Budget Execution tables (ALOC, ALLT, SASP).
- Document Cross Reference Inquiry Table (DXRF)

To access the SV, at the FFS screen, key in ***L*** at the Action field and ***SV*** at the TableID field. Use the [Space Bar] to erase the remaining 2 characters. Press [Enter]. The SV screen (**Figure 6:5**) is displayed.

Detailed instructions for adding and modifying SVs are described below.

Adding/Modifying A Document. At the SV screen, complete the fields as follows:

Command Fields

[1] **Commnd** *(alpha field, 3 positions)*

ADD: *(no-entry)*. ***New*** is system generated. Press [Tab].

MOD: (*conditional*). If the document currently resides in the Document Suspense File, key in ***Get*** and press [Tab]. If the document has been archived (no longer in the Document Suspense File), see **Recreating An Archived Document** in **Part 2** under **Processing In Document**.

[2] **DocID** *(required, alphanumeric field; max. of 15 positions).*

ADD: At the system-generated transaction code (***SV***), press [Tab]. Key in the sec1 code (i.e., the 2 position division code) and press [Tab]. Key in the Org Code (5-positions). Press [#], then press [Enter]. Sequential numbers are generated in positions 10–15.

MOD: Key in the document identification of the original document. Press [Enter]. The selected document is displayed. Key in ***New*** at the Command field. Press [Tab] to move the cursor to the BatID field.

[3] **Status** *(no-entry).* After the document is processed, this field displays the current status of a document.

[4] **BatID** (*alphanumeric field, max. of 12 positions*).

ADD: (*no-entry*). This field is used only when modifying documents.

MOD: (*required*)**.** Key in the transaction code (***SV***) and press [Tab]. Key in the same sec1 code as entered on the original document and then key in the batch ID number (*max. of 6 positions*). You may name the batch ID number as desired. Press [Enter].

The Batch Ticket screen is displayed. Press [Enter]. The new header screen is displayed. The cursor positions on the first header field.

```
COMMND: NEW [1]          DOCID: SV [2]                    XX/XX/XX 13:45:00
STATUS: [3]              BATID: [4]          SEC2: [5]
H-
                          STANDARD VOUCHER DOCUMENT

              SV DATE: [6]                          ACCOUNTING PERIOD: [7]
               ACTION: [8]   EXPENSE(E), REVENUE(R), GL(G), BUDGET(B): [9]
         BUDGET FYS: [10]                                      FUND: [11]
   REVERSAL PERIOD: [12]
              COMMENT: [13]              BUDGET OVERRIDE IND: [14]
        REF TRANS ID: [15]

       DOCUMENT TOTAL: [16]

          DESCRIPTION: [17]
```

Figure 6:5. Standard Voucher (SV) header fields

Command Fields *(cont'd)*

[5] **Sec2** *(no-entry)*. The system generates the security code that is inferred from your user ID to verify your authority to create this document. This data is not displayed.

Header Fields

[6] **SV Date** *(optional default, numeric field; 6 positions)*. Key in the date (*mmddyy*) of the document. If left blank, the system defaults to the date the document is accepted by the system.

[7] **Accounting Period** *(optional default, numeric field; 4 positions)*. Key in the open accounting period date (*mmyy)*. If left blank, the system defaults to the accounting period inferred from the document date in the CLDT, but it is not displayed.

[8] **Action** *(alpha field, 1 position)*.

ADD: (*optional default*). Key in ***E*** to enter a new document.

MOD: (*required*). Key in ***M*** to modify a previously accepted document.

[9] **Expense (E), Revenue (R), GL (G), Budget (B)** *(optional, alpha field; 1 position)*. Key in one of the following:

E	=	Expense Adjustment
R	=	Revenue Adjustment
G	=	General Ledger Transfer
B	=	Budget Transfer

[10] **Budget FYs** *(optional default, numeric field; 2 positions)*. Key in the last 2 digits of the fiscal year to which this document applies. If left blank, the system defaults to the budget fiscal year inferred from the SV date.

[11] **Fund** *(optional, alphanumeric field; max. of 3 positions)*. Key in the fund code for all lines in this document.

[12] **Reversal Period** *(conditional, numeric field; 4 positions)*. If this SV should be automatically reversed, key in the accounting period in which the reversal should take place (i.e., fiscal month and year). Otherwise, leave blank.

[13] **Comments** *(optional, alphanumeric field; max. of 12 position*s). Key in notes about this document.

[14] **Budget Override Ind** *(optional default, alpha field; 1 position)*. Key in ***Y*** or ***N***. If left blank, the system defaults to ***N.***

[15] **Ref Trans ID** *(conditional, numeric field; max. of 13 positions)*. If this document relates to another document, key in the reference transaction code and document number.

[16] **Document Total** *(required, numeric field; max. of 15 positions)*. Key in the unsigned amount of all lines in the document. Compute the difference between the total increased amounts and the total decreased amounts.

[17] **Description** *(optional, alphanumeric field; max. of 30 positions)*. Key in the description to be used as the default line description for all lines in this document where no line descriptions entered.

After completing the header fields, press [Enter]. Complete the line fields (**Figure 6:6**) as described below.

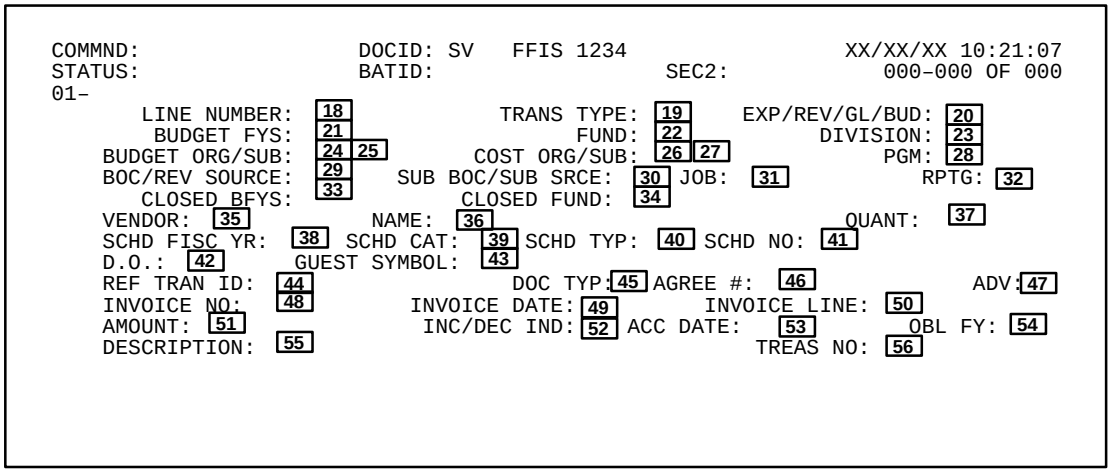

Figure 6:6. Standard Voucher Document (SV) line fields

Line Fields

[18] **Line Number** *(required, numeric field; 3 positions).* Key in a different number for each line (i.e., ***001*** to ***999*)**.

[19] **Trans Type** *(required, alphanumeric field; 2 positions).* Key in the transaction type that describes the accounting event that should be recorded for this document line.

[20] **Exp/Rev/Gl/Bud** (*conditional, alpha field; 1 position*). If different from **Field 9**, key in one of the following codes associated with this line. Otherwise, optional.

- ***E*** = Expense
- ***R*** = Revenue
- ***G*** = General Ledger Transfer
- ***B*** = Budget Transfer

[21] **Budget FYs** (*no-entry*). Leave blank. The budget fiscal year is derived from the Default Values Reference Table (DVAL).

[22] **Fund** *(no-entry).* Leave blank. The fund code is derived from the DVAL.

[23] **Division** *(no-entry)*. Leave blank. The division code is derived from the DVAL.

[24] **Budget Org** *(no-entry*). Leave blank. The budget organization code is derived from the DVAL.

[25] **Budget Sub** *(no-entry).*This field is not used by RD.

[26] **Cost Org** *(no-entry)*. Leave blank. The cost organization code is derived from the DVAL.

[27] **Cost Sub** *(no-entry)*. This field is not used by RD.

[28] **Pgm** *(required, alphanumeric field; 9 positions)*. Key in the 9-position ACCS code.

[29] **BOC/Rev Source** *(conditional, numeric field; 4 positions)*. If required by account type, key in the budget object code or revenue source appropriate for this document.

[30] **Sub BOC/Sub Srce** *(no-entry)*. This field is not used by RD.

[31] **Job** *(no-entry).* This field is not used by RD.

[32] **Rptg** *(no-entry)*. Leave blank. The reporting category is derived from the DVAL, and contains the 2-position special purpose code.

[33] **Closed BFYs** *(no-entry).* Leave blank.

[34] **Closed Fund** *(no-entry).* Leave blank.

[35] **Vendor** *(optional, numeric field; max. of 11 positions).* Key in the code of the vendor appropriate for this document. See the VEND for valid vendor codes.

[36] **Name** *(conditional, alphanumeric field; max. of 30 positions).* If a vendor code is not specified, key in the vendor's name. Otherwise, optional.

[37] **Quant** *(optional, numeric field; max. of 9 positions).* Key in the number of hours if this is a payroll adjustment.

[38] **Schd Fisc Yr** *(optional, numeric field; 2 positions).* Key in the fiscal year associated with the payment. It is entered only if a schedule number was entered for Treasury disbursing agencies.

[39] **Schd Cat** *(optional, alpha field; 1 position).* Key in the payment method used for disbursement of this payment document. It is entered only if a schedule number was entered for Treasury-disbursing agencies. Valid values are:

- ***T*** = Automated Tape Schedule
- ***M*** = Manual SF–1166
- ***A*** = ACH Tape
- ***S*** = TFCS SF–1166

[40] **Schd Typ** *(optional, alpha field; 1 position).* Key in the voucher schedule type, either ***M*** (Miscellaneous) or ***T*** (Transportation).

[41] **Schd No** *(optional, numeric field; max. of 9 positions).* Key in the agency schedule for the document being entered.

[42] **D. O.** *(optional, alphanumeric field; 4 positions).* Key in the disbursing office for the line being entered.

[43] **Guest Symbol** *(optional, alphanumeric field; max. of 15 positions).* Key in the other fund's Treasury symbol for those lines that impact interfund transfers.

[44] **Ref Tran ID** *(conditional, numeric field; max. of 16 positions).* If this document relates to another document, key in the reference document. If a Ref Tran ID is entered in the header, key in only the reference document line number. If left blank, the system defaults to the value entered in the header.

[45] **Doc Typ** *(optional, alphanumeric field; 1 position).* Key in the document type associated with the reference document.

[46] **Agree #** *(conditional, numeric field; max. of 15 positions).* If the accounting event is for a reimbursable agreement, key in the agreement number. Otherwise, optional.

Line Fields *(cont'd)*

47 **Adv** *(conditional, alpha field; 1 position).* If the Agree # (**Field 46**) is entered and the SOPT is set to *Y,* key in one of the following advance indicators:

A = Advance
U = Advance used
N = Otherwise

48 **Invoice No** *(conditional, numeric field; max. of 20 positions).* If this document references a vendor invoice, key in the invoice number. Otherwise, leave blank.

49 **Invoice Date** *(conditional, numeric field; 6 positions).* If this document references a vendor invoice, key in the invoice date (*mmddyy*). Otherwise, leave blank.

50 **Invoice Line** *(conditional, numeric field; 3 positions).* If this document references a vendor invoice, key in the invoice line number. Otherwise, leave blank.

51 **Amount** *(required, numeric field; max. of 15 positions).* Key in the dollar amount of the item described in this line. If this is a modification of a previous line, key in the amount of the change. The Inc/Dec field indicates whether this is to be added or subtracted from the original amount.

52 **Inc/Dec Ind** *(conditional, alpha field; 1 position).* If making an adjustment, key in one of the following indicators:

I = Amount is an increase
D = Amount is a decrease

If left blank, the system defaults to ***I***.

53 **Acc Date** *(conditional, numeric field; 6 positions).* If the Accomplished Date Required flag in the Disbursing Options Reference Table (DOPT) is ***Y,*** Key in the accomplished date for the document being entered. Otherwise, optional.

54 **Obl FY** *(conditional, numeric field; 2 positions).* If this document is recovering funds from a previous year, key in the year the obligation was incurred. Otherwise, optional.

55 **Description** *(optional, alphanumeric field; max. of 30 positions).* Key in a description.

56 **Treas No** *(optional, numeric field; max. of 11 positions).* Key in the Treasury document number for the document being entered. This should be the pre-printed SF-1166 number or the SIBAC number.

After Completing The Fields

Follow the steps below to edit and process the data:

1. At the Command field, key in ***E*** (edit, for the Add action) or ***EB*** (edit batch, for the Modify action).

2. Press [Enter] to edit the data. If errors are detected, error messages are displayed at the bottom of the screen. All fatal errors must be corrected before the database is updated. For more information about error messages and correcting errors, see **Part 2, System Edits**.

3. After the data passes system edits, process the document as described:

- For the **Add** action, key in ***R*** (run) at the Command field. Press [Enter]. The document status is displayed.

OR

- For the **Modify** action, the Batch Ticket screen is displayed. The message *No Error Detected* is displayed at the bottom of the screen. Key in ***RB*** (run batch) in the Command field. Press [Enter]. The message *All Documents Accepted* is displayed at the bottom of the Batch Ticket screen.

Performing Other Actions. For general instructions on canceling and deleting documents, see **Part 2, Using Documents**.

Journal Voucher Document (JV)

Journal Voucher documents should not be entered without Department approval

The JV is used to handle miscellaneous accounting transactions not handled by another function. It records nonstandard accruals, and period-end adjusting entries, and balance sheet transfers. It also records transactions that are automatically reversed at a later date and transactions that reclassify accounts.

After the JV is processed, you can view the results in the following tables:

- Journal Voucher and Standard Journal Inquiry Table (JVLT)
- Budget Execution tables (ALOC, ALLT, SASP).
- Document Cross Reference Inquiry Table (DXRF)

To access the JV, at the FFS screen, key in ***L*** at the Action field and ***JV*** at the TableID field. Use the [Space Bar] to erase the remaining 2 characters. Press [Enter]. The JV screen (**Figure 6:7**) is displayed.

Detailed instructions for adding and modifying JVs are described below.

Adding/Modifying A Document. At the JV screen, complete the fields as follows:

Command Fields

[1] **Commnd** *(alpha field, 3 positions)*

ADD: *(no-entry)*. ***New*** is system generated. Press [Tab].

MOD: (*conditional*). If the document currently resides in the Document Suspense File, key in ***Get*** and press [Tab].

If the document has been archived (no longer in the Document Suspense File), see **Recreating An Archived Document** under **Processing In Documents** in **Part 2**.

[2] **DocID** *(required, alphanumeric field; max. of 15 positions).*

ADD: At the system-generated transaction code (***JV***), press [Tab]. Key in the sec1 code (i.e., the 2 position division code) and press [Tab]. Key in the Org Code (5-positions). Press [#], then press [Enter]. Sequential numbers are generated in positions 10–15.

MOD: Key in the document identification of the original document. Press [Enter]. The selected document is displayed. Key in ***New*** at the Command field. Press [Tab] to move the cursor to the BatID field.

[3] **Status** *(no-entry).* After the document is processed, this field displays the current status of a document.

[4] **BatID** (*alphanumeric field, max. of 12 positions).*

ADD: (*no-entry*). This field is used only when modifying documents.

MOD: (*required*)**.** Key in the transaction code (***JV***) and press [Tab]. Key in the same sec1 code as entered on the original document and then key in the batch ID number (*max. of 6 positions*). You may name the batch ID number as desired. Press [Enter].

The Batch Ticket screen is displayed. Press [Enter]. The new header screen is displayed. The cursor positions on the first header field.

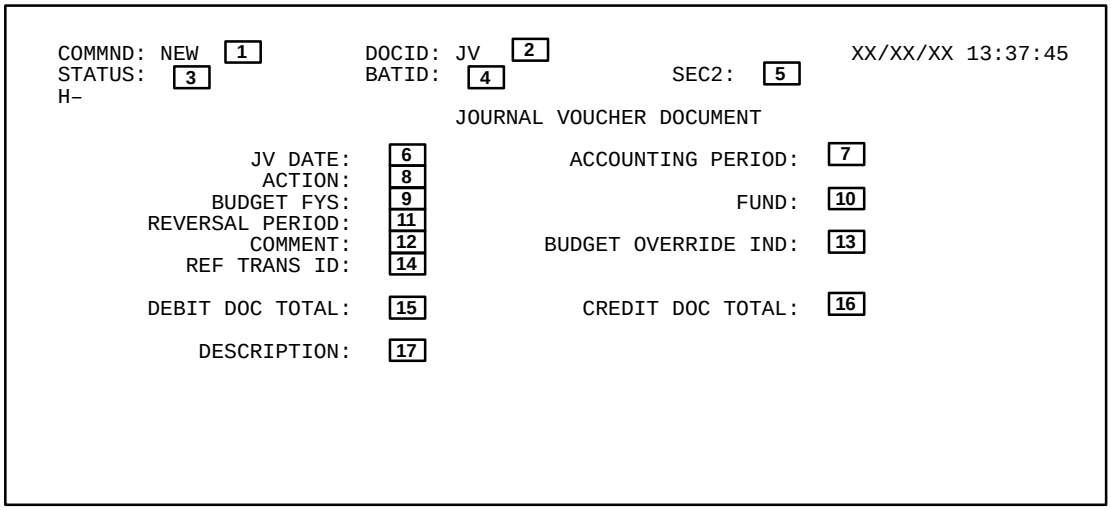

Figure 6:7. Journal Voucher Document (JV) header flelds

Command Fields *(cont'd)*

5 **Sec2** *(no-entry).* The system generates the security code that is inferred from your user ID to verify your authority to create this document. This data is not displayed.

Header Fields

6 **JV Date** *(optional default, numeric field; 6 positions).* Key in date (*mmddyy*) to be associated with the document. If left blank, the system defaults to the date the document was accepted by the system.

7 **Accounting Period** *(optional default, numeric field; 4 positions).* Key in the open accounting period date (*mmyy)*. If left blank, the system defaults to the accounting period inferred from the document date in the CLDT, but it is not displayed.

8 **Action** *(alpha field, 1 position).*

ADD: (*optional default*). Key in ***E*** to enter a new document

MOD: (*required*). Key in ***M*** to modify a previously accepted document.

If left blank, the system defaults to ***E***.

9 **Budget FYs** *(no-entry).* Leave blank.

10 **Fund** *(no-entry).* Leave blank.

11 **Reversal Period** (*conditional, numeric field; max. of 4 positions).* If the JV should be automatically reversed, key in the accounting period in which the reversal should take place in *mmyy* format. Otherwise, leave blank.

12 **Comments** *(optional, alphanumeric field; max. of 12 positions).* Key in any notes about this document.

13 **Budget Override Ind** *(optional default, alpha field; 1 position).* Key in ***Y*** or ***N***. ***Y*** allows spending controls to be overridden. If left blank, the system defaults to ***N***.

14 **Ref Trans ID** *(conditional, alphanumeric field; max. of 13 positions).* If this document relates to another document, key in the transaction code and document number of the document being referenced.

15 **Debit Doc Total** *(required, numeric field; max. of 15 positions).* Key in the total of all debit lines in the document.

16 **Credit Doc Total** *(required, numeric field; max. of 15 positions).* Key in the total of all credit lines in the document.

17 **Description** *(optional, alphanumeric field; max. of 30 positions).* Key in a description to serve as the default line description for all lines in this document.

After completing the header fields, press [Enter]. Complete the line fields (**Figure 6:8**) as described below.

Line Fields

18 **Line** *(required, numeric field; 3 positions).* Key in a different number for each line (i.e., ***001*** to ***999***).

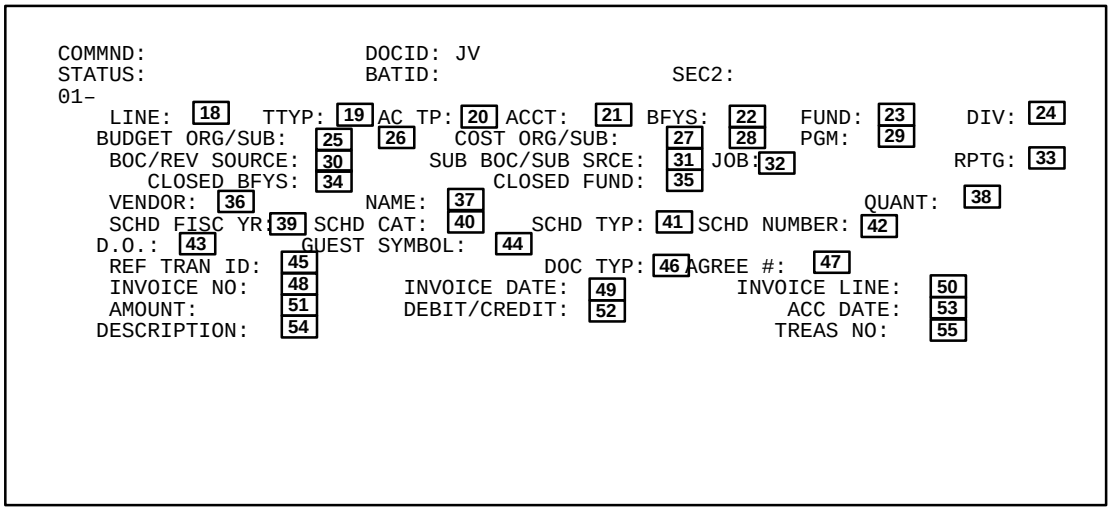

Figure 6:8. Journal Voucher Document (JV) line fields

Line Fields *(cont'd)*

19 **TTyp** *(required, alpha field; 2 positions)*. Key in the transaction type that defines the accounting model. See the ACED for valid transaction types.

20 **Ac Tp** *(required, numeric field; 2 positions)*. Key in the valid account type for the General Ledger account in this line.

21 **Acct** (*required, alphanumeric field; 4 positions)*. Key in the valid General Ledger account code appropriate for this document line.

22 **BFYs** *(no-entry)*. Leave blank. The budget fiscal year is derived from the DVAL.

23 **Fund** *(no-entry)*. Leave blank. The fund code is derived from the DAVL.

24 **Div** *(no-entry)*. Leave blank. The division code is derived from the DVAL.

25 **Budget Org** *(no-entry)*. Leave blank. The budget organization code is derived from the DVAL.

26 **Budget Sub** *(no-entry)*. Leave blank. This field is not used by RD.

27 **Cost Org** *(no-entry)*. Leave blank. The cost organization code is derived from the DVAL.

28 **Cost Sub** *(no-entry)*. This field is not used by RD.

29 **Pgm** *(required, numeric field; 9 positions)*. Key in the 9-position ACCS code.

30 **BOC/Rev Source** *(conditional, numeric field; 4 positions)*. If required by account type, key in the budget object code or revenue source appropriate for this document. Otherwise, optional.

31 **Sub BOC/Sub Srce** *(no-entry)*. This field is not used by RD.

32 **Job** *(no-entry).* This field is not used by RD.

33 **Rptg** *(no-entry).* Leave blank. The reporting category is derived from the DVAL and contains the 2-position special purpose code.

34 **Closed BFYs** *(no-entry).* Leave blank.

35 **Closed Fund** *(no-entry).* Leave blank.

36 **Vendor** *(optional, alphanumeric field; max. of 11 positions).* Key in the code of the vendor associated with this line. See the VEND for valid vendor codes.

37 **Name** *(conditional, alphanumeric field; max. of 30 positions).* If a vendor code is not specified, key in the vendor's name. Otherwise, leave blank.

38 **Quant** *(optional, numeric field; max. of 9 positions).* Key in the number of units for this line.

39 **Schd Fisc Yr** *(conditional, numeric field; 2 positions).* If a schedule number was entered for Treasury-disbursing agencies, key in the fiscal year associated with the payment. Otherwise, leave blank.

40 **Schd Cat** *(conditional, alpha field; 1 position).* If a schedule number was entered for Treasury-disbursing agencies, key in one of the following valid payment method codes:

T=Automated Tape Schedule

M=Manual SF–1166

A=ACH Tape

S=TFCS SF–1166

41 **Schd Typ** *(optional, alpha field; 1 position).* Key in one of the following voucher schedule types:

M=Miscellaneous

T=Transportation

42 **Schd Number** *(optional, numeric field; 9 positions).* Key in the agency schedule number for the line being entered.

43 **D. O.** *(optional, numeric field; 4 positions).* Key in the disbursing office number for the line being entered.

44 **Guest Symbol** *(conditional, numeric field; max. of 15 positions).* If the line affects interfund transfers, key in the Treasury symbol of the other fund. Otherwise, leave blank.

45 **Ref Tran ID** *(conditional, alphanumeric field; max. of 16 positions).* If the document relates to another document, key in the Tran ID of the referenced document. If a Ref Tran ID (**Field 14**) is entered in the header, key in only the reference document line number. Otherwise, leave blank.

46 **Doc Typ** *(conditional, alpha field; 1 position).* If a reference document was entered, key in the document type associated with that referenced document. Otherwise, leave blank.

47 **Agree #** *(optional, alphanumeric field; max. of 15 positions).* Key in the agreement number appropriate for this line.

Line Fields *(cont'd)*

48 **Invoice No** *(conditional, numeric field; max. 20 positions).* If this document references a vendor invoice, key in the invoice number. Otherwise, leave blank.

49 **Invoice Date** *(conditional, numeric field; 6 positions).*If this line references a vendor invoice, key in the invoice date (*mmddyy*). Otherwise leave blank.

50 **Invoice Line** *(conditional, numeric field; 3 positions).*If this line references a vendor invoice, key in the invoice line number. Otherwise, leave blank.

51 **Amount** *(required, numeric field; max. of 15 positions).*Key in the amount of the item described in this line.

52 **Debit/Credit** *(required, alpha field; 1 position).* Key in one of the following to indicate that the amount is either a debit or a credit:

D = Debit amount
C = Credit amount

53 **Acc Date** *(optional, numeric field; 6 positions).* Key in the accomplished date (*mmddyy*) for the document being entered.

54 **Description** *(optional, alphanumeric field; max. of 30 positions).* Key in a description.

55 **Treas No** *(optional, numeric field; 11 positions).* Key in the Treasury document number (i.e., the pre-printed SF1167 number or the SIBAC number) for the line being entered.

After Completing The Fields

Follow the steps below to edit and process the data:

1. At the Command field, key in ***E*** (edit, for the Add action) or ***EB*** (edit batch, for the Modify action).

2. Press [Enter] to edit the data. If errors are detected, error messages are displayed at the bottom of the screen. All fatal errors must be corrected before the database is updated. For more information about error messages and correcting errors, see **Part 2, System Edits**.

3. After the data passes system edits, process the document as described:

- For the **Add** action, key in ***R*** (run) at the Command field. Press [Enter]. The document status is displayed.

OR

- For the **Modify** action, the Batch Ticket screen is displayed. The message *No Error Detected* is displayed at the bottom of the screen. Key in ***RB*** (run batch) in the Command field. Press [Enter]. The message *All Documents Accepted* is displayed at the bottom of the Batch Ticket screen.

Performing Other Actions. For general instructions on canceling and deleting documents, see **Part 2, Using Documents**.

PART 7.

REPORTING

This Part Is Under Development.

PART 8.

FFIS TABLES

FFIS Tables Overview **8:7**
Data Entry And Reference Tables 8:15
Account Type Reference Table (ACCT) 8:17
Accounting Entries Definition Reference Table (ACED) 8:18
Accounting Entries Reference Table (ACEN) 8:20
Accounting Event Type Reference Table (ACEV) 8:22
Accounting Structure Code Cross-Reference Table (ACXT) 8:24
Automatic Document Numbering Table (ADNT) 8:26
Agency Reference Table (AGCY) 8:27
Accounting Period Cutoff Reference Table (APCT) 8:29
Debt Appeal Reference Table (APPL) 8:30
Accounting Period Reference Table (APRD) 8:32
Account Referral Destination Reference Table (ARDT) 8:34
Accounts Receivable Referral Parameter Table (AREP) 8:35
Accounts Receivable Control Options Reference Table (AROP) 8:36
Accounting Structure Code Reverse Cross-Reference Table (ARXT) 8:40
Accounting Structure Code Options Reference Table (AVOT) 8:42
Budget Object Code Reference Table (BOCT) 8:43
Calendar Date Reference Table (CLDT) 8:45
Text Clause Reference Table (CLTX) 8:46
FFIS Communication Response Table (COMR) 8:47
FFIS Communication Table (COMT) 8:49
Dates Table (DATE) 8:51
Document Tracking Data Entry Table (DCTE) 8:53
Treasury Disbursing Office Reference Table (DISB) 8:55
Discount Lost Reason Code Reference Table (DLRC) 8:57

Disbursing Options Reference Table (DOPT) . . . 8:58
Default Payment Text Reference Table (DPTX) . . . 8:61
Default Values Reference Table (DVAL) . . . 8:62
Default Values Options Reference Table (DVOT) . . . 8:65
Division Reference Table (DVSN) . . . 8:68
Fund Category Reference Table (FCAT) . . . 8:70
Fund Class Reference Table (FCLS) . . . 8:71
Fund Group Reference Table (FGRP) . . . 8:72
Fund Summary Group Definition Table (FSUM) . . . 8:73
Fund Treasury Symbol Reference Table (FSYM) . . . 8:74
Fiscal Year Reference Table (FSYR) . . . 8:76
File Transmission Verification Table (FTVT) . . . 8:78
Fund Type Reference Table (FTYP) . . . 8:79
Fund Reference Table (FUND) . . . 8:80
Fund Options Reference Table (FUN2) . . . 8:83
General Ledger Class Reference Table (GCLS) . . . 8:86
General Ledger Group Reference Table (GGRP) . . . 8:87
Generic Interface Document Cross-Reference Table (GIDT) . . . 8:88
General Ledger Account Reference Table (GLAC) . . . 8:90
Effective Transaction Type Definition Reference Table (GLTT) . . . 8:92
General Ledger Interactive Description System Code Crosswalk Table (GLXT) . . . 8:94
General Reporting Category Reference Table (GRPT) . . . 8:96
Guest Treasury Symbol Reference Table (GTSM) . . . 8:97
Interest Reason Code Reference Table (IRCT) . . . 8:98
Limits Reference Table (LIMT) . . . 8:99
Limit Dimensions Reference Table (LMDT) . . . 8:101
Outstanding Billing Documents Reference Table (OBDT) . . . 8:103
Federal Object Class (Object Category) Reference Table (OCAT) . . . 8:105
Object Class Reference Table (OCLS) . . . 8:106
On Demand Requisition Print Data Entry Table (ODRQ) . . . 8:107
Object Group Reference Table (OGRP) . . . 8:109
Organization Reference Table (ORGN) . . . 8:110
Object Type Reference Table (OTYP) . . . 8:112
Program Reference Table (PGMT) . . . 8:113
Prompt Pay Reference Table (PPAY) . . . 8:114
Prompt Pay Detail Table (PPDT) . . . 8:116
Prompt Pay Summary Table (PPST) . . . 8:118
Prompt Pay Summary Table – Screen 2 (PPS2) . . . 8:120
Prompt Pay Summary Table – Screen 3 (PPS3) . . . 8:122
PRCH To FFIS Vendor Cross Reference Table (PRXT) . . . 8:124
Revenue Category Reference Table (RCAT) . . . 8:126
Revenue Class Reference Table (RCLS) . . . 8:127
Recurring Journal Voucher And Standard Voucher Data Entry Table (REJV) . . . 8:128
Recurring Payment Voucher Data Entry Table (REPV) . . . 8:132

Report Literal Reference Table (RLIT) 8:135
Reporting Category Reference Table (RPTG) 8:136
Revenue Source Reference Table (RSRC) 8:137
Requisition Text Data Entry Table (RXTX) 8:139
Schedule Number Data Entry Table (SCHD) 8:140
Standard General Ledger Account Reference Table (SGLT) 8:141
Subsidiary Journal Definition Reference Table (SJDF) 8:142
System Control Options Reference Table (SOPT) 8:144
Source Data Reference Table (SRCE) 8:147
State Code Reference Table (STCT) 8:148
Tax Code Reference Table (TAXT) 8:149
Transaction Category Reference Table (TCAT) 8:151
Travel Description Reference Table (TDES) 8:154
Travel Default Values Table (TDFT) 8:156
Travel Expense Type Match Reference Table (TETM) 8:158
Travel Mode Reference Table (TMOD) 8:159
To/From Code Reference Table (TOFM) 8:161
PRCH Third Party Assignment Table (TPAT) 8:162
Travel Purpose Reference Table (TPRP) 8:164
Treasury Schedule Control Header Table (TSCH) 8:166
Treasury Schedule Control Rejection Reference Table (TSCR) 8:168
Travel Special Options Reference Table (TSPC) 8:170
Treasury Fund Reference Table (TSYF) 8:172
Treasury Symbol Reference Table (TSYM) 8:174
Travel Type Reference Table (TTYP) 8:176
Text Type Reference Table (TXTP) 8:178
Type Of Overpayment Reference Table (TYOP) 8:179
Voucher Tracking Data Entry Table (VCTE) 8:180
Feeder To FFIS Vendor Cross Reference Table (VCXT) 8:182
Vendor Reference Table (VEND) 8:183
Voided Checks Reference Table (VOID) 8:189
Vendor Reporting Reference Table (VRPT) 8:190
Voucher Text Data Entry Table (VTXT) 8:192
Vendor Type Reference Table (VTYP) 8:193
Write-Off Reason Code Reference Table (WORC) 8:195
Write-Off Reference Table (WROT) 8:196
Withholding Tax Allowance Reference Table (WTAT) 8:198
Year End Account Reference Table (YACT) 8:199
Year End Control Options Reference Table (YOPT) 8:201
Inquiry Tables 8:204
Accountable Document Inquiry Table (ACTI) 8:206
Allotment Inquiry Table (ALLT) 8:208
Allocation Inquiry Table (ALOC) 8:211
Allotment Status Inquiry Table (ALST) 8:214

Appropriation/Public Law Inquiry Table (APLT) 8:216
Apportionment Inquiry Table (APOR) 8:217
Appropriation Inquiry Table (APPR) 8:219
Accounts Receivable Case History Line Inquiry Table (ARCL) 8:222
Accounts Receivable Referral Inquiry Table (AREF) 8:224
Receivable Header Inquiry Table (ARHT) 8:226
Receivable Line Inquiry Table (ARLT) 8:229
Check Block Inquiry Table (CBLK) 8:231
Check Header Inquiry Table (CHKH) 8:232
Check Detail Inquiry Table (CHKL) 8:234
Cash Receipt Header Inquiry Table (CRHT) 8:235
Cash Receipts Line Inquiry Table (CRLT) 8:237
Check Summary Inquiry Table (CSUM) 8:239
Check/EFT Cancellation Inquiry Table (CXLT) 8:240
Document Tracking Inquiry Table (DCTI) 8:242
Document Cross Reference Inquiry Table (DXRF) 8:244
EFT Header Inquiry Table (EFTH) 8:246
EFT Detail Inquiry Table (EFTL) 8:248
Replace EFT Inquiry Table (ERPL) 8:250
Error Guide Inquiry Table (ERRG) 8:252
Fiscal Year Allocation Inquiry Table (FALC) 8:253
Fiscal Year Allotment Inquiry Table (FALT) 8:254
Fiscal Year Appropriation Inquiry Table (FAPP) 8:255
Fiscal Year Apportionment Inquiry Table (FAPR) 8:258
Fund Summary Group Appropriation Table (FSAP) 8:260
Fund Summary Group Available Balance Table (FSAV) 8:263
Fund Summary Group General Ledger Balance Inquiry Table (FSGL) 8:264
General Ledger Balance Inquiry Table (GLBL) 8:265
General Ledger Detail Balance Inquiry Table (GLDB) 8:267
Generic Schedule Control Header Inquiry Table (GSCH) 8:269
Generic Schedule Control Line Inquiry Table (GSCL) 8:270
Invoice – Payment Voucher – Check/EFT Cross-Ref Inquiry Table (IVCH) 8:272
Internal Voucher Inquiry Table (IVLT) 8:274
Journal Voucher And Standard Journal Inquiry Table (JVLT) 8:276
Monthly Summary General Ledger Balance Inquiry Table (MSGL) 8:278
Orders Header Inquiry Table (OBLH) 8:280
Purchase Order Accounting Line Inquiry Table (OBLL) 8:283
Object Revenue Class Inquiry Table (OBRV) 8:285
OTRS-FFIS Interface Document Inquiry Table (OIDT) 8:286
Pending Appropriation Inquiry Table (PAPP) 8:287
Voucher Holdback Inquiry Table (PVCH) 8:288
Voucher Header Inquiry Table (PVHT) 8:290
Voucher Line Inquiry Table (PVLT) 8:293
Receiver Header Inquiry Table (RCHT) 8:295

Receiver Accounting Line Inquiry Table (RCLA) 8:297
Checks Awaiting Replacement Inquiry Table (REPL) 8:299
Requisition Header Inquiry Table (REQH) 8:300
Requisition Accounting Line Inquiry Table (REQL) 8:302
Reprogramming Header Inquiry Table (RPGH) 8:304
Reprogramming Line Inquiry Table (RPGL) 8:306
Requisition Status Inquiry Table (RQST) 8:308
Self-Reversing Journal Voucher Inquiry Table (RVJV) 8:309
Suballotment Forward Reference Inquiry Table (SAFR) 8:310
Suballotment Inquiry Table (SAIN) 8:311
Suballotment Options Inquiry Table (SAOP) 8:313
Suballotment Spending Control Inquiry Table (SASP) 8:315
Suballotment Structure Inquiry Table (SAST) 8:318
Spending Control Document Summary Screen Table (SPDT) 8:319
Travel Advance Inquiry Table (TADV) 8:320
Travel Advance Header Inquiry Table (TAHT) 8:322
Travel Advance Line Inquiry Table (TALT) 8:324
Travel Interface Document Inquiry Table (TIDT) 8:326
TIN Number Cross Reference Inquiry Table (TINT) 8:328
Transportation Invoice Header Inquiry Table (TNHT) 8:329
Transportation Invoice Line Inquiry Table (TNLT) 8:331
Travel Order Header Inquiry Table (TOHT) 8:333
Travel Order Line Inquiry Table (TOLT) 8:335
Treasury Offset Entry Table (TOPT) 8:337
Allocation Totals Inquiry Table (TOTL) 8:338
Travel-Related Voucher Line Inquiry Table (TPLT) 8:339
Training Order Header Inquiry Table (TROH) 8:340
Treasury Schedule Control Line Inquiry Table (TSCL) 8:343
Travel Voucher Accounting Line Inquiry Table (TVAT) 8:345
Travel Voucher Header Inquiry Table (TVHT) 8:347
Payment Voucher Line – Check Number Cross-Reference Inquiry Table (VCHK) 8:349
Voucher Tracking Inquiry Table (VCTI) 8:350
Vendor Name Inquiry Table (VNAM) 8:352
Vendor Prior Calendar Year Disbursement Amount Inquiry Table (VPYA) 8:353
Payment Voucher Line – Disb Document Cross Reference Inquiry Table (VXDD) 8:354
Vendor Document Cross Reference Inquiry Table (VXRF) 8:356

FFIS Tables Overview

There are three types of tables in FFIS: reference, data entry, and inquiry. The reference tables are maintained by the Functional Administrator and are used by the table and document processors to define valid codes and system processing options, and format CAS records into FFIS records for further processing. Most of these tables are identified by the word "Reference" in the title. The Data Entry tables are used for simple transaction processing that does not require a document. The Inquiry tables are maintained by the system. They are updated by accepted documents or offline processes and store the results.

Note: If you are not authorized to perform a specific processing action (adding, changing, or deleting a record) in a table, contact your Functional Administrator responsible for Table Maintenance.

Also included in this section are tables that may be a part of the RD configuration but do not support any particular function (e.g., AGCY). Each table is briefly described below. Instructions for using each table are provided following these descriptions.

Note: The tables are divided into two sections with the same part number: (1) Data Entry and Reference Tables and (2) Inquiry Tables. Within each section, the tables are in alphabetical order by acronym and the pages are numbered in acronym order.

Data Entry and Reference Tables

Account Type Reference Table (ACCT). Used to define valid account type codes that are used during FFIS processing.

Accounting Entries Definition Reference Table (ACED). Used to determine a standard accounting entry ID for each type of accounting document.

Accounting Entries Reference Table (ACEN). Used to determine the debit and credit entries necessary for the accounting document.

Accounting Event Type Reference Table (ACEV). Used to identify the types of transactions that can be posted to the General Ledger.

Accounting Structure Code Cross Reference Table (ACXT). Used to validate the Accounting Structure Code (ASC) on feeder system transactions, return a formatted ASC to the feeder system based on an unformatted ASC and an Accounting Station, and crosswalk the fiscal year/agency/ASC combination (plus Accounting Station if specified on the AVOT) received from the feeder system to an FFIS accounting distribution and Sec1 code.

Automatic Document Numbering Table (ADNT). Used to automatically generate document numbers.

Agency Reference Table (AGCY). Used to define codes for the agencies represented in the system and maintains a mailing address for each defined agency.

Accounting Period Cutoff Reference Table Table (APCT). Used to obtain an accounting period that is unique for each feeder interface process.

Debt Appeal Reference Table (APPL). Used to define data related to appeals for waivers of debt payment.

Accounting Period Reference Table (APRD). Used to define accounting periods used in the system, determines if an accounting period is open or closed, and identify which accounting period (if any) is the year-end adjustment period.

Account Referral Destination Reference Table (ARDT). Used to identify the destinations available for referral and indicate if interest and penalty charges should continue to accrue for accounts referred to each location.

Accounts Receivable Referral Parameter Table (AREP). Used to define parameters relating to referring accounts for collection to outside agencies.

Accounts Receivable Control Options Reference Table (AROP). Used to define the controls and options for accounts receivable processing.

Accounting Structure Code Reverse Cross Reference Table (ARXT). Used to process FFIS data (i.e., data specified on an FFIS document or journal record) to existing feeder systems by crosswalking the FFIS Accounting Classification Code Structure to a formatted accounting structure, which is recognized by existing feeder systems, such as PROP or CADI.

Accounting Structure Code Options Reference Table (AVOT). Used to permit the interfaces and MASCVAL to determine if the accounting station is needed on the ACXT.

Budget Object Code Reference Table (BOCT). Used to define Budget Object Codes (BOCs) for specific items and services the government purchases and identify which codes stand for personnel-related or travel services, define which BOCs are used in establishing the budget, group similar BOCs into higher level classifications. BOCs can be grouped by class and category, define whether or not the BOC should be used to determine the accounting entries for posting to the General Ledger, and determine if the BOC on a document may be different than the BOC on the referenced document.

Calendar Date Reference Table (CLDT). Used to define valid calendar dates used on documents, in tables,

and as parameters and associate each calendar date with the appropriate accounting period.

Text Clause Reference Table (CLTX). Used to define the text of standard clauses used in printed documents. Text is stored in this table in the form of separate clauses. Each clause is identified individually. Text clauses may be associated with one or more text types in the TXTP. The text type is the code which is actually entered in the documents.

FFIS Communication Response Table (COMR). Used to allow the Departmentwide Standards Team and/or user-support staff to respond to client questions/ requests submitted through the COMT, and automatically log the respondent's user ID, date, and time.

FFIS Communication Table (COMT). Used to allow a user to log-in a request for a change to a common table, allow a user to request assistance relating to problems or questions about the system, and automatically log-in the requester's user ID, and the date and time of the question or request.

Dates Table (DATE). Used to store current date information for each document suspense transaction type.

Document Tracking Data Entry Table (DCTE). Used to enter specific documents tracked by FFIS. The documents are defined by transaction code and document number.

Treasury Disbursing Office Reference Table (DISB). Used to establish an identification code and name for each Treasury Disbursing Office and derive the agency location code for agencies to print their own checks.

Discount Lost Reason Code Reference Table (DLRC). Used to define a unique code and description for each reason that a discount was not taken on a given disbursement.

Disbursing Options Reference Table (DOPT). Used to identify system-wide options and default values used by the disbursements processes.

Default Payment Text Reference Table (DPTX). Used to record the text that is printed on a check when the Comments To Print field is blank in the payment voucher and there is no text in the VTXT.

Default Values Reference Table (DVAL). Used to define the default values that may be inferred from the codes entered on a document header or accounting line.

Default Values Options Reference Table (DVOT). Used to define how the DVAL is accessed and how the derived data elements on the accessed DVAL record is used and display an alternate view of the SOPT.

Division Reference Table (DVSN). Used to define codes for divisions and define options and controls, by division, for the Budget Execution, Planning, and Travel functions.

Fund Category Reference Table (FCAT). Used to define fund category codes and their attributes. Funds can be grouped into categories in the FUND.

Fund Class Reference Table (FCLS). Used to define fund class codes. Funds can be grouped into classes in the FUND.

Fund Group Reference Table (FGRP). Used to define fund group codes. Funds can be grouped in the FUND.

Fund Summary Group Definition Table (FSUM). Used to define fund summary groups for the purpose of summarizing data across multiple BFY/Funds.

Fund Treasury Symbol Reference Table (FSYM). Used to define valid fund Treasury symbols.

Fiscal Year Reference Table (FSYR). Used to define the accounting and budget fiscal years used in the system.

File Transmission Verification Table (FTVT). Used to define fund types that can be used to group similar funds for classification/sorting purposes on reports.

Fund Type Reference Table (FTYP). Used to define fund types that can be used to group similar funds for classification/sorting purposes on reports.

Fund Reference Table (FUND). Used to define codes for all funds used in the system and establish classification groupings that group similar funds together. Funds can be grouped into categories in the table.

Fund Options Reference Table (FUN2). Used to define budget and spending controls for each fund, define budgetary dimensions for each fund, initializes the fields in the AFND and the PFND. These tables are alternate views of the FUND. Also, used to provide options for updating the Fiscal Year Budget tables.

General Ledger Class Reference Table (GCLS). Used to define valid General Ledger class codes.

General Ledger Group Reference Table (GGRP). Used to define valid General Ledger group codes.

Generic Interface Document Cross-Reference Table (GIDT). Used to provide the users and the interface programs with a table that relates the transaction created in the feeder system with the FFIS document and line number.

General Ledger Account Reference Table (GLAC). Used to define General Ledger account codes for each asset, liability, equity, revenue, or budgetary (obligation, expense, etc.) account in your financial system and establish higher level classifications of the account

codes (class, category, and group), and associate a General Ledger account with an account type.

Effective Transaction Type Definition Reference Table (GLTT). Used to define the effective transaction types to be used when accounting documents require inferred transaction types.

General Ledger Interactive Description System Code Crosswalk Table (GLXT). Used to provide each interface with general ledger posting information in the form of a FFIS Transaction Code/Transaction Type combination. This allows the interfaces to accurately record the financial impact of each feeder system transaction in FFIS.

General Reporting Category Reference Table (GRPT). Used to define codes and associated descriptive names for general reporting category codes to be used for reporting purposes only.

Guest Treasury Symbol Reference Table (GTSM). Used to validate the interagency symbol entered on the SV or the DD.

Interest Reason Code Reference Table (IRCT). Used to define a unique code and description for each reason that interest was paid on a given disbursement.

Limits Reference Table (LIMT). Used to establish the ceiling or floor amount, the amount of funds budgeted against the ceiling or floor, and the available amount of ceiling or floor remaining, and establish ceilings and floors for Full Time Equivalents (FTEs) and dollars.

Limit Dimensions Reference Table (LMDT). Used to define the dimensions for ceilings and floors and allow twelve dimension combinations to be defined for each BFY or BFY/Fund combination.

Outstanding Billing Documents Reference Table (OBDT). Used to maintain a record of all outstanding billing documents.

Federal Object Class (Object Category) Reference Table (OCAT). Used to define Federal Object Class codes used for reporting.

Object Class Reference Table (OCLS). Used to define object classes used for reporting.

On Demand Requisition Print Data Entry Table (ODRQ). Used to print requisitions on request.

Object Group Reference Table (OGRP). Used to define object group codes to be used for reporting.

Organization Reference Table (ORGN). Used to define the organization codes and assign division/organization relationships, define an organization as a budget organization, cost organization, or both, define an organization as decentralized for travel order processing, default program codes used when processing documents for the organization, and define other organization-based options.

Object Type Reference Table (OTYP). Used to define object type codes used to group similar object codes together for reporting. Grouping of the object codes into the various types occurs in the BOCT.

Program Reference Table (PGMT). Used to define the 9-position Accounting Classification Code Structure (ACCS).

Prompt Pay Reference Table (PPAY). Used to establish the system processing rules for prompt payment and define interest and penalty rates for invoices paid late according to prompt payment requirements.

Prompt Pay Detail Table (PPDT). Used to enter prompt payment information for a given vendor invoice, which is used in the production of the Prompt Payment Report.

Prompt Pay Summary Table (PPST). Used to enter information for the Prompt Payment Report for a given fiscal quarter and disbursing office. This view is in conjunction with the PPS2 and PPS3 tables.

Prompt Pay Summary Table – Screen 2 (PPS2). Used to change information for the second part of the Prompt Payment Report.

Prompt Pay Summary Table – Screen 3 (PPS3). Used to change information for the third part of the Prompt Payment Report.

PRCH To FFIS Vendor Cross Reference Table (PRXT). Used by the PRCH-FFIS interface to identify vendors and their payment addresses by the PRCH Purchase Order Number. PRCH -FFIS interface uses the PRXT to cross reference a PRCH purchase order number to an FFIS vendor code. Each unique purchase order must be established on the PRXT to be properly cross referenced to an FFIS vendor code by the interface.

Revenue Category Reference Table (RCAT). Used to define revenue category codes used to group similar revenue sources. Grouping of revenue sources into categories occurs in the RSRC.

Revenue Class Reference Table (RCLS). Used to define revenue class codes used to group similar revenue sources. Grouping of revenue classes into categories occurs in the RSRC.

Recurring Journal Voucher and Standard Voucher Data Entry Table (REJV). Used to set up Journal and Standard vouchers that recur on a regular schedule (e.g.,monthly, or annually) and are standard in terms of their content.

Recurring Payment Voucher Data Entry Table (REPV). Used to provide information that the

system uses to automatically create payment voucher transactions on a regular basis (e.g., for monthly rent payments).

Report Literal Reference Table (RLIT). Used to store literal data that may be needed for one or more reports.

Reporting Category Reference Table (RPTG). Used to define the 2-position special purpose code.

Revenue Source Reference Table (RSRC). Used to define revenue sources, establish report groupings of the revenue source codes, and determine revenue source processing options.

Requisition Text Data Entry Table (RXTX). Used to define text associated with a requisition.

Schedule Number Data Entry Table (SCHD). Used to define agency schedule numbers used by the Automated Disbursements payment determination process.

Standard General Ledger Account Reference Table (SGLT). Used to define valid Standard General Ledger account codes.

Subsidiary Journal Definition Reference Table (SJDF). Used to allow the creation of up to 50 subsidiary journals, derived from daily document processing. These journals can be used for reporting purposes.

System Control Options Reference Table (SOPT). Used to provide a set of system-wide instructions for FFIS to use in determining which edits to perform and how to perform those edits when processing data, define whether or not the Project Cost Accounting function is used, and define cross-reference table defaults.

Source Data Reference Table (SRCE). Used to define valid sources of overpayments that can be used on the Billing document(s).

State Code Reference Table (STCT). Used to define the two-character state code abbreviations.

Tax Code Reference Table (TAXT). Used to define the various tax codes and categories used when determining whether relocation reimbursements qualify as taxable or nontaxable income and store data used when generating the Employee Moving Expense Information Report (IRS Form 4782).

Transaction Category Reference Table (TCAT). Used to group various transaction codes into a pre-defined and specific transaction category and indicate options for transaction codes regarding the document tracking, prompt pay, posting documents with a future accounting period, automatic printing for printable transactions (e.g., purchase and travel orders, billing documents), and required field edits.

Travel Description Reference Table (TDES). Used to define valid travel description codes and associated attributes.

Travel Default Values Table (TDFT). Used to establish default values for certain required fields in the TO.

Travel Expense Type Match Reference Table (TETM). Used to record and display the valid combinations of fiscal year, budget object code, travel type, and description code that may be used in travel documents and ensure that the description code is appropriate for the budget object code and travel type.

Travel Mode Reference Table (TMOD). Used to define valid travel mode codes and their descriptions.

To/From Code Reference Table (TOFM). Used to identify valid user-defined to/from codes and the person responsible for specific document tracking activities.

PRCH Third Party Assignment Table (**TPAT**). Used to store all third party vendor (such as a bank or the IRS) assignments alternate address code, name, and address.

Travel Purpose Reference Table (TPRP). Used to define valid travel purpose codes and indicate whether or not each code represents classified travel.

Treasury Schedule Control Header Table (TSCH). Used to record Treasury's confirmation of a schedule and show the current status of a schedule.

Treasury Schedule Control Rejection Reference Table (TSCR). Used to record Treasury's rejection of a schedule.

Travel Special Options Reference Table (TSPC). Used to establish the special options to be used in controlling travel processing.

Treasury Fund Reference Table (TSYF). Used to create Treasury symbols and display total budgetary resources by fund within appropriation symbol.

Treasury Symbol Reference Table (TSYM). Used to translate the Treasury symbol in the FUND into the Treasury symbol used for the Year-End Closing Statement (TFS 2108) and the SF-224 Statement Of Transactions. This table allows records recorded in the accounting year being closed to retain their individual budget year identity, while at the same time, records recorded for the same fund in the new accounting year may be included only in the "M" account.

Travel Type Reference Table (TTYP). Used to define valid travel type codes and indicate if travel orders using each travel type are issued centrally or decentrally, if a transfer authorization code is required, if a ticket can be charged against the travel type, and if tax can be withheld against the travel type.

Text Type Reference Table (TXTP). Used to relate a text type to one or more text clauses in the CLTX. The

table predefines a relationship among multiple clauses commonly used in documents.

Type Of Overpayment Reference Table (TYOP). Used to define valid overpayment types that can be used on the billing documents processed by FFIS.

Voucher Tracking Data Entry Table (VCTE). Used to enter specific vendor invoices and other payment documents to track by FFIS. The invoices and payment documents are defined by the payee code (vendor), invoice/ document number, and document date.

Feeder To FFIS Vendor Cross Reference Table (VCXT). Used to cross reference a vendor identifier defined in a feeder system to an FFIS vendor code.

Vendor Reference Table (VEND). Used to define codes for vendors, organizations, and persons to whom the government makes payments or from whom the Government collects receivables.

Voided Checks Reference Table (VOID). Used to list the check numbers of those checks that have been voided.

Vendor Reporting Reference Table (VRPT). Used to set reporting fields for vendors, organizations, and persons to whom the Government makes payments and collect receivables and displays an alternate view of the VEND.

Voucher Text Data Entry Table (VTXT). Used to associate lines of text with a specific voucher.

Vendor Type Reference Table (VTYP). Used to establish categories of vendor types (i.e., employee, Government, non-Government, and state Government).

Write-Off Reason Code Reference Table (WORC). Used to define write-off reason codes.

Write-Off Reference Table (WROT). Used to select billing documents to be written-off.

Withholding Tax Allowance Reference Table (WTAT). Used to record the amount of Withholding Tax Allowance (WTA) and Relocation Income Tax Allowance (RITA) by employee and calendar year.

Year End Account Reference Table (YACT). Used to define the accounts into which a given general ledger account should be closed, define which general ledger accounts should be reinstated, define the general ledger accounts for which closing, beginning balance, and reinstatement transactions should be posted using a full accounting distribution, and define which general ledger accounts should be included when computing carryover/expired amounts, and identify whether the account should be added or subtracted for this calculation.

Year End Control Options Reference Table (YOPT). Used to specify the default closing accounts and options.

FFIS Inquiry Tables

Accountable Document Inquiry Table (ACTI). Used to view specific information about the status of the following documents that are being tracked by FFIS: Voucher And Schedule Of Payments (SF-1166), Voucher And Schedule Of Payments (Continuation Sheet) (SF-1167), and Government Transportation Request (GTR).

Allotment Inquiry Table (ALLT). Used to view information about the allotment budget level and each allotment budget line, each budget line's accounting distribution and budgeted amounts, commitment, obligation, and expenditure amounts, and estimated and actual reimbursements for each allotment line.

Allocation Inquiry Table (ALOC). Used to view information about the allocation budget level and each allocation budget line, each budget line's accounting distribution and budgeted amounts, commitment, obligation, and expenditure amounts, and estimated and actual reimbursements for each allocation line.

Allotment Status Inquiry Table (ALST). Used to view a year-to-date status of budget and spending activity for multiple allotments and fund availability for each allotment line.

Appropriation/Public Law Inquiry Table (APLT). Used to view information about appropriations by public law, the public law identifier, the warrant number, the approval date, and the appropriation amount.

Apportionment Inquiry Table (APOR). Used to view the status of apportionments, the total budget authority for the apportionment, pending and approved amounts by quarter, deferred amounts, and year-to-date commitment, obligation, and expenditure amounts.

Appropriation Inquiry Table (APPR). Used to view the status of an appropriation, appropriation amounts, apportionment and allocation or allotment totals, committed, obligated, and expended amounts, and depending adjustments for expired appropriations.

Accounts Receivable Case History Line Inquiry Table (ARCL). Used to view detailed history information for each receivable that has a Case History flag in the ARHT set to ***Y***.

Accounts Receivable Referral Inquiry Table (AREF). Used to view receivables eligible for referral and the current outstanding amount for this receivable, the date the account became delinquent, and the last date a payment was made against this account.

Receivable Header Inquiry Table (ARHT). Used to view the summary information of all outstanding and some recently closed Accounts Receivable function documents.

Receivable Line Inquiry Table (ARLT). Used to view detailed accounting information about all outstanding and closed Billing document and Transportation Billing document lines.

Check Block Inquiry Table (CBLK). Used to view the range of checks issued by fiscal year, month, and batch number for agencies printing their own checks and the range of checks that was reported to Treasury for the time period and batch number. It also provides the total amount of the checks within that range.

Check Header Inquiry Table (CHKH). Used to view information about checks that are generated, such as the check number, payee's name and address, and the amount of the check.

Check Detail Inquiry Table (CHKL). Used to view voucher information that comprises the dollar total for a check and each voucher used to produce a single check amount.

Cash Receipt Header Inquiry Table (CRHT). Used to view summary information from cash receipt documents.

Cash Receipts Line Inquiry Table (CRLT). Used to view detailed information relating to a specific receipt of cash and accounting distribution information, the dollar amount received, and reference information (if applicable) for each receipt in the table.

Check Summary Inquiry Table (CSUM). Used to view the total amount of checks in the range.

Check/EFT Cancellation Inquiry Table (CXLT). Used to view the status of checks and EFT payments canceled using the CX and a record of Treasury's confirmation of cancellation and the request to backout a previously posted cancellation.

Document Tracking Inquiry Table (DCTI). Used to view information about documents being tracked by FFIS.

Document Cross Reference Inquiry Table (DXRF). Used to view information about all documents associated with the document entered in the header line if the Use Doc XRef Table option in the SOPT is ***Y***.

EFT Header Inquiry Table (EFTH). Used to view schedule information, EFT payment sequence number, payee's name and address; and the amount of the payment for all processed EFT payments.

EFT Detail Inquiry Table (EFTL). Used to view information about each payment voucher disbursed by EFT that comprises the total dollar amount for a payment.

Replace EFT Inquiry Table (ERPL). Used to view all EFT payments canceled for replacement that have not yet been replaced by the Automated Disbursements process and schedule information, EFT payment number, payee's name, and the amount of the check.

Error Guide Inquiry Table (ERRG). Used to view descriptions of problems and the solution for errors encountered while processing tables and documents.

Fiscal Year Allocation Inquiry Table (FALC). Used to view information about budget line's accounting distribution, the budgeted amounts, and the committed, obligated, and the expended amounts by fiscal year.

Fiscal Year Allotment Inquiry Table (FALT). Used to view information about each budget line's accounting distribution, budgeted amounts, and the committed, obligated, and the expended amounts by fiscal year.

Fiscal Year Appropriation Inquiry Table (FAPP). Used to view information about the status of an appropriation by fiscal year, appropriation amounts, apportionment, and allocation or allotment totals, commitment, obligation, and expenditure amounts, and spending adjustments for expired appropriations.

Fiscal Year Apportionment Inquiry Table (FAPR). Used to view information about the status of an apportionment by fiscal year, the total budget authority for the apportionment, pending and approved apportionment amounts by quarter, deferred amounts, and quarterly and total commitment, obligation, and expended amounts.

Fund Summary Group Appropriation Table (FSAP). Used to view summarized accounting information for each fund summary group and available appropriated and apportioned amounts for current and prior budget fiscal year(s) for each fund summary group.

Fund Summary Group Available Balance Table (FSAV). Used to view information about available balance for each fund summary group.

Fund Summary Group General Ledger Balance Inquiry Table (FSGL). Used to view accounting information for each fiscal year and fund summary group combination by general ledger account.

General Ledger Balance Inquiry Table (GLBL). Used to view General Ledger account balances. These balances reflect all posted transactions affecting GL accounts within the accounting fiscal year.

General Ledger Detail Balance Inquiry Table (GLDB). Used to view General Ledger account balances at the fiscal year, fund, GL account, division,

organization, cost organization, program, budget object code or revenue source, account type, transaction ID, transaction date, fiscal month, and reference document ID levels.

Generic Schedule Control Header Inquiry Table (GSCH). Used to store the control total for GVTS invoice payments.

Generic Schedule Control Line Inquiry Table (GSCL). Used to indicate which G2 documents corresponding to transactions on a GVTS invoice have been accepted into FFIS.

Invoice – Payment Voucher – Check/EFT Cross-Ref Inquiry Table (IVCH). Used to view information that links the vendor invoice to the voucher lines, and the associated check or payment number and the vendor invoice amount and date, the voucher amount and date, and the check or payment number and date.

Internal Voucher Inquiry Table (IVLT). Used to view summary information about IVs and information about the buyer's and seller's accounting distributions.

Journal Voucher And Standard Journal Inquiry Table (JVLT). Used to view journal voucher and standard journal line information.

Monthly Summary General Ledger Balance Inquiry Table (MSGL). Used to view General Ledger account balances at the fiscal year, fund, GL account, division, organization, program, budget object code or revenue source, reporting category, and fiscal month level.

Orders Header Inquiry Table (OBLH). Used to view information about each outstanding or recently closed purchase order document (i.e., MO).

Purchase Order Accounting Line Inquiry Table (OBLL). Used to view line-level accounting information about each outstanding or recently closed order.

Object Revenue Class Inquiry Table (OBRV). Used to view information on valid budget object codes and revenue source codes grouped by class. It is used in the PBDF expansion process for pool and base records which have been defined using object or revenue class as part of the key.

OTRS-FFIS Interface Document Inquiry Table (**OIDT).** Used to view transactions through FFIS using identified key fields from the 480-character record that corresponds to the billing information generated by the GOALS system (bill-number, accomplished-date, and agency). This information enables the researcher to trace the corresponding FFIS document to determine whether it was successfully processed.

Pending Appropriation Inquiry Table (PAPP). Used to view information on pending and approved appropriation warrant amounts, public law and warrant number, and the President's budget amount.

Voucher Holdback Inquiry Table (PVCH). Used to view details about contract holdbacks and information from the PV lines that contain a line type of ***H***.

Voucher Header Inquiry Table (PVHT). Used to view summary information about outstanding and closed PVs for the following transaction categories: ***DD*** = Direct Disbursement, ***PV*** = Payment Voucher.

Voucher Line Inquiry Table (PVLT). Used to view details about outstanding and closed voucher lines.

Receiver Header Inquiry Table (RCHT). Used to view details about a receipt of goods ordered, such as: date, receiver, and carrier.

Receiver Accounting Line Inquiry Table (RCLA). Used to view detailed accounting line information about each outstanding or recently closed RC.

Checks Awaiting Replacement Inquiry Table (REPL). Used to view all checks canceled for replacement that have not yet been replaced through the Automated Disbursements function and the check number, payee's name, and the amount of the check.

Requisition Header Inquiry Table (REQH). Used to view information about open and recently closed requisitions, such as: vendor and delivery date.

Requisition Accounting Line Inquiry Table (REQL). Used to view information about outstanding and recently closed requisitions. This table displays information about original amounts; as well as, obligated amounts for each requisition.

Reprogramming Header Inquiry Table (RPGH). Used to view information about reprogrammings and the justification for the reprogramming.

Reprogramming Line Inquiry Table (RPGL). Used to view accounting information about reprogramming "to" and "from" a budget and reprogramming amount and type of resource that was reprogrammed.

Requisition Status Inquiry Table (RQST). Used to view the information about the status of each line of a requisition.

Self-Reversing Journal Voucher Inquiry Table (RVJV). Used to view the reversing JVs and SVs.

Suballotment Forward Reference Inquiry Table (SAFR). Used to view the forward references for each parent allotment and suballotment.

Suballotment Inquiry Table (SAIN). Used to view one entry for each suballotment, with level indicators showing where each suballotment exists in the suballotment hierarchy.

Suballotment Options Inquiry Table (SAOP). Used to view one entry for each allotment identifying the various options selected for its suballotments.

Suballotment Spending Control Inquiry Table (SASP). Used to view information about the suballotment spending control edits and entries for each suballotment with no reference to suballotment hierarchies.

Suballotment Structure Inquiry Table (SAST). Used to view a line of each suballotment in the system. It represents the backup rollup references of a suballotment hierarchy which are necessary for calculating amount aggregations for the SAIN.

Spending Control Document Summary Screen Table (SPDT). Used to view a list of total from the SPDX at the BOC level.

Travel Advance Inquiry Table (TADV). Used to view a list of travel advance activity for each employee by travel type.

Travel Advance Header Inquiry Table (TAHT). Used to view a list of travel advance balances for each employee by travel type.

Travel Advance Line Inquiry Table (TALT). Used to view detailed information associated with a travel advance transaction.

Travel Interface Document Inquiry Table (TIDT). Used to view FFIS documents using key information about specific travel transactions. This information enables the researcher to trace the corresponding FFIS document and line number that was processed. This table is updated by the same interface programs that generates the travel documents.

TIN Number Cross Reference Inquiry Table (TINT). Used to view information about taxpayer identification numbers and associated vendor codes and vendor names.

Transportation Invoice Header Inquiry Table (TNHT). Used to view summary-level data for transportation invoice documents.

Transportation Invoice Line Inquiry Table (TNLT). Used to view the detail ticket and accounting information for transportation invoice documents.

Travel Order Header Inquiry Table (TOHT). Used to view summary information about travel orders.

Travel Order Line Inquiry Table (TOLT). Used to view detailed information about travel orders.

Treasury Offset Entry Table (TOPT). Used to record and track offset payment information received from Treasury.

Allocation Totals Inquiry Table (TOTL). Used to view information on the total base amounts and percentages needed to compute the allocated amounts for the group/step.

Travel-Related Voucher Line Inquiry Table (TPLT). Used to view cross-reference information for travel-related payment voucher documents.

Training Order Header Inquiry Table (TROH). Used to view information about each outstanding or recently closed training order document.

Treasury Schedule Control Line Inquiry Table (TSCL). Used to view information that links a schedule to the voucher lines that appear on the schedule and the payment sequence or check numbers assigned to the payments on the schedule and the processing status of the schedule and payment lines on the schedule.

Travel Voucher Accounting Line Inquiry Table (TVAT). Used to view detail travel expense information, from the travel voucher, travel–related payment voucher, and travel expense imprest fund reimbursements.

Travel Voucher Header Inquiry Table (TVHT). Used to view summary data from the travel voucher, travel related payment voucher and, travel expense lines in the imprest fund reimbursement document.

Payment Voucher Line – Check Number Cross-Reference Inquiry Table (VCHK). Used to view information that links voucher lines to the associated check number and the payment amount and check number.

Voucher Tracking Inquiry Table (VCTI). Used to view information about invoices being tracked by FFIS.

Vendor Name Inquiry Table (VNAM). Used to view all the vendors identified in the system by vendor name and vendor code if the Vendor Table Updates Vndr Name Tbl option in the SOPT is ***Y.***

Vendor Prior Calendar Year Disbursement Amount Inquiry Table (VPYA). Used to view total dollar amounts of disbursements for the prior calendar year by vendor for 1099 vendors only.

Payment Voucher Line – Disb Document Cross Reference Inquiry Table (VXDD). Used to view information that links voucher lines to the associated Treasury schedules on which the vouchers appear and payment amount and schedule status.

Vendor Document Cross Reference Inquiry Table (VXRF). Used to view information on all the documents that refer to a given vendor if the Use Vendor XRef Table option in the SOPT is ***Y*** and the document number, acceptance date, and total amount for each document.

Instructions follow for using each table.

Data Entry And Reference Tables

Account Type Reference Table (ACCT)

The ACCT is used to define valid account type codes that are used during FFIS processing.

To access the ACCT, at the FFS screen, key in ***N*** at the Action field and ***ACCT*** at the TableID field, then press [Enter]. The ACCT screen (**Figure 8:1**) is displayed with an ***S*** in the Action field.

Instructions for adding are discussed below.

Note: If you are not authorized to perform a specific processing action (adding, changing, or deleting a record) in this table, contact your Functional Administrator responsible for Table Maintenance.

Adding A Record. At the ACCT screen, complete the fields as follows:

[1] **Action** *(required, alpha field; 1 position)*. Key in ***A***.

[2] **TableID** (*no-entry*). Displays ***ACCT***.

[3] **UserID** (*no-entry*). Displays the user ID.

[4] **Account Type** 🔑 *(required, numeric field; 2 positions)*. Key in the pre-defined account type codes.

[5] **Prohibit Input Flag** *(required, alpha field; 1 position)*. Key in ***Y*** for *yes* or ***N*** for *no* to restrict entering the account type codes in any document.

[6] **Name** *(optional, alphanumeric field; max. of 30 positions)*. Key in the descriptive name for the account type.

[7] **Short Name** *(optional, alphanumeric field; max. of 12 positions)*. Key in an abbreviated description used in reports when there is not enough room for the full name.

After keying in the data, press [Enter]. All records (lines) that are error-free or tagged with warning messages are added; records that contain either overrideable or fatal errors are not added. The message *All Lines Added* is displayed at the bottom of the screen to indicate that all or some records have been added; if any records contain errors, error messages are also displayed. For more information about error messages and correcting errors, see **Part 2, System Edits**.

- To add another record, repeat the above process.

Performing Other Actions. For instructions on displaying, changing, and deleting a record, or performing any other action, see **Part 2, Using Tables**.

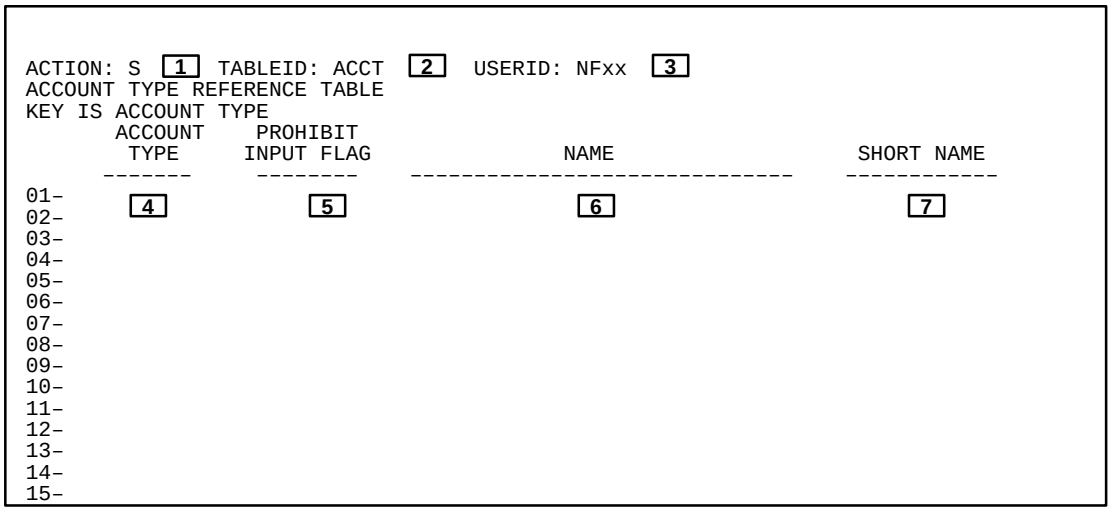

Figure 8:1. Account Type Reference Table (ACCT)

Accounting Entries Definition Reference Table (ACED)

The ACED is used to determine a standard accounting entry ID for each type of accounting document.

To access the ACED, at the FFS screen, key in ***N*** at the Action field and ***ACED*** at the TableID field, then press [Enter]. The ACED screen (**Figure 8:2**) is displayed with an ***S*** in the Action field.

Instructions for adding are discussed below.

Note: If you are not authorized to perform a specific processing action (adding, changing, or deleting a record) in this table, contact your Functional Administrator responsible for Table Maintenance.

Adding A Record. At the ACED screen, complete the fields as follows:

1 **Action** *(required, alpha field; 1 position)*. Key in ***A***.

2 **TableID** (*no-entry*). Displays ***ACED***.

3 **UserID** (*no-entry*). Displays the user ID.

4 **FY** *(optional, numeric field; 2 positions)*. Key in the last 2 digits of the budget fiscal year to which this document belongs. See the FSYR for valid fiscal years.

5 **Trans Code** *(required, alpha field; 2 positions)*. Key in the transaction code for the document being processed, such as ***PV*** for Payment Voucher.

6 **Trans Type** *(optional, alphanumeric field; 2 positions)*. Key in the transaction type describing the accounting events that should be recorded for this line.

7 **Vendor Catg/Type** *(optional, alphanumeric field; 1 position)*. Key in the vendor type or category to be associated with this accounting entry ID if vendor type or category posting is being used for this transaction code. See VTYP for valid vendor types.

8 **BOC/RSRC** *(optional, alphanumeric field; 4 positions)*. Key in the BOC or revenue source code that applies to this accounting entry ID if this transaction can have BOC-specific or revenue source-specific posting. See BOCT for valid budget object codes or RSRC for valid revenue source codes.

9 **Project Post Type** *(optional, alphanumeric field; 2 positions)*. Key in a code that identifies this as a special entry for project-specific accounting posting. The common posting routine uses the GL post flag entered in the PROJ to match the entry here if the project post flag in the ACEV is ***Y*** for the accounting event.

10 **Fund Catg** *(optional, alphanumeric field; 2 positions)*. Key in the fund category that applies to this accounting entry ID if this transaction can have fund category-specific posting (determined by the value of the fund category post flag in the ACEV and the FCAT).

11 **Accounting Entry ID** *(required, alphanumeric field; 4 positions)*. Key in the accounting entry ID for this accounting model and event. It is used to access the ACEN.

```
ACTION: S  1   TABLEID: ACED  2   USERID: NFxx  3
ACCOUNTING ENTRIES DEFINITION REFERENCE TABLE
KEY IS FY, TRANS CODE, TRANS TYPE, VENDOR CATG/TYPE, BOC/RSRC,
       PROJECT POST TYPE, FUND CAT
                          VENDOR                                          PROMPT
         TRANS  TRANS     CATG/    BOC/     PROJECT   FUND  ACCOUNTING    PAY
    FY   CODE   TYPE      TYPE     RSRC    POST TYPE  CATG   ENTRY ID     FLAG
    --   ----   ----     ------   ------   ---------  ----  ----------   ------
01- 4    5      6         7        8        9         10     11           12
                DESCRIPTION: 13
02-
                DESCRIPTION:
03-
                DESCRIPTION:
04-
                DESCRIPTION:
05-
                DESCRIPTION:
06-
                DESCRIPTION:
```

Figure 8:2. Accounting Entries Definition Reference Table (ACED)

12 **Prompt Pay Flag** *(optional, alpha field; 1 position).* Key in ***Y*** if the documents referencing this accounting entries definition record are subject to prompt payment rules. This is used in conjunction with prompt pay flags in the VTYP and the TCAT to determine when a document is subject to prompt payment. The prompt pay flag must be ***Y*** in all three tables for a document to be subject to prompt payment.

13 **Description** *(optional, alphanumeric field; max. of 30 positions).* Key in a description of the documents referenced by this accounting entries definition record.

After keying in the data, press [Enter]. All records (lines) that are error-free or tagged with warning messages are added; records that contain either overrideable or fatal errors are not added. The message *All Lines Added* is displayed at the bottom of the screen to indicate that all or some records have been added; if any records contain errors, error messages are also displayed. For more information about error messages and correcting errors, see **Part 2, System Edits**.

- To add another record, repeat the above process.

Performing Other Actions. For instructions on displaying, changing, and deleting a record, or performing any other action, see **Part 2, Using Tables**.

Accounting Entries Reference Table (ACEN)

The ACEN is used to determine the debit and credit entries necessary for accounting document.

To access the ACEN, at the FFS screen, key in ***N*** at the Action field and ***ACEN*** at the TableID field, then press [Enter]. The ACEN screen (**Figure 8:3**) is displayed with an ***S*** in the Action field.

Instructions for adding are discussed below.

Note: If you are not authorized to perform a specific processing action (adding, changing, or deleting a record) in this table, contact your Functional Administrator responsible for Table Maintenance.

Adding A Record. At the ACEN screen, complete the fields as follows:

[1] **Action** *(required, alpha field; 1 position)*. Key in ***A***.

[2] **TableID** (*no-entry*). Displays ***ACEN***.

[3] **UserID** (*no-entry*). Displays the user ID.

[4] **Fiscal Year** 🔑 *(required, numeric field; 2 positions).* Key in the last 2 digits of the associated budget fiscal year for the document. See the FSYR for valid fiscal years.

[5] **Accounting Entry ID** 🔑 *(required, alphanumeric field; 4 positions).* Key in the accounting entry ID for this accounting model and event. It is used to access the ACEN.

[6] **Accounting Event Type** *(required, alphanumeric field; 4 positions).* Key in the accounting event type that describes this set of debits and credits. The type entered must be valid in the ACEV.

[7] **Sequence Number** 🔑 *(required, numeric field; 4 positions).* Key in the sequence number that identifies and permits multiple records for each accounting entry ID.

[8] **Journal Code** *(required, alpha field; 4 positions).* Key in the journal code that identifies the detailed journal file to which the debits and credits are posted. Valid values are:

GENJ	=	General Journal
MEMO	=	Memo Journal
NULL	=	No General Ledger updates

[9] **Increase Line D/C** *(required, alpha field;1 position).* Key in one of the following codes:

C	=	Indicates a budget or revenue transaction
D	=	Indicates all other transactions.

This field is used together with the FIP (**Field 17**) to indicate whether the fixed asset is a debit or credit account.

[10] **Debit Acct** *(conditional, numeric field; 4 positions).* If this is a General Journal entry, key in the debit account, which is the General Ledger account to which a debit should be posted for the indicated accounting document. If this is a Memo Journal entry (**Field 8**), this field is optional.

[11] **Debit Type** *(no-entry).* Displays the debit account type which is derived from the GLAC based on the debit account code entered.

```
ACTION: S [1]   TABLEID: ACEN [2]    USERID: NFxx [3]
ACCOUNTING ENTRIES REFERENCE TABLE
KEY IS FISCAL YEAR, ACCOUNTING ENTRY ID, SEQUENCE NUMBER
    FISCAL YEAR: [4]   ACCOUNTING ENTRY ID:  [5]   ACCOUNTING EVENT TYPE: [6]
    SEQUENCE  JOURNAL  INCREASE  ----- DEBIT ------ ----- CREDIT -----  FLAGS
     NUMBER    CODE    LINE D/C  ACCT TYPE OVERRIDE ACCT TYPE OVERRIDE REV FIP
    --------  -------  --------  ---- ---- -------- ---- ---- -------- --- ---
01-  [7]      [8]      [9]      [10] [11]   [12]   [13] [14]   [15]   [16] [17]
02-
03-
04-
05-
06-
07-
08-
09-
10-
11-
12-
13-
14-
15-
```

Figure 8:3. Accounting Entries Reference Table (ACEN)

12 **Debit Override** *(optional, alpha field;1 position).* Key in ***Y*** to specify that the debit account may be overridden by a user entering an account on a screen or through logic in the program. Key in ***N*** to prohibit the user from overriding this account in the document.

13 **Credit Acct** *(conditional, numeric field; 4 positions).* If this is a General Journal entry, key in the credit account, which is the General Ledger account to which a credit should be posted for the indicated accounting document. If this is a Memo Journal entry this field is optional.

14 **Credit Type** *(no-entry).* Displays the credit account type which is derived from the GLAC based on the credit account code entered.

15 **Credit Override** *(optional, alpha field; 1 position).* Key in ***Y*** to specify that the credit account may be overridden by a user entering an account on a screen or through logic in the program. Key in ***N*** to prohibit the user from overriding this account in the document.

16 **Rev Flag** *(optional, alpha field; 1 position).* Key in one of the following codes:

Y = Entries posted at the time the referenced transaction was posted are reversed out by the reversing document.

N = No automated reversal of transactions takes place.

17 **FIP Flag** *(optional, alpha field; 1 position).* Key in ***Y*** for *yes* or ***N*** for *no* to indicate that the debit account or the credit account, as indicated by the increase line indicator, is a fixed asset, inventory, or a prepaid expense account.

After keying in the data, press [Enter]. All records (lines) that are error-free or tagged with warning messages are added; records that contain either overrideable or fatal errors are not added. The message *All Lines Added* is displayed at the bottom of the screen to indicate that all or some records have been added; if any records contain errors, error messages are also displayed. For more information about error messages and correcting errors, see **Part 2, System Edits**.

- To add another record, repeat the above process.

Performing Other Actions. For instructions on displaying, changing, and deleting a record, or performing any other action, see **Part 2, Using Tables**.

Accounting Event Type Reference Table (ACEV)

The ACEV is used to identify the types of transactions that can be posted to the General Ledger.

To access the ACEV, at the FFS screen, key in ***N*** at the Action field and ***ACEV*** at the TableID field, then press [Enter]. The ACEV screen (**Figure 8:4**) is displayed with an ***S*** in the Action field.

Instructions for adding are discussed below.

Note: If you are not authorized to perform a specific processing action (adding, changing, or deleting a record) in this table, contact your Functional Administrator responsible for Table Maintenance.

Adding A Record. At the ACEV screen, complete the fields as follows:

[1] **Action** *(required, alpha field; 1 position)*. Key in ***A***.

[2] **TableID** (*no-entry*). Displays ***ACEV***.

[3] **UserID** (*no-entry*). Displays the user ID.

[4] **Accounting Event** 🔑 *(required, alphanumeric field; 4 positions).* Key in a pre-defined accounting event type code.

[5] **Post Flag VEND** *(optional, alpha field; 1 position).* Key in ***Y*** if this accounting event is subject to vendor posting.

[6] **Post Flag BOC/RSRC** *(optional, alpha field; 1 position).* Key in ***Y*** if the accounting events should use budget object code or revenue source posting. When accessing the ACED, this field is used in conjunction with the BOC Post Flag in the BOCT or the Rev Srce Post (flag) in the RSRC.

[7] **Post Flag Proj** *(optional, alpha field; 1 position)* Key in ***Y*** if this accounting event should use the GL Post Type in the PROJ when accessing the ACED. Use of this flag allows project-specific accounting posting.

[8] **Post Flag FCAT** *(optional, alpha field; 1 position).* Key in ***Y*** if this accounting event should use the fund category in the FUND when accessing the ACED. This field is used in conjunction with the Fund Cat Post Flag in the FCAT.

[9] **Reqd Field** *(optional, alpha field; 1 position).* Key in ***Y*** if the accounting event, along with the transaction category, should perform required accounting field edits as specified in the PFND.

[10] **Description** *(optional, alphanumeric field; max. of 30 positions).* Key in the description of the accounting event type being defined in this table.

```
ACTION: S [1]    TABLEID: ACEV [2]   USERID: NFxx [3]
    ACCOUNTING EVENT TYPE REFERENCE TABLE
    KEY IS ACCOUNTING EVENT
H-  ACCOUNTING  ----- POST FLAGS ------  REQD
      EVENT     VEND BOC/RSRC PROJ FCAT  FIELD       DESCRIPTION
    ----------  ---- -------- ---- ----  ----- ------------------------------
01-    [4]       [5]   [6]     [7]  [8]   [9]           [10]
02-
03-
04-
05-
06-
07-
08
09-
10-
11-
12-
13-
14-
15-
```

Figure 8:4. Accounting Event Type Reference Table (ACEV)

After keying in the data, press [Enter]. All records (lines) that are error-free or tagged with warning messages are added; records that contain either overrideable or fatal errors are not added. The message *All Lines Added* is displayed at the bottom of the screen to indicate that all or some records have been added; if any records contain errors, error messages are also displayed. For more information about error messages and correcting errors, see **Part 2, System Edits**.

- To add another record, repeat the above process.

Performing Other Actions. For instructions on displaying, changing, and deleting a record, or performing any other action, see **Part 2, Using Tables**.

Accounting Structure Code Cross-Reference Table (ACXT)

The ACXT is used to:

- Validate the Accounting Structure Code (ASC) on feeder system transactions.
- Return a formatted ASC to the feeder system based on an unformatted ASC and an Accounting Station.
- Crosswalk the fiscal year/agency/ASC combination (plus Accounting Station if specified on AVOT) received from the feeder system to an FFIS accounting distribution and Sec1 code.

For example: RD enters the agency/subagency on documents created in the feeder systems with an alpha indicator in the seventh position, if applicable, to identify documents that should be processed against prior year authority. The ACXT validates the accounting entered and returns to the feeder systems the formatted accounting which is the fiscal year, the agency/division/organization, and the management code.

To access the ACXT, at the FFS screen, key in ***N*** at the Action field and ***ACXT*** at the TableID field, then press [Enter]. The ACXT screen (**Figure 8:5**) is displayed with an ***S*** in the Action field.

Instructions for adding are discussed below.

Note: If you are not authorized to perform a specific processing action (adding, changing, or deleting a record) in this table, contact your Functional Administrator responsible for Table Maintenance.

Adding A Record. At the ACXT screen, complete the fields as follows:

[1] **Action** *(required, alpha field; 1 position)*. Key in ***A***.

[2] **TableID** (*no-entry*). Displays ***ACXT***.

[3] **UserID** (*no-entry*). Displays the user ID.

[4] **FY** *(required, numeric field; 2 positions)*. Key in the last 2 digits of the fiscal year for which the accounts and options are defined. See the FSYR for a valid fiscal year.

[5] **Agency** (*required, alphanumeric field; max. of 4 positions*). Key in the identifying code of the agency for which the record is associated. See the AGCY for valid agency codes.

[6] **Accounting Station** (*conditional, numeric field; 4 positions*). If the Use Accounting Station field on the AVOT is ***Y***, key in the accounting station associated with an accounting structure code. If the Use Accounting Station field on the AVOT is ***N***, leave blank.

[7] **ASC1 (***required, alphanumeric field; max. of 35 positions*). Key in the accounting structure code.

[8] **ASC2** (*optional, alphanumeric field; max. of 35 positions*). Key in the formatted accounting structure code for agencies that format the entered accounting structure code. This field contains a value if the record is a user-entered record used for validation and cross-walking from the unformatted accounting structure code to the formatted accounting structure code.

[9] **User-Entered Record?** (*no-entry*). Displays ***Y*** to indicate user can edit the record. Displays ***N*** to indicate user cannot edit the record.

```
ACTION: S [1] TABLEID: ACXT [2] USERID: NFxx    [3]
 ACCOUNTING STRUCTURE CODE CROSS-REFERENCE TABLE
 KEY IS FY, AGENCY, ACCOUNTING STATION, ASC1

 FY: [4] AGENCY: [5]
 ACCOUNTING STATION: [6]
 ------------------ACCOUNTING STRUCTURE CODE-----------------
 ASC1:  [7]
 ASC2:  [8]
 USER-ENTERED RECORD?: [9]

 -------------------------FFIS ACCS--------------------------
 SEC1: [10]
 BFYS: [11]            FUND: [12]          DIVISION: [13]
 BUDGET ORG/SUB: [14][15]                  COST ORG/SUB: [16][17]
 PROGRAM: [18]         JOB: [19]           RPTG:   [20]
 SUB BOC: [21]         SUB REV SRC: [22]
 CLOSED BFYS: [23]                         CLOSED FUND: [24]
```

Figure 8:5. Accounting Structure Code Cross-Reference Table (ACXT)

10 **Sec1 (***optional, alphanumeric field; 2 positions*). Key in the security code used when building FFIS documents as part of the document identifier. This is the same value as the division code (**Field 13**), the division associated with the organization code (**Field 16**), or the division derived from the DVAL.

11 **BFYs (***optional, alphanumeric field; 2 positions*). Key in the last 2 digits of the beginning budget fiscal year and/or key in the last 2 digits of the ending fiscal year in which money is available for a given appropriation. See the FSYR for valid fiscal year(s).

12 **Fund (***optional, alphanumeric field; max. of 3 positions*). Key in the fund associated with and related to the Treasury symbol. See the FUND for valid fund codes.

13 **Division (***optional, alphanumeric field; 2 positions*). Key in the division code. This is the first level of the organizational hierarchy. See the DVSN for valid division codes.

14 **Budget Org (***optional, alphanumeric field; 5 positions*). Key in the budget organization code. This is the second level of the organizational hierarchy.

15 **Budget Sub Org (***optional, alphanumeric field; 2 positions*). Key in the budget suborganization. This is a lower level of the organizational hierarchy and is used to record agency-specific elements.

16 **Cost Org (***optional, alphanumeric field; 5 positions*). Key in the cost organization. This is the second level or the organizational hierarchy. Cost organizations are those organizations with no budgets defined in FFIS and for which the system collects costs.

17 **Cost Sub Org** (*optional, alphanumeric field; 2 positions*). Key in the cost suborganization. This is a lower level of the cost organization and is used to record agency-specific elements.

18 **Program** (*optional, alphanumeric field; 9 positions*). Key in the program code. This is the functional breakdown of an agency's activities. This is a activity with no defined begin and/or end date. See the PGMT for valid program codes.

19 **Job (***optional, alphanumeric field; 8 positions*). Key in the job code. This is a project with a begin and end date.

20 **Rptg** (*optional, alphanumeric field; 2 positions*). Key in the reporting code. This is used to record agency-specific elements. See the RPTG for valid reporting codes.

21 **Sub BOC (***optional, alphanumeric field; 4 positions*). Key in the sub budget object code. This field is used to record agency-specific elements.

22 **Sub Rev Srce (***optional, alphanumeric field; 2 positions*). Key in the sub revenue source code. This field is used to record agency-specific elements.

23 **Closed BFYs (***optional, numeric field; 2 positions*). Key in the closed beginning budget fiscal year in the first 2 positions. This field is used by M-year accounting distributions (accounts which have expired but still have valid prior year funds). See the FSYR for valid closed budget fiscal years.

24 **Closed Fund (***optional, alphanumeric field; max. of 3 positions*). Key in the closed fund code. This field is used by M-year accounting distributions (accounts which have expired but still have valid prior year funds). See the FUND for valid closed fund codes.

After keying in the data, press [Enter]. All records (lines) that are error-free or tagged with warning messages are added; records that contain either overrideable or fatal errors are not added. The message *All Lines Added* is displayed at the bottom of the screen to indicate that all or some records have been added; if any records contain errors, error messages are also displayed. For more information about error messages and correcting errors, see **Part 2, System Edits**.

- To add another record, repeat the above process.

Performing Other Actions. For instructions on displaying, changing, and deleting a record, or performing any other action, see **Part 2, Using Tables**.

Automatic Document Numbering Table (ADNT)

The ADNT is used to automatically generate document numbers.

To access the ADNT, at the FFS screen, key in ***N*** at the Action field and ***ADNT*** at the TableID field, then press [Enter]. The ADNT screen (**Figure 8:6**) is displayed with an ***S*** in the Action field.

Instructions for adding are discussed below.

Note: If you are not authorized to perform a specific processing action (adding, changing, or deleting a record) in this table, contact your Functional Administrator responsible for Table Maintenance.

Adding A Record. At the ADNT screen, complete the fields as follows:

[1] **Action** *(required, alpha field; 1 position)*. Key in ***A***.

[2] **TableID** (*no-entry*). Displays ***ADNT***.

[3] **UserID** (*no-entry*). Displays the user ID.

[4] **Tran Code** 🔑 *(required, numeric field; 2 positions).* Key in transaction code.

[5] **Subm Dvsn** *(required, alpha field; 2 positions).* Key in the submitting division.

[6] **Document Number Prefix** 🔑 *(required, alphanumeric field; max. of 10 positions).* Key in the document number prefix.

[7] **Last Document Number Used** *(no-entry).* Displays the last document number used.

[8] **Date Last Num Used** *(no-entry).* Displays the last date the number was used.

[9] **Time Last Num Used** *(no-entry).* Displays the last time the number was used.

[10] **Log Flag** *(optional, alphanumeric field; 1 position).* Key in ***Y*** for *yes* or ***N*** for *no* to turn on/off the log indicator.

After keying in the data, press [Enter]. All records (lines) that are error-free or tagged with warning messages are added; records that contain either overrideable or fatal errors are not added. The message *All Lines Added* is displayed at the bottom of the screen to indicate that all or some records have been added; if any records contain errors, error messages are also displayed. For more information about error messages and correcting errors, see **Part 2, System Edits**.

- To add another record, repeat the above process.

Performing Other Actions. For instructions on displaying, changing, and deleting a record, or performing any other action, see **Part 2, Using Tables**.

```
ACTION: S [1]   TABLEID: ADNT [2]   USERID: NFxx [3]
AUTOMATIC DOCUMENT NUMBERING TABLE
KEY IS TRAN CODE, SEC1 CODE, DOCUMENT NUMBER PREFIX..
                    DOCUMENT       LAST
   TRAN   SUBM      NUMBER      DOCUMENT      DATE LAST   TIME LAST    LOG
   CODE   DVSN      PREFIX    NUMBER USED     NUM USED     NUM USED    FLAG
   ----   ----    ---------- ------------    ---------    --------    -------
01 [4]    [5]        [6]         [7]            [8]          [9]       [10]
02-
03-
04-
05-
06-
07-
08-
09-
10-
11-
12-
13-
```

Figure 8:6. Automatic Document Numbering Table (ADNT)

Agency Reference Table (AGCY)

The AGCY is used to:

- Define codes for the agencies represented in the system.
- Maintain a mailing address for each defined agency.

To access the AGCY, at the FFS screen, key in ***N*** at the Action field and ***AGCY*** at the TableID field, then press [Enter]. The AGCY screen (**Figure 8:7**) is displayed with an ***S*** in the Action field.

Instructions for adding are discussed below.

Note: If you are not authorized to perform a specific processing action (adding, changing, or deleting a record) in this table, contact your Functional Administrator responsible for Table Maintenance.

Adding A Record. At the AGCY screen, complete the fields as follows:

[1] **Action** *(required, alpha field; 1 position)*. Key in ***A***.

[2] **TableID** (*no-entry*). Displays ***AGCY***.

[3] **UserID** (*no-entry*). Displays the user ID.

[4] **Agency** 🔑 *(required, alphanumeric field; 4 positions)*. Key in a unique code to identify each agency.

[5] **Agency Name** *(optional, alphanumeric field; max. of 25 positions)*. Key in the name of the agency.

[6] **Agency Address Line 1** *(optional, alphanumeric field; max. of 25 positions)*. Key in the first line of the agency's address.

[7] **Agency Address Line 2** *(optional, alphanumeric field; max. of 25 positions)*. Key in the second line of the agency's address.

[8] **Agency Address Line 3** *(optional, alphanumeric field; max. of 25 positions)*. Key in the city, state, and ZIP-code of the agency's address.

[9] **Agency Telephone Number** *(optional, numeric field; 10 positions)*. Key in the agency's telephone number.

[10] **Agency Short Name** *(optional, alphanumeric field; max. of 10 positions)*. Key in the name to appear on reports when there is not enough room for the full name.

```
ACTION: S  [1] TABLEID: AGCY [2]  USERID: NFxx [3]
AGENCY REFERENCE TABLE
KEY IS AGENCY
01-
    AGENCY: [4]   AGENCY NAME:  [5]
    AGENCY ADDRESS LINE 1: [6]
    AGENCY ADDRESS LINE 2: [8]  [7]
    AGENCY ADDRESS LINE 3:
    AGENCY TELEPHONE NUMBER: ( [9]  )     -
    AGENCY SHORT NAME:      [10]
02-
    AGENCY:       AGENCY NAME:
    AGENCY ADDRESS LINE 1:
    AGENCY ADDRESS LINE 2:
    AGENCY ADDRESS LINE 3:
    AGENCY TELEPHONE NUMBER: (     )     -
    AGENCY SHORT NAME:
```

Figure 8:7. Agency Reference Table (AGCY)

After keying in the data, press [Enter]. All records (lines) that are error-free or tagged with warning messages are added; records that contain either overrideable or fatal errors are not added. The message *All Lines Added* is displayed at the bottom of the screen to indicate that all or some records have been added; if any records contain errors, error messages are also displayed. For more information about error messages and correcting errors, see **Part 2, System Edits**.

- To add another record, repeat the above process.

Performing Other Actions. For instructions on displaying, changing, and deleting a record, or performing any other action, see **Part 2, Using Tables**.

Accounting Period Cutoff Reference Table (APCT)

The APCT is used to obtain an accounting period that is unique for each feeder interface process.

To access the APCT, at the FFS screen, key in ***N*** at the Action field and ***APCT*** at the TableID field, then press [Enter]. The APCT screen (**Figure 8:8**) is displayed with ***S*** in the Action field.

Instructions for adding are discussed below.

Note: If you are not authorized to perform a specific processing action (adding, changing, or deleting a record) in this table, contact your Functional Administrator responsible for Table Maintenance.

Adding A Record. At the APCT screen, complete the fields as follows:

1 **Action** *(required, alpha field; 1 position)*. Key in ***A***.

2 **TableID** (*no-entry*). Displays ***APCT***.

3 **UserID** (*no-entry*). Displays the user ID.

4 **Feeder System ID** 🔑 *(required, alpha field; 4 positions)*. Key in the identifying code of the feeder system for which the table entry has been made.

5 **End Of Month** 🔑 *(required, numeric field; 6 positions)*. Key in the last accepted date of the associated accounting period (end of month) using the *yymmdd* format. See the CLDT for valid end of month dates.

6 **Accounting Period** *(optional, numeric field; 4 positions)*. Key in the accounting period associated with the end of month date entered using the *yymm* format. See the APRD for valid accounting periods.

After keying in the data, press [Enter]. All records (lines) that are error-free or tagged with warning messages are added; records that contain either overrideable or fatal errors are not added. The message *All Lines Added* is displayed at the bottom of the screen to indicate that all or some records have been added; if any records contain errors, error messages are also displayed. For more information about error messages and correcting errors, see **Part 2, System Edits**.

- To add another record, repeat the above process.

Performing Other Actions. For instructions on displaying, changing, and deleting a record, or performing any other action, see **Part 2, Using Tables**.

```
ACTION: S  [1] TABLEID: APCT  [2] USERID: NFxx     [3]
ACCOUNTING PERIOD CUTOFF REFERENCE TABLE
KEY IS FEEDER SYSTEM ID, END OF MONTH
FEEDER SYSTEM ID: [4]
         END OF MONTH              ACCOUNTING PERIOD
         ------------              -----------------
01-           [5]                        [6]
02-
03-
04-
05-
06-
07-
08-
09-
10-
11-
12-
13-
14-
15-
```

Figure 8:8. Accounting Period Cutoff Reference Table (APCT)

Debt Appeal Reference Table (APPL)

The APPL is used to define data related to appeals for waivers of debt payment.

To access the APPL, at the FFS screen, key in ***N*** at the Action field and ***APPL*** at the TableID field, then press [Enter]. The APPL screen (**Figure 8:9**) is displayed with an ***S*** in the Action field.

Instructions for adding are discussed below.

Note: If you are not authorized to perform a specific processing action (adding, changing, or deleting a record) in this table, contact your Functional Administrator responsible for Table Maintenance.

Adding A Record. At the APPL screen, complete the fields as follows:

[1] **Action** *(required, alpha field; 1 position)*. Key in ***A***.

[2] **TableID** *(no-entry)*. Displays ***APPL***.

[3] **UserID** *(no-entry)*. Displays the user ID.

[4] **Billing Doc ID** 🔑 *(required, alphanumeric field; 13 positions)*. Key in the billing document ID related to the appeal date.

[5] **Payer Code** *(no-entry)*. Displays the payer code related to the appeal data.

[6] **Appeal Expiration** *(conditional, numeric field; 6 positions)*. If Appeal Request is ***Y***, key in the expiration date of the appeal for this receivable. This date must be later than the bill date in the ARHT.

[7] **Appeal Request** *(optional, alpha field; 1 position)*. Key in one of the following to indicate if an appeal has been requested:

- ***L*** = Appeal is late
- ***N*** = Appeal has not been requested.
- ***Y*** = Appeal has been requested

Note: The same processing is performed for ***L*** as for ***Y***.

[8] **Appeal Denial Notice** *(optional, numeric field; 6 positions)*. Key in the date the payer for this receivable was notified of the appeal denial.

[9] **Stat** *(optional, alphanumeric field; 1 position)*. Key in the status within the appeal process for this receivable. These values are defined by the user and are not edited by the system.

[10] **Change Date** *(optional, numeric field; 6 positions)*. Key in the last date the status was changed.

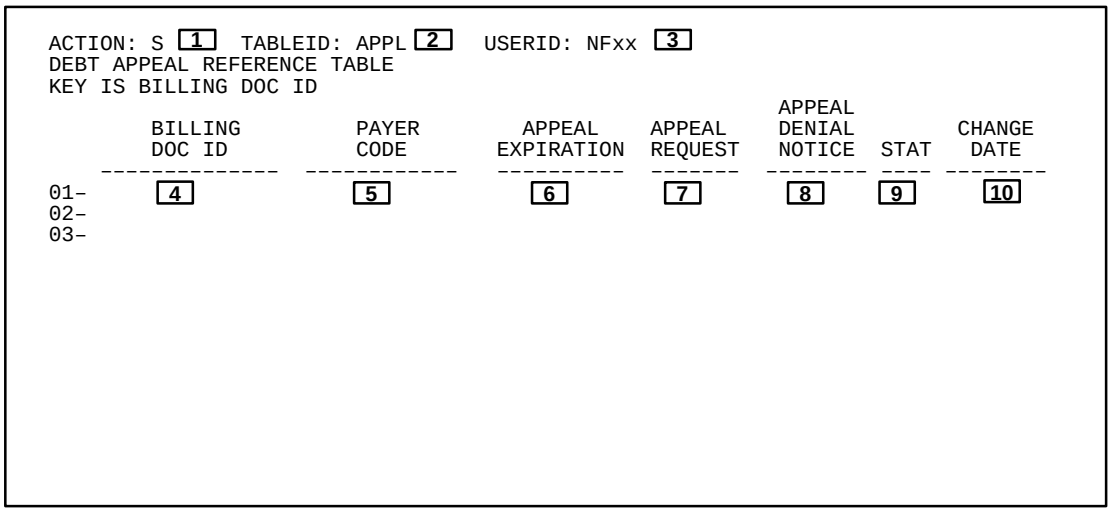

Figure 8:9. Debt Appeal Reference Table (APPL)

After keying in the data, press [Enter]. All records (lines) that are error-free or tagged with warning messages are added; records that contain either overrideable or fatal errors are not added. The message *All Lines Added* is displayed at the bottom of the screen to indicate that all or some records have been added; if any records contain errors, error messages are also displayed. For more information about error messages and correcting errors, see **Part 2, System Edits**.

- To add another record, repeat the above process.

Performing Other Actions. For instructions on displaying, changing, and deleting a record, or performing any other action, see **Part 2, Using Tables**.

Accounting Period Reference Table (APRD)

The APRD is used to:

- Define accounting periods used in the system.
- Determine if an accounting period is open or closed.
- Identify which accounting period (if any) is the year-end adjustment period.

To access the APRD, at the FFS screen, key in ***N*** at the Action field and ***APRD*** at the TableID field, then press [Enter]. The APRD screen (**Figure 8:10**) is displayed with an ***S*** in the Action field.

Instructions for adding are discussed below.

Note: If you are not authorized to perform a specific processing action (adding, changing, or deleting a record) in this table, contact your Functional Administrator responsible for Table Maintenance.

Adding A Record. At the APRD screen, complete the fields as follows:

[1] **Action** *(required, alpha field; 1 position)*. Key in ***A***.

[2] **TableID** (*no-entry*). Displays ***APRD***.

[3] **UserID** (*no-entry*). Displays the user ID.

[4] **Yr** 🔑 *(required, numeric field; 2 positions)*. Key in the last 2 digits of the fiscal year.

[5] **Mo** 🔑 *(required, numeric field; 2 positions)*. Key in the accounting period month being defined in this line. See the FSYR for how many accounting periods are defined in a particular fiscal year.

[6] **Qtr** *(required, numeric field; 1 position)*. Key in the fiscal quarter (***1***, ***2***, ***3***, or ***4***) in which the period falls. The year-end adjustment period is usually associated with quarter 4.

[7] **Month Name** *(optional, alphanumeric field; max. of 12 positions)*. Key in the name of the accounting period exactly as it is to appear on reports.

[8] **Month End** *(required, numeric field; 6 positions)*. Key in the last calendar date of the accounting period. Use the *yymmdd* format.

[9] **Closed Prd Ind** *(optional default, alpha field; 1 position)*. Key in ***N***. The month end closing program changes this field to ***Y*** when the period is closed. No documents can be posted to a closed period. If needed, this indicator can be changed by the user to access previously closed accounting periods. If left blank, the system defaults to ***N***.

Note: If a user opens a previously closed accounting period, the user must manually close the accounting period. The system will not automatically close the accounting period.

[10] **Y/E Adj Prd Ind** *(optional default, alphanumeric field; 1 position)*. Key in ***Y*** if the accounting period defined on this line is a year-end adjustment period. If left blank, the system defaults to ***N***.

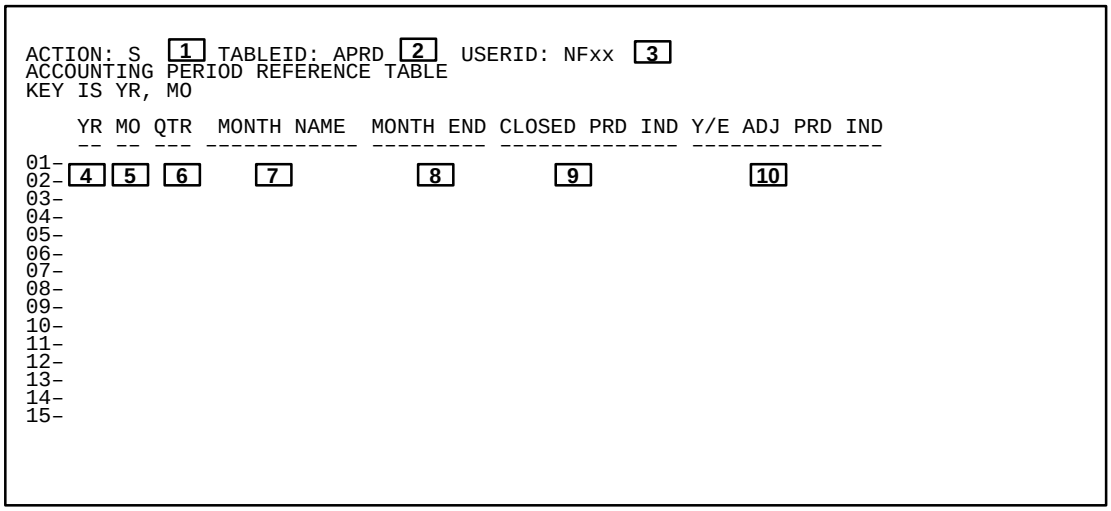

Figure 8:10. Accounting Period Reference Table (APRD)

After keying in the data, press [Enter]. All records (lines) that are error-free or tagged with warning messages are added; records that contain either overrideable or fatal errors are not added. The message *All Lines Added* is displayed at the bottom of the screen to indicate that all or some records have been added; if any records contain errors, error messages are also displayed. For more information about error messages and correcting errors, see **Part 2, System Edits**.

- To add another record, repeat the above process.

Performing Other Actions. For instructions on displaying, changing, and deleting a record, or performing any other action, see **Part 2, Using Tables**.

Account Referral Destination Reference Table (ARDT)

The ARDT is used to:

- Identify the destinations available for referral.
- Indicate if interest and penalty charges should continue to accrue for accounts referred to each location.

To access the ARDT, at the FFS screen, key in ***N*** at the Action field and ***ARDT*** at the TableID field, then press [Enter]. The ARDT screen (**Figure 8:11**) is displayed with an ***S*** in the Action field.

Instructions for adding are discussed below.

Note: If you are not authorized to perform a specific processing action (adding, changing, or deleting a record) in this table, contact your Functional Administrator responsible for Table Maintenance.

Adding A Record. At the ARDT screen, complete the fields as follows:

[1] **Action** *(required, alpha field; 1 position)*. Key in ***A***.

[2] **TableID** *(no-entry)*. Displays ***ARDT***.

[3] **UserID** *(no-entry)*. Displays the user ID.

[4] **Destination Code** *(required, alphanumeric field; 4 positions)*. Key in the value to specify where an account is being referred.

[5] **Destination Name** *(required, alpha field; max. of 30 positions)*. Key in the name associated with the destination code.

[6] **Referral Administrative Cost** *(optional, numeric field; max. of 19 positions)*. Key in the one-time administrative cost that is assessed to a receivable if it is referred to this destination code.

[7] **Int Flag** *(optional default, alpha field; 1 position)*. Key in ***Y*** if interest should be charged to the receivable while it is referred to this destination code. If left blank, the system defaults to ***N***.

[8] **Pen Flag** *(optional default, alpha field; 1 position)*. Key in ***Y*** if penalties should be charged to the receivable while it is referred to this destination code. If left blank, the system defaults to ***N***.

After keying in the data, press [Enter]. All records (lines) that are error-free or tagged with warning messages are added; records that contain either overrideable or fatal errors are not added. The message *All Lines Added* is displayed at the bottom of the screen to indicate that all or some records have been added; if any records contain errors, error messages are also displayed. For more information about error messages and correcting errors, see **Part 2, System Edits**.

- To add another record, repeat the above process.

Performing Other Actions. For instructions on displaying, changing, and deleting a record, or performing any other action, see **Part 2, Using Tables**.

```
ACTION: S [1]  TABLEID: ARDT [2]  USERID: NFxx [3]
ACCOUNT REFERRAL DESTINATION REFERENCE TABLE
KEY IS DESTINATION CODE
                                                    REFERRAL
    DESTINATION                                  ADMINISTRATIVE     INT  PEN
       CODE              DESTINATION NAME             COST          FLAG FLAG
    -----------  ------------------------------ ------------------  ---- ----
01-     [4]                    [5]                      [6]          [7]  [8]
02-
03-
04-
05-
06-
07-
08-
09-
10-
11-
12-
13-
14-
```

Figure 8:11. Account Referral Destination Reference Table (ARDT)

Accounts Receivable Referral Parameter Table (AREP)

The AREP is used to define parameters relating to referring accounts for collection to outside agencies.

To access the AREP, at the FFS screen, key in ***N*** at the Action field and ***AREP*** at the TableID field, then press [Enter]. The AREP screen (**Figure 8:12**) is displayed with an ***S*** in the Action field.

Instructions for adding are discussed below.

Note: If you are not authorized to perform a specific processing action (adding, changing, or deleting a record) in this table, contact your Functional Administrator responsible for Table Maintenance.

Adding A Record. At the AREP screen, complete the fields as follows:

1 **Action** *(required, alpha field; 1 position)*. Key in ***A***.

2 **TableID** *(no-entry)*. Displays ***AREP***.

3 **UserID** *(no-entry)*. Displays the user ID.

4 **Fiscal Year** *(required, numeric field; 2 positions)*. Key in the fiscal year to which the parameter values apply.

5 **Division** *(optional default, alphanumeric field; 2 positions)*. Key in the division to which the parameter values apply. If left blank, the system defaults to parameter values that applies to all divisions for that fiscal year which do not have a specific AREP entry.

6 **Referral Lag Days** *(required, numeric field; 3 positions)*. Key in the minimum number of days after the collection due date when the account can be referred. Use all 3 positions (i.e., 5 is keyed in as ***005***).

7 **Minimum Referral Amount** *(required, numeric field; max. of 19 positions)*. Key in the minimum dollar amount that is referred to an outside agency.

8 **Minimum Dunning Count** *(required, numeric field; 2 positions)*. Key in the minimum number of dunning notices that must be sent before the account is referred.

9 **Dunning Lag Days** *(required, numeric field; 3 positions)*. Key in the minimum number of days after the last dunning notice was sent when the account is referred. Use all 3 positions (i.e., 3 is keyed in as ***003***).

After keying in the data, press [Enter]. All records (lines) that are error-free or tagged with warning messages are added; records that contain either overrideable or fatal errors are not added. The message *All Lines Added* is displayed at the bottom of the screen to indicate that all or some records have been added; if any records contain errors, error messages are also displayed. For more information about error messages and correcting errors, see **Part 2, System Edits**.

- To add another record, repeat the above process.

Performing Other Actions. For instructions on displaying, changing, and deleting a record, or performing any other action, see **Part 2, Using Tables**.

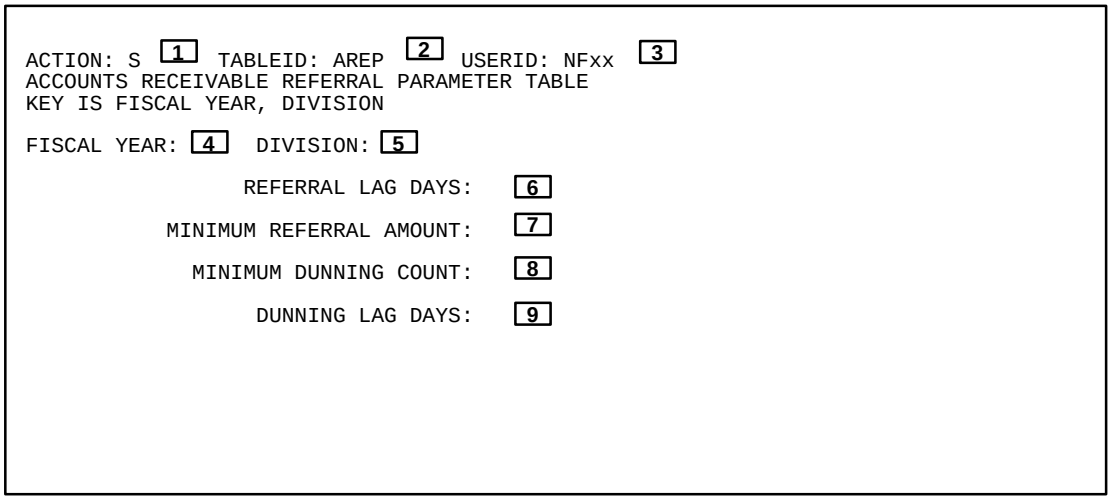

Figure 8:12. Accounts Receivable Referral Parameter Table (AREP)

Accounts Receivable Control Options Reference Table (AROP)

The AROP is used to define the controls and options for accounts receivable processing.

To access the AROP, at the FFS screen, key in ***N*** at the Action field and ***AROP*** at the TableID field, then press [Enter]. The AROP screen (**Figure 8:13**) is displayed with an ***S*** in the Action field.

Instructions for adding are discussed below.

Note: If you are not authorized to perform a specific processing action (adding, changing, or deleting a record) in this table, contact your Functional Administrator responsible for Table Maintenance.

Adding A Record. At the AROP screen, complete the fields as follows:

[1] **Action** *(required, alpha field; 1 position)*. Key in ***A***.

[2] **TableID** *(no-entry)*. Displays ***AROP***.

[3] **UserID** *(no-entry)*. Displays the user ID.

[4] **Fiscal Year** 🔑 *(required, numeric field; 2 positions)*. Key in the fiscal year to which the control options apply.

[5] **BFYs (Interest)** *(required, numeric field; 2 positions)*. Key in the accounting distribution used when posting interest on an overdue receivable.

[6] **BFYs (Admin Charges)** *(required, numeric field; 2 positions)*. Key in the accounting distribution used when posting administrative charges on an overdue receivable.

[7] **BFYs (Penalty)** *(required, numeric field; 2 positions)*. Key in the accounting distribution used when posting penalties on an overdue receivable.

[8] **Fund (Interest)** *(required, numeric field; max. of 3 positions)*. Key in the accounting distribution used when posting interest on an overdue receivable.

[9] **Fund (Admin Charges)** *(required, numeric field; max. of 3 positions)*. Key in the accounting distribution used when posting administrative charges on an overdue receivable.

[10] **Fund (Penalty)** *(required, numeric field; max. of 3 positions)*. Key in the accounting distribution used when posting penalties on an overdue receivable.

[11] **Organization (Interest)** *(required, numeric field; 5 positions)*. Key in the accounting distribution used when posting interest on an overdue receivable.

[12] **Organization (Admin Charges)** *(required, numeric field; 5 positions)*. Key in the accounting distribution used when posting administrative charges on an overdue receivable.

[13] **Organization (Penalty)** *(required, numeric field; 5 positions)*. Key in the accounting distribution used when posting penalties on an overdue receivable.

[14] **Program (Interest)** *(required, numeric field; 9 positions)*. Key in the accounting distribution used when posting interest on an overdue receivable.

[15] **Program (Admin Charges)** *(required, numeric field; 9 positions)*. Key in the accounting distribution used when posting administrative charges on an overdue receivable.

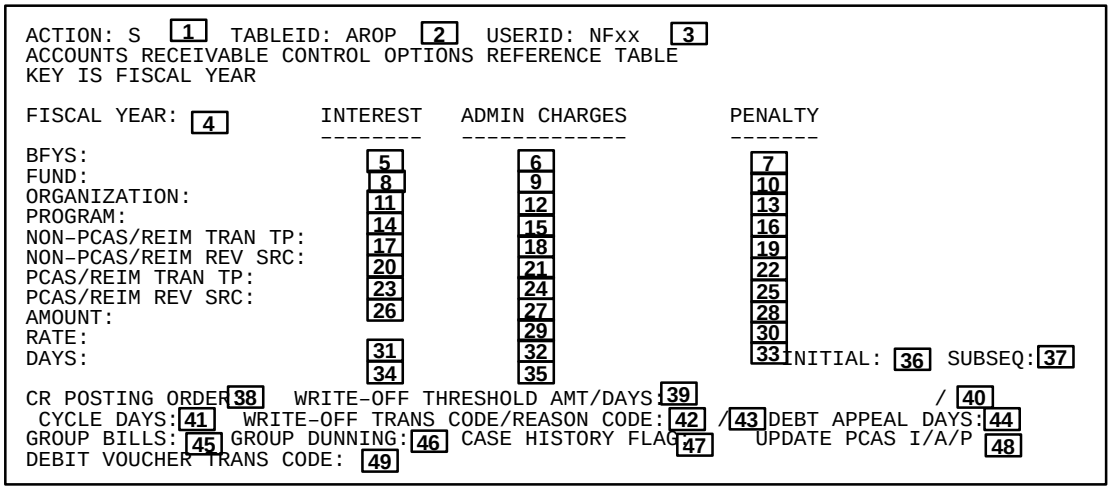

Figure 8:13. Accounts Receivable Control Options Reference Table (AROP)

16 Program (Penalty) *(required, numeric field; 9 positions)*. Key in the accounting distribution used when posting penalties on an overdue receivable.

17 Non-PCAS/Reim Tran Tp (Interest) *(conditional, alphanumeric field; 2 positions)*. If one of the following apply, key in the transaction type for posting interest on overdue receivables:

- The bill does not include a customer agreement number
- The bill contains a customer agreement with a non-reimbursable customer type (per the CAHT)
- The Update PCAS I/A/P flag is set to ***N***

18 Non-PCAS/Reim Tran Tp (Admin Charges) *(conditional, alphanumeric field; 2 positions)*. If one of the following apply, key in the transaction type for posting administrative charges on overdue receivables if:

- The bill does not include a customer agreement number
- The bill contains a customer agreement with a non-reimbursable customer type (per the CAHT)
- The Update PCAS I/A/P flag is set to ***N***

19 Non-PCAS/Reim Tran Tp (Penalty) *(conditional, alphanumeric field; 2 positions)*. If one of the following apply, key in the transaction type for posting penalties on overdue receivables:

- The bill does not include a customer agreement number
- The bill contains a customer agreement with a non-reimbursable customer type (per the CAHT)
- The Update PCAS I/A/P flag is set to ***N***

20 Non-PCAS/Reim Rev Src (Interest) *(conditional, alphanumeric field; 4 positions)*. If one of the following apply, key in the revenue source for posting interest on overdue receivables:

- The bill does not include a customer agreement number
- The bill contains a customer agreement with a non-reimbursable customer type (per the CAHT)
- The Update PCAS I/A/P flag is set to ***N***

21 Non-PCAS/Reim Rev Src (Admin Charges) *(required, alphanumeric field; 4 positions)*. If one of the following apply, key in the revenue source for posting administrative charges on overdue receivables:

- The bill does not include a customer agreement number
- The bill contains a customer agreement with a non-reimbursable customer type (per the CAHT)
- The Update PCAS I/A/P flag is set to ***N***

22 Non-PCAS/Reim Rev Src (Penalty) *(conditional, alphanumeric field; 4 positions)*. If one of the following apply, key in the revenue source for posting penalties on overdue receivables:

- The bill does not include a customer agreement number
- The bill contains a customer agreement with a non-reimbursable customer type (per the CAHT)
- The Update PCAS I/A/P flag is set to ***N***

23 PCAS/Reim Tran Tp (Interest) *(conditional, alphanumeric field; 2 positions)*. If the Project Cost Subsystem Installed Option in the SOPT is **Y**, key in the transaction type for posting interest on overdue receivables if:

- The bill includes a customer agreement number with a reimbursable customer type (per the CAHT) and
- The Update PCAS I/A/P flag is set to ***Y***

24 PCAS/Reim Tran Tp (Admin Charges) *(conditional, alphanumeric field; 2 positions)*. If the Project Cost Subsystem Installed Option in the SOPT is ***Y***, key in the transaction type for posting administrative charges on overdue receivables if:

- The bill includes a customer agreement number with a reimbursable customer type (per the CAHT) and
- The Update PCAS I/A/P flag is set to ***Y***

25 PCAS/Reim Tran Tp (Penalty) *(conditional, alphanumeric field; 2 positions)*. If the Project Cost Subsystem Installed Option in the SOPT is ***Y***, key in the transaction type for posting penalties on overdue receivables if:

- The bill includes a customer agreement number with a reimbursable customer type (per the CAHT) and
- The Update PCAS I/A/P flag is set to ***Y***.

26 PCAS/Reim Rev Src (Interest) *(conditional, alphanumeric field; 4 positions)*. If the Project Cost Subsystem Installed Option in the SOPT is ***Y***, key in the revenue source for posting interest on overdue receivables if:

- The bill includes a customer agreement with a reimbursable customer type (per the CAHT) and
- The Update PCAS I/A/P flag is set to ***Y***.

27 PCAS/Reim Rev Src (Admin Charges) *(conditional, alphanumeric field; 4 positions)*. If the Project Cost Subsystem Installed Option in the SOPT is ***Y***, key in the revenue source for posting administrative charges on overdue receivables if:

- The bill includes a customer agreement with a reimbursable customer type (per the CAHT) and

- The Update PCAS I/A/P flag is set to ***Y***.

28 **PCAS/Reim Rev Src (Penalty)** *(conditional, alphanumeric field; 4 positions)*. If the Project Cost Subsystem Installed Option in the SOPT is **Y**, key in the revenue source for posting penalties on overdue receivables if:

- The bill includes a customer agreement with a reimbursable customer type (per the CAHT) and
- The Update PCAS I/A/P flag is set to ***Y***.

29 **Amount (Admin Charges)** *(conditional, numeric field; max. of 19 positions)*. If an administrative charges rate is entered (**Field 32**), leave this field blank. Otherwise, key in the administrative charges amount to be applied against an overdue receivable.

30 **Amount (Penalty)** *(conditional, numeric field; max. of 19 positions)*. If the penalty rate is entered (**Field 33**), leave this field blank. Otherwise, key in the penalty amount applied against an overdue receivable.

31 **Rate (Interest)** *(required, numeric field; max. of 7 positions)*. Key in the interest rate to apply against overdue receivables (format ***999.999***).

32 **Rate (Admin Charges)** *(optional, numeric field; max. of 7 positions)*. Key in the administrative charges rate charged on an overdue receivable for administrative charges (format ***999.999***).

33 **Rate (Penalty)** *(optional, numeric field; max. of 7 positions)*. Key in the penalty rate charged on an overdue receivable for late payment (format ***999.999***).

34 **Days (Interest)** *(required, numeric field; 3 positions)*. Key in the number of days from the billing date or from the last interest apply date to determine if interest should be applied to the receivable.

35 **Days (Admin Charges)** *(required, numeric field; 3 positions)*. Key in the number of days from the collection due date or from the last administrative charges apply date to determine if administrative charges should be applied to the receivable.

36 **Initial Days (Penalty)** *(required, numeric field; 3 positions)*. Key in the number of days from the collection due date to determine when penalties should be applied to the receivable for the first time.

37 **Subseq Days (Penalty)** *(required, numeric field; 3 positions)*. Key in the number of days from the penalty apply date to determine if penalties should be applied to the receivable after initial penalties have already been charged.

Note: Fields **38** through **48** establish options and default values for all accounts receivable.

38 **CR Posting Order** *(required, alpha field; 1 position)*. Key in the one of the following posting orders used to clear a receivable when the CR is entered:

- ***A*** = Administrative charges are cleared first, followed by interest charges, followed by penalty charges, followed by the outstanding principal.
- ***D*** = Administrative charges are cleared first, followed by penalty charges, followed by interest charges, followed by the outstanding principal.
- ***I*** = Interest charges are cleared first, followed by administrative charges, followed by penalty charges, followed by the outstanding principal.
- ***O*** = Outstanding principal are cleared first, followed by interest charges, followed by administrative charges, followed by penalty charges.
- ***P*** = Penalty charges are cleared first followed by administrative charges, followed by interest charges, followed by the outstanding principal.

39 **Write-Off Threshold Amount** *(required, numeric field; max. of 19 positions)*. Key in the maximum amount a receivable should be to determine if it should be selected for write-off.

40 **Write-Off Threshold Days** *(required, numeric field; max. of 5 positions)*. Key in the number of days a receivable should be overdue to determine if it should be selected for write-off.

41 **Cycle Days** *(required, numeric field; max. of 3 positions)*. Key in the cycle days which are used to determine the collection due date and to determine the frequency for generating dunning notices.

42 **Write-Off Trans Code** *(required, alphanumeric field; 2 positions)*. Key in the transaction code used on the cash receipts generated for posting the write-off. The write-off transaction code must also be entered in the TCAT with a transaction category of **CR**. Entries must also be made in the ACED and ACEN and the GLTT for the write-off postings.

43 **Write-Off Reason Code** *(required, alphanumeric field; 1 position)*. Key in the write-off reason code that is used as the default when a receivable is written off.

44 **Debt Appeal Days** *(optional default, numeric field; 3 positions)*. Key in the number of days that the bill print program should use to calculate the default debt appeal expiration date in the APPL when a bill is initially printed or suppressed. The user can manually change the calculated default date in APPL. If left blank, the system defaults to ***60***.

45 **Group Bills** *(conditional, alpha field; 1 position)*. If bills are grouped by debtor, key in ***Y***. If bills are not grouped by debtor, key in ***N*** .

46 **Group Dunning** *(conditional, alpha field; 1 position)*. If dunning notices are grouped by debtor, key in ***Y***. If dunning notices are not grouped by debtor, key in ***N***.

47 **Case History Flag** *(conditional, alpha field; 1 position)*. If all entries are to generate to the ARCL, key in ***Y***. If this default option is not desired, key in ***N***. This default option can be overridden on a specific Billing document.

48 **Update PCAS I/A/P** *(conditional, alpha field; 1 position)*. If the Project Cost (Installed Option) in the SOPT is **Y**, and if the project tables and journals should be updated for interest, administrative charges, and penalties in PCAS Reimbursable Customer Agreements (i.e., customer agreement is entered and the associated customer type per the CAHT is reimbursable), key in ***Y***. If the project tables and journals should not be updated for interest, administrative charges, and penalties in PCAS Reimbursable Customer Agreements, key in ***N***. If this field is set to ***N***, the non-PCA, non-reimbursable transaction types and revenue sources are automatically used for interest, administrative charges, and penalties.

49 **Debit Voucher Trans:DR** (*optional, alpha field; 2 positions*). Key in the transaction code used to invoke customized debit voucher processing.

After keying in the data, press [Enter]. All records (lines) that are error-free or tagged with warning messages are added; records that contain either overrideable or fatal errors are not added. The message *All Lines Added* is displayed at the bottom of the screen to indicate that all or some records have been added; if any records contain errors, error messages are also displayed. For more information about error messages and correcting errors, see **Part 2, System Edits**.

- To add another record, repeat the above process.

Performing Other Actions. For instructions on displaying, changing, and deleting a record, or performing any other action, see **Part 2, Using Tables**.

Accounting Structure Code Reverse Cross-Reference Table (ARXT)

The ARXT is used to process FFIS data (i.e., data specified on an FFIS document or journal record) to existing feeder systems by cross-walking the FFIS Accounting Classification Code Structure to a formatted accounting structure, which is recognized by existing feeder systems, such as PROP or CADI.

To access the ARXT, at the FFS screen, key in ***N*** at the Action field and ***ARXT*** at the TableID field, then press [Enter]. The ARXT screen (**Figure 8:14**) is displayed with an ***S*** in the Action field.

Instructions for adding are discussed below.

Note: If you are not authorized to perform a specific processing action (adding, changing, or deleting a record) in this table, contact your Functional Administrator responsible for Table Maintenance.

Adding A Record. At the ARXT screen, complete the fields as follows:

[1] **Action** *(required, alpha field; 1 position)*. Key in ***A***.

[2] **TableID** (*no-entry*). Displays ***ARXT***.

[3] **UserID** (*no-entry*). Displays the user ID.

[4] **Agency** (*required, numeric field; max. of 4 positions*). Key in the identifying code of the agency for which the record is associated. See the AGCY for a valid agency code.

[5] **BFYs** *(required, numeric field; 2 positions)*. Key in the last 2 digits of the beginning fiscal year for which money is available for a given appropriation. See the FSYR for a valid fiscal year.

[6] **Fund** **(***required, alphanumeric field; max. of 3 positions*). Key in the fund associated with and related to the Treasury symbol. See the FUND for valid fund codes.

[7] **Division** **(***required, alphanumeric field; 2 positions*). Key in the division code. This is the first level of the organizational hierarchy. See the DVSN for valid division codes.

[8] **Budget Org** **(***required, alphanumeric field; 5 positions*). Key in the budget organization code. This is the second level of the organizational hierarchy. See the ORGN for valid budget organization codes.

[9] **Budget Sub** **(***required, alphanumeric field; 2 positions*). Key in the budget suborganization. This is a lower level of the organizational hierarchy and is used to record agency-specific elements. See the SORG for valid suborganization codes.

[10] **Cost Org** **(***required, alphanumeric field; 5 positions*). Key in the cost organization. This is the second level or the organizational hierarchy. See the ORGN for valid cost organization codes.

[11] **Cost Sub** **(***required, alphanumeric field; 2 positions*). Key in the cost suborganization. This is a lower level of the cost organization and is used to record agency-specific elements. See the SORG for valid cost suborganization codes.

```
ACTION: S [1] TABLEID: ARXT  [2] USERID: NFxx     [3]
ACCOUNTING STRUCTURE CODE REVERSE CROSS-REFERENCE TABLE
KEY IS AGENCY, BFYS, FUND, DIVISION, JOB, RPTG, PROGRAM,
BUDGET ORG/SUB, COST ORG/SUB, SUB BOC/SUB SRCE, CLOSED BFYS,
CLOSED FUND

01- AGENCY: [4]

    -------------------------FFIS ACCS--------------------------
    BFYS: [5]          FUND: [6]          DIVISION: [7]
    BUDGET ORG/SUB: [8][9]                COST ORG/SUB: [10][11]
    PROGRAM: [12]      JOB: [13]          RPTG: [14]
    SUB BOC/SUB SRCE: [15][16]
    CLOSED BFYS: [17]                     CLOSED FUND: [18]

    ------------------ACCOUNTING STRUCTURE CODE-----------------
    FY: [19]  ASC: [20]
    ACCOUNTING STATION: [21]
```

Figure 8:14. Accounting Structure Code Reverse Cross-Reference Table (ARXT)

12 **Program** **(***required, alphanumeric field; 9 positions*). Key in the program code. This is the functional breakdown of an agency's activities with no defined begin and/or end date. See PGMT for valid program codes.

13 **Job** **(***required, alphanumeric field; 8 positions*). Key in the job code. This is a project with a begin and end date.

14 **Rptg** **(***required, alphanumeric field; 2 positions*). Key in the reporting code. This is used to record agency-specific elements. See RPTG for valid reporting codes.

15 **Sub BOC** **(***required, alphanumeric field; 2 positions*). Key in the sub budget object code. This field is used to record agency-specific elements.

16 **Sub Srce** **(***required, alphanumeric field; 2 positions*). Key in the sub revenue source code. This field is used to record agency-specific elements.

17 **Closed BFYs** **(***required, alphanumeric field; 2 positions*). Key in the last 2 digits of the closed beginning budget fiscal year. This field is used by M-year accounting distributions (accounts which have expired but still have valid prior year funds). See the FSYR for valid closed budget fiscal years.

18 **Closed Fund** **(***required, alphanumeric field; max. of 3 positions*). Key in the closed fund code. This field is used by M-year accounting distributions (accounts which have expired but still have valid prior year funds). See the FUND for valid closed fund codes.

19 **FY** *(optional, numeric field; 2 positions)*. Key in the last 2 digits of the fiscal year for which the accounts and options are defined. See the FSYR for a valid fiscal year.

20 **ASC** *(optional, alphanumeric field; max. of 35 positions*). Key in the accounting structure code.

21 **Accounting Station** (*conditional, numeric field; 4 positions*). If the Use Accounting Station field on the AVOT is ***Y***, key in the accounting station associated with an accounting structure code. If the Use Accounting Station field on the AVOT is ***N***, leave blank.

After keying in the data, press [Enter]. All records (lines) that are error-free or tagged with warning messages are added; records that contain either overrideable or fatal errors are not added. The message *All Lines Added* is displayed at the bottom of the screen to indicate that all or some records have been added; if any records contain errors, error messages are also displayed. For more information about error messages and correcting errors, see **Part 2, System Edits**.

- To add another record, repeat the above process.

Performing Other Actions. For instructions on displaying, changing, and deleting a record, or performing any other action, see **Part 2, Using Tables**.

Accounting Structure Code Options Reference Table (AVOT)

The AVOT is used to permit the interfaces and MASC-VAL to determine if the accounting station is needed on the ACXT.

To access the AVOT, at the FFS screen, key in ***N*** at the Action field and ***AVOT*** at the TableID field, then press [Enter]. The AVOT screen (**Figure 8:15**) is displayed with an ***S*** in the Action field.

Instructions for adding are discussed below.

Note: If you are not authorized to perform a specific processing action (adding, changing, or deleting a record) in this table, contact your Functional Administrator responsible for Table Maintenance.

Adding A Record. At the AVOT screen, complete the fields as follows:

[1] **Action** *(required, alpha field; 1 position)*. Key in ***A***.

[2] **TableID** (*no-entry*). Displays ***AVOT***.

[3] **UserID** (*no-entry*). Displays the user ID.

[4] **FY** 🔑 *(required, numeric field; 2 positions)*. Key in the fiscal year. See the FSYR for valid fiscal years.

[5] **Agency** 🔑 (*required, numeric field; max. of 4 positions*). Key in the identifying code of the agency which the record is associated. See the AGCY for valid agency codes.

[6] **Use Accounting Station** (*required, alpha field; 1 position*). Key in ***Y*** if the accounting station is used as part of the key to ACXT. Key in ***N*** if the accounting station is not used as part of the key to ACXT.

After keying in the data, press [Enter]. All records (lines) that are error-free or tagged with warning messages are added; records that contain either overrideable or fatal errors are not added. The message *All Lines Added* is displayed at the bottom of the screen to indicate that all or some records have been added; if any records contain errors, error messages are also displayed. For more information about error messages and correcting errors, see **Part 2, System Edits**.

- To add another record, repeat the above process.

Performing Other Actions. For instructions on displaying, changing, and deleting a record, or performing any other action, see **Part 2, Using Tables**.

```
ACTION: S [1] TABLEID: AVOT[2]  USERID: NFxx     [3]
ACCOUNTING STRUCTURE CODE OPTIONS REFERENCE TABLE
KEY IS FY, AGENCY

     FY    AGENCY           USE ACCOUNTING STATION
    --    -------            ----------------------
01-  [4]     [5]                      [6]
02-
03-
04-
05-
06-
07-
08-
09-
10-
11-
12-
13-
14-
15-
```

Figure 8:15. Accounting Structure Code Options Reference Table (AVOT)

Budget Object Code Reference Table (BOCT)

The BOCT is used to:

- Define Budget Object Codes (BOCs) for specific items and services the government purchases and identify which codes stand for personnel-related or travel services.
- Define which BOCs are used in establishing the budget.
- Group similar BOCs into higher level classifications. BOCs can be grouped by class and category.
- Define whether or not the BOC should be used to determine the accounting entries for posting to the General Ledger.
- Determine if the BOC on a document may be different than the BOC on the referenced document.

To access the BOCT, at the FFS screen, key in ***N*** at the Action field and ***BOCT*** at the TableID field, then press [Enter]. The BOCT screen (**Figure 8:16**) is displayed with an ***S*** in the Action field.

Instructions for adding are discussed below.

Note: If you are not authorized to perform a specific processing action (adding, changing, or deleting a record) in this table, contact your Functional Administrator responsible for Table Maintenance.

Adding A Record. At the BOCT screen, complete the fields as follows:

[1] **Action** *(required, alpha field; 1 position)*. Key in ***A***.

[2] **TableID** (*no-entry*). Displays ***BOCT***.

[3] **UserID** (*no-entry*). Displays the user ID.

[4] **BFY** 🔑 *(required, numeric field; 2 positions)*. Key in the last 2 digits of the budget fiscal year.

[5] **Budget Object Code** 🔑 *(required, alphanumeric field; 4 positions)*. Key in the code that identifies the item or service.

[6] **Obj Cls** *(optional, alphanumeric field; 3 positions)*. Key in the code from the OCLS that best describes the object being defined by this BOC.

[7] **Fed Obj Cls** *(optional, alphanumeric field; 2 positions)*. Key in the code from the OCAT that best describes the object being defined on this line.

[8] **BOC PS Ind** *(optional default, alpha field; 1 position)*. Key in ***Y*** if this line is payroll-related. Otherwise, key in ***N***. Do not change this indicator in the middle of a fiscal year. If left blank, the system defaults to ***N***.

[9] **Sub BOC Ind** *(optional default, alpha field; 1 position)*. Key in ***Y*** if subobject codes are required on accounting documents when this budget object code is used. If left blank, the system defaults to ***N***.

[10] **1099 Ind** *(optional default, alpha field; 1 position)*. Key in ***Y*** if disbursements under this budget object code are included on the SF-1099 report. If left blank, the system defaults to ***N***.

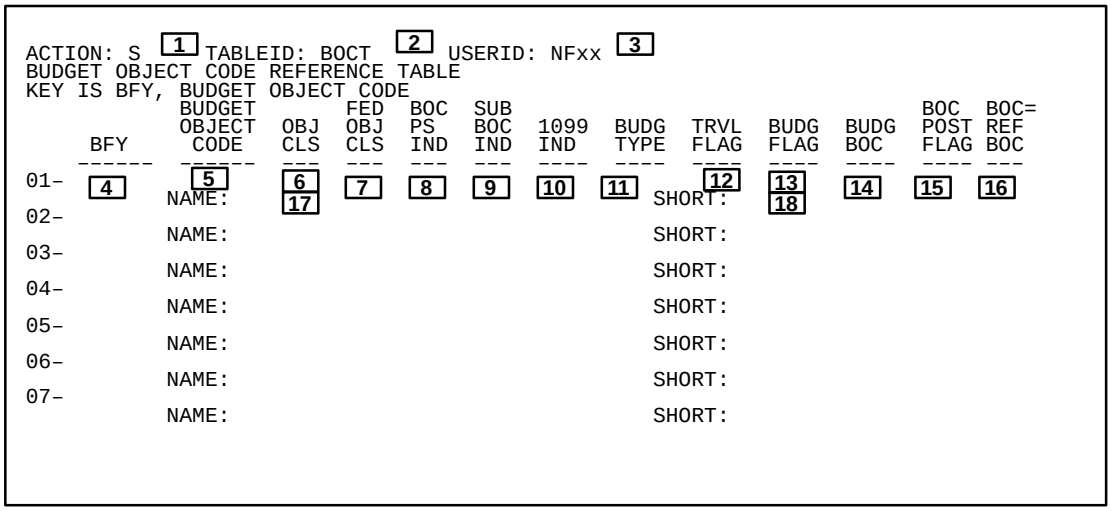

Figure 8:16. Budget Object Code Reference Table (BOCT)

11 **Budg Type** *(conditional, alpha field; 1 position)*. If the Budg Flag (**Field 13**) is ***Y***, key in one of the following to indicate what can be budgeted to this budget object class.

- ***D*** = Dollars
- ***F*** = FTEs
- ***B*** = Both

If the Budg Flag (**Field 13**) is ***N***, this field defaults to ***N***. Otherwise, this field defaults to ***D***.

12 **Trvl Flag** *(optional default, alpha field; 1 position)*. Key in ***Y*** to indicate that travel type is required on accounting documents when this budget object code is referenced. If left blank, the system defaults to ***N***.

13 **Budg Flag** *(optional default, alpha field; 1 position)*. Key in ***Y*** if this object code is used to establish a budget. Otherwise, key in ***N***. If left blank, the system defaults to ***Y***.

14 **Budg BOC** *(conditional, alphanumeric field; 4 positions)*. If the Budg Flag (**Field 13**) is ***N***, key in a budget BOC. If the Budg Flag is ***Y***, leave blank.

15 **BOC Post Flag** *(optional default, alpha field; 1 position)*. Key in ***Y*** if the budget object code should be used when accessing the ACED for posting to the General Ledger. The BOC/RSRC post flag in the ACEV must also be ***Y*** for the accounting event specified in the ACEN. If left blank, the system defaults to ***N***.

16 **BOC=Ref BOC** *(conditional, alpha field; 1 position)*. If the document must use the same BOC as the referenced BOC, key in ***Y***. If the BOC on the referencing document may differ from that on the referenced document, key in ***N***; however, they both must have the same budget BOC. If left blank, the system defaults to ***N***.

17 **Name** *(optional, alphanumeric field; max. of 30 positions)*. Key in a description of the budget object code to appear on reports.

18 **Short** *(optional, alphanumeric field; max. of 12 positions)*. Key in the budget object code short name to appear on reports when there is not enough room for the full name.

After keying in the data, press [Enter]. All records (lines) that are error-free or tagged with warning messages are added; records that contain either overrideable or fatal errors are not added. The message *All Lines Added* is displayed at the bottom of the screen to indicate that all or some records have been added; if any records contain errors, error messages are also displayed. For more information about error messages and correcting errors, see **Part 2, System Edits**.

- To add another record, repeat the above process.

Performing Other Actions. For instructions on displaying, changing, and deleting a record, or performing any other action, see **Part 2, Using Tables**.

Calendar Date Reference Table (CLDT)

The CLDT is used to:

- Define valid calendar dates used on documents, in tables, and as parameters.
- Associate each calendar date with the appropriate accounting period.

To access the CLDT, at the FFS screen, key in ***N*** at the Action field and ***CLDT*** at the TableID field, then press [Enter]. The CLDT screen (**Figure 8:17**) is displayed with an ***S*** in the Action field.

Instructions for adding are discussed below.

Note: If you are not authorized to perform a specific processing action (adding, changing, or deleting a record) in this table, contact your Functional Administrator responsible for Table Maintenance.

Adding A Record. At the CLDT screen, complete the fields as follows:

[1] **Action** *(required, alpha field; 1 position)*. Key in ***A***.

[2] **TableID** (*no-entry*). Displays ***CLDT***.

[3] **UserID** (*no-entry*). Displays the user ID.

[4] **Date Of Record** 🔑 *(required, alphanumeric field; 6 positions)*. Key in the calendar date in the *yymmdd* format.

[5] **Fiscal Month** *(required, numeric field; 2 positions)*. Key in the accounting period month.

[6] **Fiscal Year** *(required, numeric field; 2 positions)*. Key in the accounting period year.

After keying in the data, press [Enter]. All records (lines) that are error-free or tagged with warning messages are added; records that contain either overrideable or fatal errors are not added. The message *All Lines Added* is displayed at the bottom of the screen to indicate that all or some records have been added; if any records contain errors, error messages are also displayed. For more information about error messages and correcting errors, see **Part 2, System Edits**.

- To add another record, repeat the above process.

Performing Other Actions. For instructions on displaying, changing, and deleting a record, or performing any other action, see **Part 2, Using Tables**.

```
ACTION: S [1] TABLEID: CLDT [2] USERID: NFxx[3]
CALENDAR DATE REFERENCE TABLE
KEY IS DATE OF RECORD

    DATE OF RECORD FISCAL MONTH FISCAL YEAR
    -------------- ------------ -----------
01-     [4]            [5]          [6]
02-
03-
04-
05-
06-
07-
08-
09-
10-
11-
12-
13-
14-
15-
```

Figure 8:17. Calendar Date Reference Table (CLDT)

Text Clause Reference Table (CLTX)

The CLTX is used to define the text of standard clauses used in printed documents. Text is stored in this table in the form of separate clauses. Each clause is identified individually. Text clauses may be associated with one or more text types in the TXTP. The text type is the code which is actually entered in the documents.

To access the CLTX, at the FFS screen, key in ***N*** at the Action field and ***CLTX*** at the TableID field, then press [Enter]. The CLTX screen (**Figure 8:18**) is displayed with an ***S*** in the Action field.

Instructions for adding are discussed below.

Note: If you are not authorized to perform a specific processing action (adding, changing, or deleting a record) in this table, contact your Functional Administrator responsible for Table Maintenance.

Adding A Record. At the CLTX screen, complete the fields as follows:

[1] **Action** *(required, alpha field; 1 position)*. Key in ***A***.

[2] **TableID** (*no-entry*). Displays ***CLTX***.

[3] **UserID** (*no-entry*). Displays the user ID.

[4] **Clause Number** 🔑 *(required, alphanumeric field; 2 positions)*. Key in a value identifying this text clause.

[5] **Text** *(optional, alphanumeric field; max. of 699,930 positions)*. Key in the desired text. There are a max. of 9999 lines with a max. of 70 positions for each line.

[6] **Text Line** 🔑 *(optional default, numeric field; 4 positions)*. Key in the line number. If left blank, the system defaults to a number based on the last line number used.

After keying in the data, press [Enter]. All records (lines) that are error-free or tagged with warning messages are added; records that contain either overrideable or fatal errors are not added. The message *All Lines Added* is displayed at the bottom of the screen to indicate that all or some records have been added; if any records contain errors, error messages are also displayed. For more information about error messages and correcting errors, see **Part 2, System Edits**.

- To add another record, repeat the above process.

Performing Other Actions. For instructions on displaying, changing, and deleting a record, or performing any other action, see **Part 2, Using Tables**.

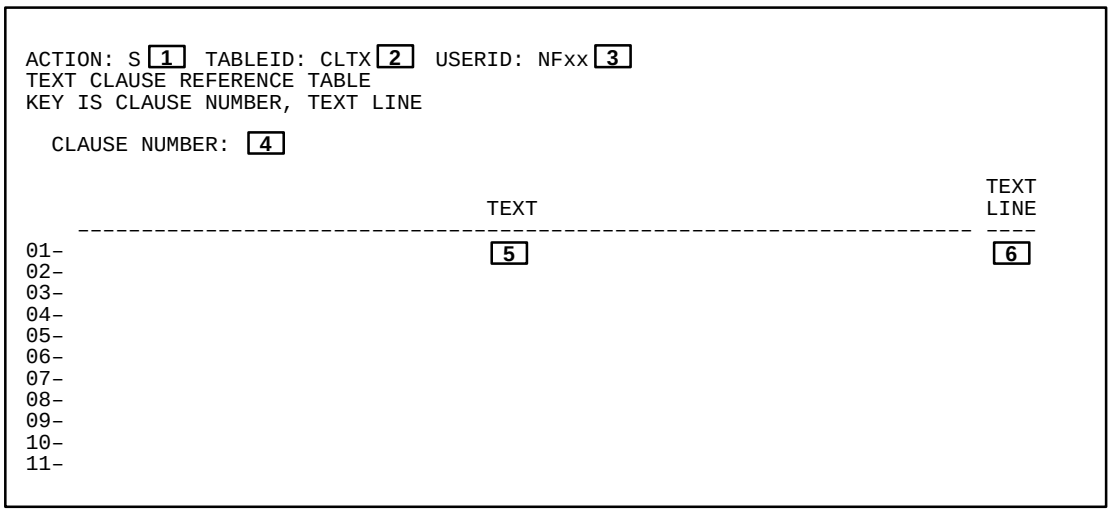

Figure 8:18. Text Clause Reference Table (CLTX)

FFIS Communication Response Table (COMR)

The COMR is used to:

- Allow the Departmentwide Standards Team and/or user-support staff to respond to client questions/requests submitted through the COMT.
- Automatically log the respondent's user ID, date, and time.

Note: This table is updated by the COMT. Records can be changed, deleted, or displayed at this table; records cannot be added.

To access the COMR, at the FFS screen, key in ***N*** at the Action field. Key in ***COMR*** at the TableID field. Press [Enter]. The COMR screen (**Figure 8:19**) is displayed with an ***S*** in the Action field.

Instructions for changing are discussed below.

Note: If you are not authorized to perform a specific processing action (changing or deleting a record) in this table, contact your Functional Administrator responsible for Table Maintenance.

Changing A Record. At the COMR screen, complete the fields as follows:

[1] **Action** *(required, alpha field; 1 position)*. Key in ***C***.

[2] **TableID** (*no-entry*). Displays ***COMR***.

[3] **UserID** (*no-entry*). Displays the user ID.

[4] **Request Type** 🔑 *(no-entry)*. Displays the request type from the COMT as follows:

Q = Question
R = Request

[5] **Application ID** 🔑 *(no-entry*). Displays the application ID.

[6] **Seq #** 🔑 *(no-entry*). Displays the sequence number of the question/request from the COMT.

[7] **Requester** *(no-entry)*. Displays the requester's user ID.

[8] **Request Date** (*no-entry*). Displays the date of the request.

[9] **Request Time** *(no-entry)*. Displays the time of the question/request from the COMT.

[10] **Communication Text** *(no-entry)*. Displays the question/request from the COMT.

[11] **Response Text** *(required, alphanumeric field; max. of 350 positions)*. Key in the response to the question/request. There is a maximum of 70 positions for each of the 5 lines.

[12] **Responder** *(no-entry)*. Displays the respondent's user ID.

[13] **Response Date** *(no-entry)*. Displays the date of the response.

[14] **Response Time** *(no-entry)*. Displays the time of the response.

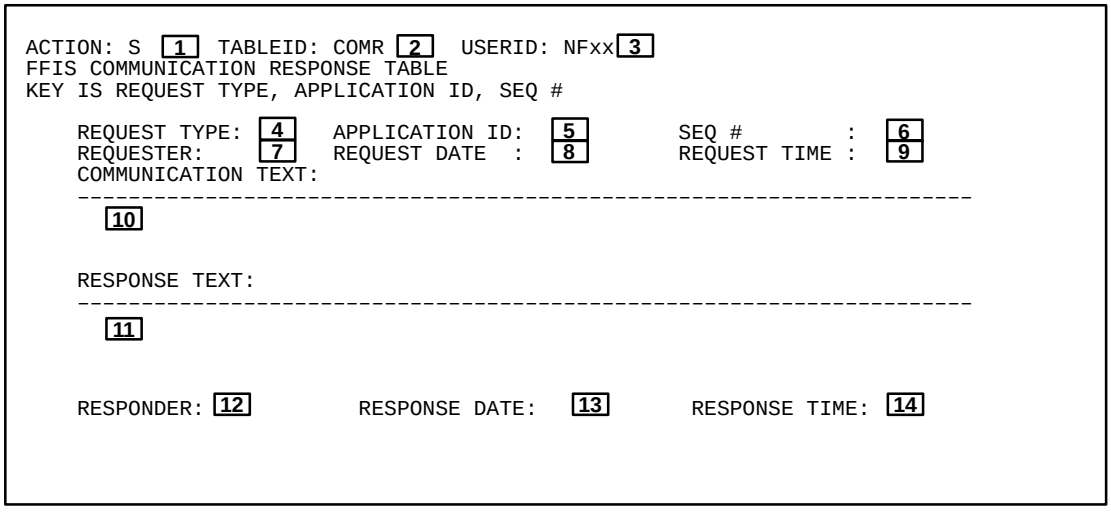

Figure 8:19. FFIS Communciation Response Table (COMR)

After keying in the data, press [Enter]. All records (lines) that are error-free or tagged with warning messages are changed; records that contain either overrideable or fatal errors are not changed. The message *All Lines Changed* is displayed at the bottom of the screen to indicate that all or some records have been added; if any records contain errors, error messages are also displayed. For more information about error messages and correcting errors, see **Part 2, System Edits**.

- To change another record, repeat the above process.

Performing Other Actions. For instructions on displaying and deleting a record, or performing any other action, see **Part 2, Using Tables**.

FFIS Communication Table (COMT)

The COMT is used to:

- Allow a user to log-in a request for a change to a common table.
- Allow a user to request assistance relating to problems or questions about the system.
- Automatically log-in the requester's user ID, and the date and time of the question or request.

To access the COMT, at the FFS screen, key in ***N*** at the Action field. Key in ***COMT*** at the TableID field. Press [Enter]. The COMT screen (**Figure 8:20**) is displayed with an ***S*** in the Action field.

Instructions for adding are discussed below.

Note: If you are not authorized to perform a specific processing action (adding, changing, or deleting a record) in this table, contact your Functional Administrator responsible for Table Maintenance.

Adding A Record. At the COMT screen, complete the fields as follows:

[1] **Action** *(required, alpha field; 1 position)*. Key in ***A***.

[2] **TableID** (*no-entry*). Displays ***COMT***.

[3] **UserID** (*no-entry*). Displays the user ID.

[4] **Request Type** *(required, alpha field; 1 position)*. Key in the request type as follows:

Q = Question
R = Request

[5] **Application ID** *(no-entry*). Displays the application identification.

[6] **Seq #** (*no-entry*). Displays the sequence number of the question/request.

[7] **Request Date** *(no-entry)*. Displays the date of the request.

[8] **Request Time** *(no-entry)*. Displays the time of the request.

[9] **Communication Text** *(required, alphanumeric field; max. of 350 positions)*. Key in the question/request. There is a maximum of 70 positions for each of the 5 lines.

```
ACTION: S [1] TABLEID: COMT [2] USERID: NFxx    [3]
FFIS COMMUNICATION TABLE
KEY IS REQUEST TYPE, APPLICATION ID, SEQ #

    REQUEST TYPE:  [4]  APPLICATION ID:  [5]      SEQ #        :  [6]
    REQUESTER:     [7]  REQUEST DATE  :  [8]      REQUEST TIME :  [9]
    COMMUNICATION TEXT:
    ------------------------------------------------------------------------

     [10]
```

Figure 8:20. FFIS Communication Table (COMT)

After keying in the data, press [Enter]. All records (lines) that are error-free or tagged with warning messages are added; records that contain either overrideable or fatal errors are not added. The message *All Lines Added* is displayed at the bottom of the screen to indicate that all or some records have been added; if any records contain errors, error messages are also displayed. For more information about error messages and correcting errors, see **Part 2, System Edits**.

- To add another record, repeat the above process.

Performing Other Actions. For instructions on displaying, changing, and deleting a record, or performing any other action, see **Part 2, Using Tables**.

Dates Table (DATE)

The DATE is used to store current date information for each document suspense transaction type.

To access the DATE, at the FFS screen, key in ***N*** at the Action field and ***DATE*** at the TableID field, then press [Enter]. The DATE screen (**Figure 8:21**) is displayed with an ***S*** in the Action field.

Instructions for adding are discussed below.

Note: If you are not authorized to perform a specific processing action (adding, changing, or deleting a record) in this table, contact your Functional Administrator responsible for Table Maintenance.

Adding A Record. At the DATE screen, complete the fields as follows:

[1] **Action** *(required, alpha field; 1 position)*. Key in ***A***.

[2] **TableID** (*no-entry*). Displays ***DATE***.

[3] **UserID** (*no-entry*). Displays the user ID.

[4] **Dates Key** 🔑 *(required, alphanumeric field; 4 positions)*. Key in the transaction code (document type) that is being processed.

[5] **Current Date YYMMDD** *(required, numeric field; 6 positions)*. Key in today's date.

[6] **Current Date-Name Month** *(optional, alpha field; max. of 9 positions)*. Key in the literal representation of the current month (i.e., ***January***).

[7] **Current Date-Name Year** *(optional, numeric field; 2 positions)*. Key in the literal representation of the current year (i.e., ***01***).

[8] **Current Period** *(required, numeric field; max. of 2 positions)*. Key in the current processing period (i.e., ***02***).

[9] **Current Fiscal Year** *(required, numeric field; 2 positions)*. Key in the annual accounting cycle to be used to enter data and produce reports.

[10] **Current Fiscal Name** *(optional, numeric field; 4 positions)*. Key in a literal representation of the current processing year (i.e., ***2001***).

[11] **Application-Specific Date YYMMDD** *(optional, numeric field; 6 positions)*. Key in the calendar year month date.

[12] **Application-Specific Period** *(optional, alphanumeric field; 4 positions)*. Key in the processing period.

[13] **Application Year** *(optional, numeric field; 2 positions)*. Key in the last 2 positions of the year.

```
ACTION: S  [1] TABLEID: DATE  [2] USERID: NFxx   [3]
    DATES TABLE
    KEY IS DATES KEY
          -----------------CURRENT----------------  -APPLICATION-SPECIFIC-
    DATES  DATE     DATE-NAME              FISCAL    DATE
     KEY  YYMMDD   MONTH    YEAR  PERIOD  YEAR NAME  YYMMDD  PERIOD   YEAR
    -----  ------  --------------  ------  ---------  ------  ------   ----
01-  [4]   [5]      [6]     [7]     [8]    [9]  [10]   [11]    [12]     [13]
02-
03-
04-
05-
06-
07-
08-
09-
10-
11-
12-
13-
```

Figure 8:21. Dates Table (DATE)

After keying in the data, press [Enter]. All records (lines) that are error-free or tagged with warning messages are added; records that contain either overrideable or fatal errors are not added. The message *All Lines Added* is displayed at the bottom of the screen to indicate that all or some records have been added; if any records contain errors, error messages are also displayed. For more information about error messages and correcting errors, see **Part 2, System Edits**.

- To add another record, repeat the above process.

Performing Other Actions. For instructions on displaying, changing, and deleting a record, or performing any other action, see **Part 2, Using Tables**.

Document Tracking Data Entry Table (DCTE)

The DCTE is used to enter specific documents tracked by FFIS. The documents are defined by transaction code and document number.

To access the DCTE, at the FFS screen, key in ***N*** at the Action field and ***DCTE*** at the TableID field, then press [Enter]. The DCTE screen (**Figure 8:22**) is displayed with an ***S*** in the Action field.

Instructions for adding are discussed below.

Note: If you are not authorized to perform a specific processing action (adding, changing, or deleting a record) in this table, contact your Functional Administrator responsible for Table Maintenance.

Adding A Record. At the DCTE screen, complete the fields as follows:

[1] **Action** *(required, alpha field; 1 position)*. Key in ***A***.

[2] **TableID** (*no-entry*). Displays ***DCTE***.

[3] **UserID** (*no-entry*). Displays the user ID.

[4] **Document ID** 🔑 *(required, numeric field; 13 positions)*. Key in the transaction code and document number for the document tracked. The document number is the number associated with this document upon entry into the system. The combination of transaction code and document number is edited to see that this combination does not already exist in the Document Tracking tables.

[5] **Document Date** *(required, numeric field; 6 positions)*. Key in the date of record for the document to be tracked.

[6] **Type** *(optional, alphanumeric field; 1 position)*. Key in the appropriate document type.

[7] **Responsibility Code** *(optional, alphanumeric field; 2 positions)*. Key in the code that identifies the person responsible for this document. See the RESP for valid responsibility codes.

[8] **Name** *(no-entry)*. Displays the name of the person associated with the responsibility code (**Field 7**) from the RESP.

[9] **Div** *(no-entry)*. Displays the division code associated with the responsibility code (**Field 7**) from the RESP.

[10] **Amount** *(required, numeric field; max. of 19 positions)*. Key in the amount of this document. If no decimal point is entered, two decimals places are assumed. Do not enter commas or a dollar sign.

[11] **Document Source** *(optional, alphanumeric field; max. of 30 positions)*. Key in the source of this document.

[12] **Description** *(optional, alphanumeric field; max. of 30 positions)*. Key in a description of the tracked document.

[13] **Last Line Num** *(no-entry)* Displays the line number of the last tracking line added for this document. This field is used by the document processors to determine the line number used when adding processed tracking lines. This number is not decreased when an activity line is deleted. It always shows the line number of the last line created for a given document.

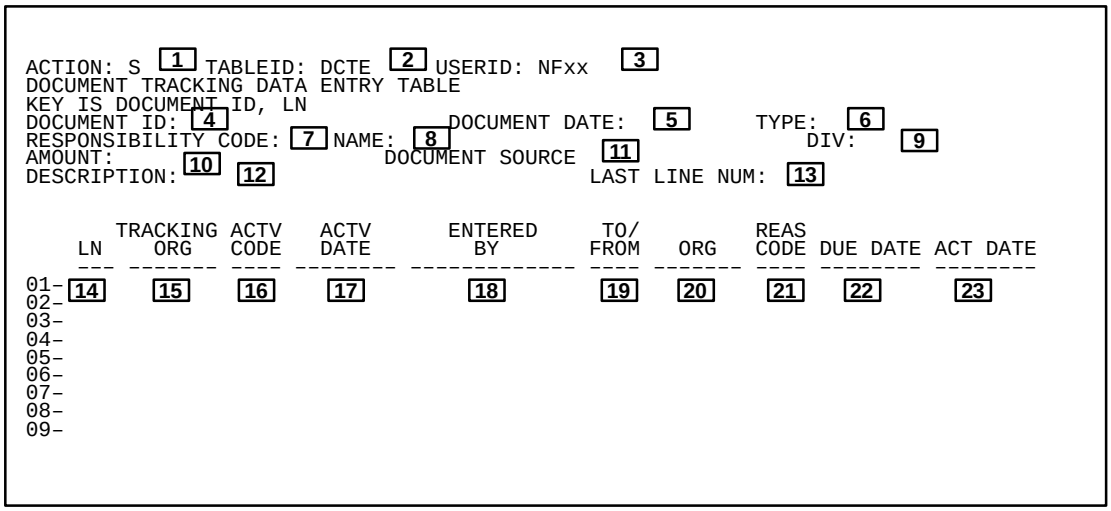

Figure 8:22. Document Tracking Data Entry Table (DCTE)

14 **Ln** *(required, numeric field; 3 positions)*. Key in a different number for each line, from ***001*** to ***999***. The line number entered must not already exist for this document.

15 **Tracking Org** *(conditional, alphanumeric field; 7 positions)*. If line information is being entered, key in the code for the organization tracking the document. This code is used to limit access to only authorized users.

16 **Actv Code** *(conditional, alphanumeric field; 4 positions)*. If line information is being entered, key in the activity code appropriate for this line. See the DACT for valid activity type codes (the code cannot have an activity type of **PROC**).

17 **Actv Date** *(optional default, numeric field; 6 positions)*. Key in the date associated with this activity line. If left blank, the system defaults to the date the record is accepted (current date).

18 **Entered By** *(optional, alphanumeric field; max. of 13 positions)*. Key in the name of the person entering this activity line.

19 **To/From** *(optional, alphanumeric field; 4 positions)*. Key in the code of the person or group to whom the document is being sent (if this is a *To line*) or received from (if this is a *From line*). See the TOFM for valid codes.

20 **Org** *(optional, alphanumeric field; 5 positions)*. Key in the code of the organization to which the document is being sent (if this is a *To line*) or received from (if this is a *From line*).

21 **Reas Code** *(conditional, alphanumeric field; 4 positions)*. If the activity type derived from the DACT is **TO** or **RTV**, key in the reason code for this activity line. Otherwise, this field is optional. See the RSCD for valid reason codes.

22 **Due Date** *(optional, numeric field; 6 positions)*. Key in the due date for this activity line.

23 **Act Date** *(optional, numeric field; 6 positions)*. Key in the actual date associated with the activity line. This date is used to determine discrepancies between due date and actual date for productivity reporting.

After keying in the data, press [Enter]. All records (lines) that are error-free or tagged with warning messages are added; records that contain either overrideable or fatal errors are not added. The message *All Lines Added* is displayed at the bottom of the screen to indicate that all or some records have been added; if any records contain errors, error messages are also displayed. For more information about error messages and correcting errors, see **Part 2, System Edits**.

- To add another record, repeat the above process.

Performing Other Actions. For instructions on displaying, changing, and deleting a record, or performing any other action, see **Part 2, Using Tables**.

Treasury Disbursing Office Reference Table (DISB)

The DISB is used to:

- Establish an identification code and name for each Treasury Disbursing Office.
- Derive the agency location code for agencies that print their own checks.

To access the DISB, at the FFS screen, key in ***N*** at the Action field and ***DISB*** at the TableID field, then press [Enter]. The DISB screen (**Figure 8:23**) is displayed with an ***S*** in the Action field.

Instructions for adding are discussed below.

Note: If you are not authorized to perform a specific processing action (adding, changing, or deleting a record) in this table, contact your Functional Administrator responsible for Table Maintenance.

Adding A Record. At the DISB screen, complete the fields as follows:

[1] **Action** *(required, alpha field; 1 position)*. Key in ***A***.

[2] **TableID** (*no-entry*). Displays ***DISB***.

[3] **UserID** (*no-entry*). Displays the user ID.

[4] **Fisc Year** 🔑 *(required, numeric field; 2 positions)*. Key in the last 2 digits of the applicable fiscal year.

[5] **D.O.** 🔑 *(required, alphanumeric field; 4 positions)*. Key in the code that defines the disbursing office.

[6] **Print Check Ind** *(optional default, alpha field; 1 position)*. Key in ***Y*** if the disbursing office prints its own checks. Key in ***N*** if the disbursing office is Treasury-disbursing. If left blank, the system defaults to ***N***.

[7] **Align Use Real Checks Ind** *(optional default, alpha field; 1 position)*. Key in ***Y,*** if the Print Check Indicator is ***Y*** and real checks are used to align checks prior to printing. Key in ***N***, if check facsimiles are used. If left blank, the system defaults to ***N***.

[8] **Disb Office Name** *(optional, alpha field; max. of 30 positions)*. Key in a name for each disbursing office.

[9] **Disb Office Address Line 1** *(optional, alphanumeric field; max. of 30 positions)*. Key in the first line of the address for each disbursing office.

[10] **Disb Office Address Line 2** *(optional, alphanumeric field; max. of 30 positions)*. Key in the second line of the address for each disbursing office.

[11] **Disb Office Address Line 3** *(optional, alphanumeric field; max. of 30 positions)*. Key in the last line of the address for each disbursing office.

[12] **Disb Telephone Number** *(optional, numeric field; 10 positions)*. Key in the telephone number for the disbursing office.

[13] **Agency Loc Code** *(conditional, alphanumeric field; 8 positions)*. If the agency location code indicator in the DOPT is ***D***, key in the agency location code for the disbursing office. Otherwise, leave blank.

[14] **Bureau Code** *(conditional, alphanumeric field; 8 positions)*. If the agency location code is entered, key in the bureau code applicable for the disbursing office. Otherwise, optional.

```
ACTION: S [1] TABLEID: DISB [2] USERID: NFxx [3]
TREASURY DISBURSING OFFICE REFERENCE TABLE
KEY IS FISC YEAR, D.O
01–
    FISC YEAR: [4]  D.O.: [5]  PRINT CHECK IND: [6] ALIGN USE REAL CHECKS IND: [7]
    DISB OFFICE NAME:      [8]
    DISB ADDRESS LINE 1:   [9]
    DISB ADDRESS LINE 2:   [10]
    DISB ADDRESS LINE 3:   [11]
    DISB TELEPHONE NUMBER: ( [12] )     –
    AGENCY LOC CODE:   [13]          BUREAU CODE:   [14]
    DISB RUN NUMBER:   [15]       RUN IN PROGRESS:  [16]
02–
    FISC YEAR:     D.O.:       PRINT CHECK IND:    ALIGN USE REAL CHECKS IND:
    DISB OFFICE NAME:
    DISB ADDRESS LINE 1:
    DISB ADDRESS LINE 2:
    DISB ADDRESS LINE 3:
    DISB TELEPHONE NUMBER: (      )     –
    AGENCY LOC CODE:             BUREAU CODE:
    DISB RUN NUMBER:            RUN IN PROGRESS:
```

Figure 8:23. Treasury Disbursing Office Reference Table (DISB)

15 **Disb Run Number** *(no-entry)*. Displays the voucher selection process and is used by the Accounts Payable and Automated Disbursements functions to determine whether or not a given voucher has been selected by the Automated Disbursements process. Initially, set to ***0***, if the print check indicator is ***Y***, this number increases by one each time voucher selection is run.

16 **Run In Progress** *(optional, alpha field; 1 position)*. Key in ***Y*** for *yes* or ***N*** for *no.* The flag is used by the Accounts Payable and Automated Disbursements functions to determine whether or not Automated Disbursements has been initiated by that disbursing office. Also, you can change this flag from ***Y*** to ***N*** or from ***N*** to ***Y***. If the Print Check indicator is ***Y***, voucher selection changes this value to ***Y*** and check posting changes to ***N***.

After keying in the data, press [Enter]. All records (lines) that are error-free or tagged with warning messages are added; records that contain either overrideable or fatal errors are not added. The message *All Lines Added* is displayed at the bottom of the screen to indicate that all or some records have been added; if any records contain errors, error messages are also displayed. For more information about error messages and correcting errors, see **Part 2, System Edits**.

- To add another record, repeat the above process.

Performing Other Actions. For instructions on displaying, changing, and deleting a record, or performing any other action, see **Part 2, Using Tables**.

Discount Lost Reason Code Reference Table (DLRC)

The DLRC is used to define a unique code and description for each reason that a discount was not taken on a given disbursement.

To access the DLRC, at the FFS screen, key in ***N*** at the Action field and ***DLRC*** at the TableID field, then press [Enter]. The DLRC screen (**Figure 8:24**) is displayed with an ***S*** in the Action field.

Instructions for adding are discussed below.

Note: If you are not authorized to perform a specific processing action (adding, changing, or deleting a record) in this table, contact your Functional Administrator responsible for Table Maintenance.

Adding A Record. At the DLRC screen, complete the fields as follows:

1 **Action** *(required, alpha field; 1 position)*. Key in ***A***.

2 **TableID** (*no-entry*). Displays ***DLRC***.

3 **UserID** (*no-entry*). Displays the user ID.

4 **Discount Lost Reason Code** *(required, alphanumeric field; 1 position)*. Key in a code to identify the reason for the discount lost.

5 **Description** *(optional, alphanumeric field; max. of 30 positions)*. Key in a description for the reason that the discount was not taken.

6 **Discount Lost Reason Category** *(required, alpha field; 1 position)*. Key in the reason the discount was lost. Valid values are:

- ***R*** = Delay in paying Office Receipt of Receiving Report.
- ***I*** = Delay in paying Office Receipt of Proper Invoice.
- ***O*** = Delay in paying Office Receipt of PO or Contract.
- ***N*** = Delay/error by paying Office in Defective Invoice.
- ***S*** = Delay/error by paying Office in System Processing.
- ***E*** = Not economically justified.

After keying in the data, press [Enter]. All records (lines) that are error-free or tagged with warning messages are added; records that contain either overrideable or fatal errors are not added. The message *All Lines Added* is displayed at the bottom of the screen to indicate that all or some records have been added; if any records contain errors, error messages are also displayed. For more information about error messages and correcting errors, see **Part 2, System Edits**.

- To add another record, repeat the above process.

Performing Other Actions. For instructions on displaying, changing, and deleting a record, or performing any other action, see **Part 2, Using Tables**.

```
ACTION: S [1]  TABLEID: DLRC [2]  USERID: NFxx    [3]
DISCOUNT LOST REASON CODE REFERENCE TABLE
KEY IS DISCOUNT LOST REASON CODE

    DISCOUNT LOST                                    DISCOUNT LOST
     REASON CODE            DESCRIPTION             REASON CATEGORY
    -------------  ------------------------------  ---------------
01-      [4]                  [5]                       [6]
02-
03-
04-
05-
06-
07-
08-
09-
10-
11-
12-
13-
14-
```

Figure 8:24. Discount Lost Reason Code Reference Table (DLRC)

Disbursing Options Reference Table (DOPT)

The DOPT is used to identify system-wide options and default values used by the disbursements processes.

To access the DOPT, at the FFS screen, key in ***N*** at the Action field and ***DOPT*** at the TableID field, then press [Enter]. The DOPT screen (**Figure 8:25**) is displayed with an ***S*** in the Action field.

Instructions for adding are discussed below.

Note: If you are not authorized to perform a specific processing action (adding, changing, or deleting a record) in this table, contact your Functional Administrator responsible for Table Maintenance.

Adding A Record. At the DOPT screen, complete the fields as follows:

1 **Action** *(required, alpha field; 1 position)*. Key in ***A***.

2 **TableID** *(no-entry)*. Displays ***DOPT.***

3 **UserID** *(no-entry)*. Displays the user ID.

4 **Fiscal Year** *(required, numeric field; 2 positions)*. Key in the last 2 digits of the applicable fiscal year.

5 **Disbursing Office** *(optional, alphanumeric field; 4 positions)*. Key in the disbursing office used in all spending transactions when an alternate disbursing office is not specified.

6 **Disbursing Lag Days** (*optional default, numeric field; 2 positions*). Key in the number of days to subtract from the calculated payment date to determine the voucher selection date. This field is used to account for a lag between voucher selection and the actual payment date. If left blank, the system defaults to ***0***.

7 **Use FUND Int Orgn** *(optional, alpha field; 1 position)*. Key in ***Y*** to use the interest organization in the FUND for posting interest.

8 **Use FUND Disc Orgn** *(optional, alpha field; 1 position)*. Key in ***Y*** to use the discount organization in the FUND for posting discounts.

9 **Use FUND Int Pgm** *(optional, alpha field; 1 position)*. Key in ***Y*** to use the interest program in the FUND for posting interest.

10 **Use FUND Disc Pgm** *(optional, alpha field; 1 position)*. Key in ***Y*** to use the discount program in the FUND for posting discounts.

11 **Use FUND Int BOC** *(optional, alpha field; 1 position)*. Key in ***Y*** to use the interest budget object code in the FUND for posting interest.

12 **Use FUND Disc BOC** *(optional, alpha field; 1 position)*. Key in ***Y*** to use the discount budget object code in the FUND for posting discounts.

13 **Use FUND Int Job No** *(optional, alpha field; 1 position)*. Key in ***Y*** to use the interest job number in the FUND for posting interest.

```
ACTION: S  1 TABLEID: DOPT  2  USERID: NFxx  3
DISBURSING OPTIONS REFERENCE TABLE
KEY IS FISCAL YEAR
FISCAL YEAR: 4  DISBURSING OFFICE: 5     DISBURSING LAG DAYS: 6
----- INTEREST FIELDS -----              ----- DISCOUNT FIELDS -----
USE FUND INT ORGN:     7                 USE FUND DISC ORGN:      8
USE FUND INT PGM:      9                 USE FUND DISC PGM:       10
USE FUND INT BOC:      11                USE FUND DISC BOC:       12
USE FUND INT JOB NO:   13                USE FUND DISC JOB NO:    14
USE FUND INT RPTG:     15                USE FUND DISC RPTG:      16
USE DOPT INT TRANS TYPE:  17             USE DOPT DISC TRANS TYPE: 18
INTEREST TRANS TYPE:   19                DISC TAKEN TRANS TYPE:   20
                                         DISC LOST  TRANS TYPE:   21
PROMPT PAY TYPE:       22                DISC TRANS TYPE (SPEND): 23
INTEREST REASON CODE (DOCS):24           DISC LOST RSN CODE (DOCS)25
INTEREST REASON CODE (AD):  26           DISC LOST RSN CODE (AD):    27
                                         DISC LOST RSN CODE (NOT ECON JUST): 28
PAYMENT LIMIT AMOUNT: 29                 CURRENT VALUE OF FUNDS RATE:  30
MINIMUM TFCS AMOUNT:  31                 MINIMUM NUM OF PAYMENTS:    32
POST CONFIRM FUND:    33                 POST CONFIRM TRANS TYPE:    34
PARTIAL CRD IND: 35  GROUP CHECK IND:36 TAKE CRD IF NOT GROUPING IND: 37
EFT FLAG: 38         ALC LOCATION IND:39 ACCOMPLISHED DATE REQUIRED:  40
```

Figure 8:25. Disbursing Options Reference Table (DOPT)

14 **Use FUND Disc Job No** *(optional, alpha field; 1 position)*. Key in ***Y*** to use the discount job number in the FUND for posting discounts.

15 **Use FUND Int Rptg** *(optional, alpha field; 1 position)*. Key in ***Y*** to use the interest reporting category in the FUND for posting interest.

16 **Use FUND Disc Rptg** *(optional, alpha field; 1 position)*. Key in ***Y*** to use the discount reporting category in the FUND for posting discounts.

17 **Use DOPT Int Trans Type** *(optional, alpha field; 1 position)*. Key in ***Y*** to use the interest transaction type in the DOPT for posting interest.

18 **Use DOPT Disc Trans Type** *(optional, alpha field; 1 position)*. Key in ***Y*** to use the discount transaction type specified in the DOPT for posting discounts.

19 **Interest Trans Type** *(conditional, alphanumeric field; 2 positions)*. If you wish to post different accounting entries for interest other than those posted when the payment voucher line was processed, key in the appropriate transaction type. This field is used to record a special accounting distribution for interest payments.

20 **Disc Taken Trans Type** *(optional, alphanumeric field; 2 positions)*. If separate accounting for discounts taken is needed, key in the transaction type. If used, the Automated Disbursements program calls common posting with this transaction type to post journal entries for discounts taken. The entries posted based on this transaction type are in addition to the discount taken entries posted to record the general journal impact of the discount. The entries posted based on this transaction type are typically memo entries.

21 **Disc Lost Trans Type** *(optional, alphanumeric field; 2 positions)*. If separate accounting for discounts lost is needed, key in the transaction type. If used, journal entries are posted to record discounts lost. The entries posted based on this transaction type are typically memo entries.

22 **Prompt Pay Type** *(required, alphanumeric field; 1 position)*. If the payment is subject to prompt payment and no prompt pay type has been entered in the payment document or in the VEND, key in the prompt pay type used during payment scheduling. It must be valid in the PPAY.

23 **Disc Trans Type (Spend)** *(conditional, alphanumeric field; 2 positions)*. If you wish to post different accounting entries other than those posted when the payment voucher line taking the discount was processed, key in the appropriate transaction type.

24 **Interest Reason Code (Docs)** *(optional, alphanumeric field; 1 position)*. Key in the interest reason code. See the ISRC for valid codes. This code is associated with all interest records that do not contain an interest reason code but interest was due when the payment was entered. If you wish to require this field if interest is applied, leave blank.

25 **Disc Lost Rsn Code (Docs)** *(optional, alphanumeric field; 1 position)*. Key in the default discount lost reason code used when a document is entered and a discount is determined to be lost. See the DLRC for valid codes. If you want to require this field if a discount is determined to be lost, leave blank.

26 **Interest Reason Code (AD)** *(required, alphanumeric field; 1 position)*. Key in the interest reason code. See the IRCT for valid codes. This code is associated with all interest records that do not contain an interest reason code but interest was assessed during the Automated Disbursements process.

27 **Disc Lost Rsn Code (AD)** *(required, alphanumeric field; 1 position)*. Key in the discount lost reason code used when disbursements determines a discount is lost and the payment document does not contain a discount lost reason code. See the DLRC for valid codes.

28 **Disc Lost Rsn Code (Not Econ Just)** *(required, alphanumeric field; 1 position)*. Key in the discount lost reason code used when a discount is determined to not be economically justified and no discount lost reason code was entered in the document. See the DLRC for valid codes.

29 **Payment Limit Amount** *(optional, numeric field; max. of 19 positions)*. Key in the maximum dollar amount that can be processed through the Automated Disbursements process. Checks are not grouped so that this amount is exceeded, and payments encountered that exceed this amount are not processed by the Automated Disbursements process.

30 **Current Value Of Funds Rate** *(required, numeric field; 6 positions)*. Key in the current value of funds rate issued by the Treasury. The rate must be in *99.999* format.

31 **Minimum TFCS Amount** *(optional, numeric field; max. of 19 positions)*. Key in a value establishing the minimum payment amount for TFCS transactions. Payment transactions that exceed this amount and do not have a Schedule Category of ***S,*** require an override to process.

32 **Minimum Num Of Payments** *(optional default, numeric field; max. of 5 positions)*. Key in the minimum number of payments required before the voucher selection process occurs. If the number of

payments selected for a Treasury tape or for check printing is less than this number, a fatal error is produced by the Automated Disbursements process. If left blank, the system defaults to ***0***.

33 **Post Confirm Fund** *(conditional, alphanumeric field; 6 positions)*. If the default disbursing office is Treasury-disbursing, key in the fund used when posting accomplished Treasury schedules for which detail vouchers have not been processed (manual schedules only). Otherwise, leave blank.

34 **Post Confirm Trans Type** *(conditional, alphanumeric field; 2 positions)*. If the default disbursing office is Treasury-disbursing, key in the transaction type used when posting accomplished Treasury schedules for which detail vouchers have not been processed (manual schedules only). Otherwise, leave blank.

35 **Partial Crd Ind** *(optional default, alpha field; 1 position)*. Key in ***Y*** to indicate that partial credits can be applied against a payment voucher. If ***N*** is entered, and the group check indicator is ***N***, credits are never taken by the Automated Disbursements process. If left blank, the system defaults to ***N***.

36 **Group Check Ind** *(optional default, alpha field; 1 position)*. Key in ***Y*** if payment vouchers with the same vendor code are grouped for disbursement processing and paid in one check. If left blank, the system defaults to ***N***.

37 **Take Crd If Not Grouping Ind** *(optional default, alpha field; 1 position)*. Key in ***Y*** if credits are applied against a single payment and if payment vouchers are not subject to grouping. If left blank, the system defaults to ***N***.

38 **EFT Flag** *(optional default, alpha field; 1 position)*. Key in ***Y*** if the agency is Treasury-disbursing and EFT payments (ACH or TFCS) are issued. If left blank, the system defaults to ***N***.

39 **ALC Location Ind** *(optional default, alpha field; 1 position)*. Key in ***F*** if the agency location code is stored in the FUND. Key in ***D*** if it is stored in the DISB. If left blank, the system defaults to ***N***.

40 **Accomplished Date Required** *(optional default, alpha field; 1 position)*. Key in ***Y*** if the accomplished date is a required field in a cash receipt document, SV, and the TSCH. If left blank, the system defaults to ***N***.

After keying in the data, press [Enter]. All records (lines) that are error-free or tagged with warning messages are added; records that contain either overrideable or fatal errors are not added. The message *All Lines Added* is displayed at the bottom of the screen to indicate that all or some records have been added; if any records contain errors, error messages are also displayed. For more information about error messages and correcting errors, see **Part 2, System Edits**.

- To add another record, repeat the above process.

Performing Other Actions. For instructions on displaying, changing, and deleting a record, or performing any other action, see **Part 2, Using Tables**.

Default Payment Text Reference Table (DPTX)

The DPTX is used to record the text that is printed on a check when the Comments To Print field is blank in the payment voucher and there is no text in the VTXT.

To access the DPTX, at the FFS screen, key in ***N*** at the Action field and ***DPTX*** at the TableID field, then press [Enter]. The DPTX screen (**Figure 8:26**) is displayed with an ***S*** in the Action field.

Instructions for adding are discussed below.

Note: If you are not authorized to perform a specific processing action (adding, changing, or deleting a record) in this table, contact your Functional Administrator responsible for Table Maintenance.

Adding A Record. At the DPTX screen, complete the fields as follows:

[1] **Action** *(required, alpha field; 1 position)*. Key in ***A***.

[2] **TableID** (*no-entry*). Displays ***DPTX***.

[3] **UserID** (*no-entry*). Displays the user ID.

[4] **Trans Code** *(required, alpha field; 2 positions)*. Key in the transaction code for which you want to add, change, or delete a line of text.

[5] **Text** *(optional, alphanumeric field; max. of 28 positions)*. Key in the default text used to explain the payment associated with the transaction code.

After keying in the data, press [Enter]. All records (lines) that are error-free or tagged with warning messages are added; records that contain either overrideable or fatal errors are not added. The message *All Lines Added* is displayed at the bottom of the screen to indicate that all or some records have been added; if any records contain errors, error messages are also displayed. For more information about error messages and correcting errors, see **Part 2, System Edits**.

- To add another record, repeat the above process.

Performing Other Actions. For instructions on displaying, changing, and deleting a record, or performing any other action, see **Part 2, Using Tables**.

```
ACTION: S [1] TABLEID: DPTX [2] USERID: NFxx    [3]
    DEFAULT PAYMENT TEXT REFERENCE TABLE

    KEY IS TRANS CODE

    TRANS
    CODE              TEXT
    ____  ----------------------------
01-  [4]               [5]
02-
03-
04-
05-
06-
07-
08-
09-
10-
11-
12-
13-
```

Figure 8:26. Default Payment Text Reference Table (DPTX)

Default Values Reference Table (DVAL)

The DVAL is used to define the default values that may be inferred from the codes entered on a document header or accounting line.

To access the DVAL, at the FFS screen, key in ***N*** at the Action field and ***DVAL*** at the TableID field, then press [Enter]. The DVAL screen (**Figure 8:27**) is displayed with an ***S*** in the Action field.

Instructions for adding are discussed below.

Note: If you are not authorized to perform a specific processing action (adding, changing, or deleting a record) in this table, contact your Functional Administrator responsible for Table Maintenance.

Adding A Record. At the DVAL screen, complete the fields as follows:

[1] **Action** *(required, alpha field; 1 position)*. Key in ***A***.

[2] **TableID** (*no-entry*). Displays ***DVAL.***

[3] **UserID** (*no-entry*). Displays the user ID.

Note: Fields [4] through [21] are the coded elements (key fields).

[4] **Fisc Yr** *(required, alphanumeric field; 2 positions)*. Key in the accounting fiscal year used to access this table entry.

[5] **H/L** *(conditional, alpha field; 1 position)*. If the default values entry is to be inferred from the codes on the document header, key in ***H***. If the default value entry is to be inferred from the codes on the document line, key in ***L***. If left blank, the system defaults to ***L***.

[6] **Transaction Code** *(conditional, alphanumeric field; 2 positions)*. If the H/L indicator is ***H*** (**Field 5**), key in the transaction code. If in the DVOT the transaction code is specified as DVAL access key, key in the transaction code. Otherwise, leave blank.

[7] **Transaction Type** *(conditional, alphanumeric field; 2 positions)*. If the H/L indicator is ***H*** (**Field 5**), key in the transaction type. If in the DVOT the transaction type is specified as DVAL access key, key in the transaction code. Otherwise, leave blank.

[8] **BFYs** *(conditional, numeric field; 2 positions)*. If in the DVOT the budget fiscal year is specified as DVAL access key, key in the budget fiscal year. Otherwise, leave blank.

[9] **Fund** *(conditional, alphanumeric field; max. of 3 positions)*. If in the DVOT the fund is specified as DVAL access key, key in the fund code. Otherwise, leave blank.

[10] **Div** *(conditional, alphanumeric field; 2 positions)*. If in the DVOT the division is specified as DVAL access key, key in the division code. Otherwise, leave blank.

[11] **Budget Org** *(conditional, alphanumeric field; 5 positions)*. If in the DVOT the budget organization is specified as DVAL access key, key in the budget organization code. Otherwise, leave blank.

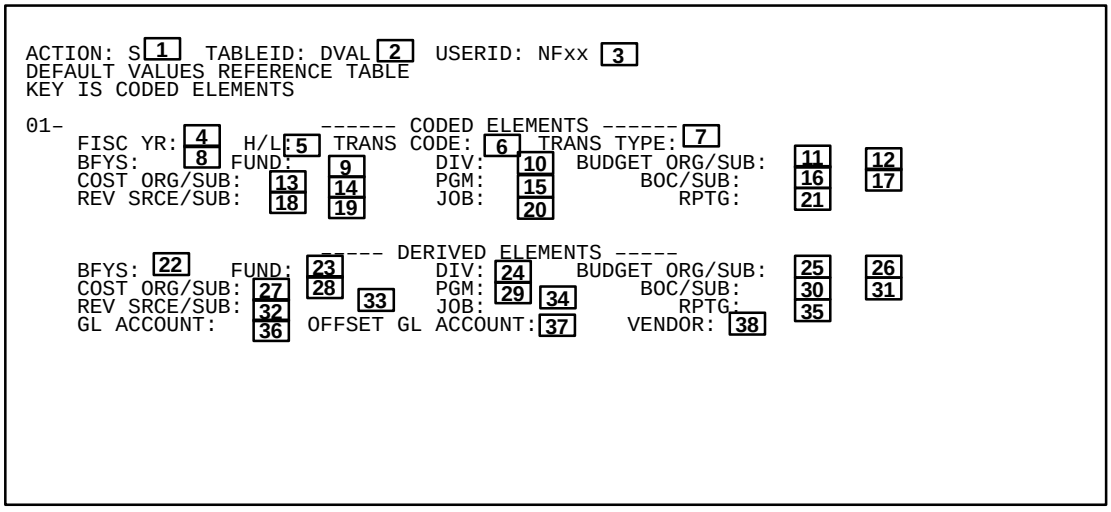

Figure 8:27. Default Values Reference Table (DVAL)

12 **Budget Sub** *(conditional, alphanumeric field; 2 positions)*. If in the DVOT the budget suborganization is specified as DVAL access key, key in the budget suborganization code. Otherwise, leave blank.

13 **Cost Org** *(conditional, alphanumeric field; 5 positions)*. If in the DVOT the cost organization is specified as DVAL access key, key in the cost organization code. Otherwise, leave blank.

14 **Cost Sub** *(conditional, alphanumeric field; 2 positions)*. If in the DVOT the cost suborganization is specified as DVAL access key, key in the cost suborganization code. Otherwise, leave blank.

15 **Pgm** *(conditional, alphanumeric field; 9 positions)*. If in the DVOT the program is specified as DVAL access key, key in the program code. Otherwise, leave blank.

16 **BOC** *(conditional, alphanumeric field; 4 positions)*. If in the DVOT the budget object class is specified as DVAL access key, key in the budget object class code. Otherwise, leave blank.

17 **Sub (BOC)** *(conditional, alphanumeric field; 2 positions)*. If in the DVOT the budget subobject class is specified as DVAL access key, key in the budget subobject class code. Otherwise, leave blank.

18 **Rev Srce** *(conditional, alphanumeric field; 4 positions)*. If in the DVOT the revenue source is specified as DVAL access key, key in the revenue source code. Otherwise, leave blank.

19 **Rev Sub** *(conditional, alphanumeric field; 2 positions)*. If in the DVOT the sub revenue source is specified as DVAL access key, key in the sub revenue source code. Otherwise, leave blank.

20 **Job** *(conditional, alphanumeric field; 8 positions)*. If in the DVOT the job is specified as DVAL access key, key in the job code. Otherwise, leave blank.

21 **Rptg** *(conditional, alphanumeric field; 2 positions)*. If in the DVOT the report is specified as DVAL access key, key in the report code. Otherwise, leave blank.

Note: Fields 22 through 38 are derived elements.

22 **BFYs** *(conditional, numeric field; 2 positions)*. If in the DVOT there is a match on the Budget Fiscal Year coded element, key in the budget fiscal year that should be moved to a document's accounting distribution line. Otherwise, leave blank.

23 **Fund** *(conditional, alphanumeric field; max. of 3 positions)*. If in the DVOT there is a match on the Fund coded element, key in the fund that should be moved to a document's accounting distribution line. Otherwise, leave blank.

24 **Div** *(conditional, alphanumeric field; 2 positions)*. If in the DVOT there is a match on the Division coded element, key in the division that should be moved to a document's accounting distribution line. Otherwise, leave blank.

25 **Budget Org** *(conditional, numeric field; 5 positions)*. If in the DVOT there is a match on the budget organization coded element, key in the budget org that should be moved to a document's accounting distribution line. Otherwise, leave blank.

26 **Budget Sub** *(conditional, numeric field; 2 positions)*. If in the DVOT there is a match on the budget suborganization coded element, key in the budget suborganization that should be moved to a document's accounting distribution line. Otherwise, leave blank.

27 **Cost Org** *(conditional, numeric field; 5 positions)*. If in the DVOT there is a match on the Cost Organization coded element, key in the cost org that should be moved to a document's accounting distribution line. Otherwise, leave blank.

28 **Cost Sub** *(conditional, numeric field; 2 positions)*. If in the DVOT there is a match on the Cost Sub coded element, key in the cost suborganization that should be moved to a document's accounting distribution line. Otherwise, leave blank.

29 **Pgm** *(conditional, numeric field; 9 positions)*. If in the DVOT there is a match on the program coded element, key in the program that should be moved to a document's accounting distribution line. Otherwise, leave blank.

30 **BOC** *(conditional, numeric field; 4 positions)*. If in the DVOT there is a match on the BOC coded element, key in the BOC that should be moved to a document's accounting distribution line. Otherwise, leave blank.

31 **Sub BOC** *(conditional, numeric field; 2 positions)*. If in the DVOT there is a match on the Sub BOC coded element, key in the fund that should be moved to a document's accounting distribution line. Otherwise, leave blank.

32 **Rev Srce** *(conditional, numeric field; 4 positions)*. If in the DVOT there is a match on the Rev Srce coded element, key in the fund that should be moved to a document's accounting distribution line. Otherwise, leave blank.

33 **Subrev Srce** *(conditional, numeric field; 2 positions)*. If in the DVOT there is a match on the Sub Rev Srce coded element, key in the fund code that

should be moved to a document's accounting distribution line. Otherwise, leave blank.

34 **Job** *(conditional, alphanumeric field; 8 positions)*. If in the DVOT there is a match on the Job (**Field 33**) coded element, key in the job code that should be moved to a document's accounting distribution line. Otherwise, leave blank.

35 **Rptg** *(conditional, numeric field; 2 positions)*. If in the DVOT there is a match on the report coded element, key in the report code that should be moved to a document's accounting distribution line. Otherwise, leave blank.

36 **GL Account** *(conditional, numeric field; 4 positions)*. If in the DVOT there is a match on the GL Account coded element, key in the GL Account that should be moved to a document's accounting distribution line. Otherwise, leave blank.

37 **Offset GL Account** *(conditional, numeric field; 4 positions)*. If in the DVOT there is a match on the Offset GL Account coded element, key in the Offset GL Account that should be moved to a document's accounting distribution line. Otherwise, leave blank.

38 **Vendor** *(conditional, alphanumeric field; 11 positions)*. If in the DVOT there is a match on the Vendor coded element, key in the vendor that should be moved to a document's accounting distribution line. Otherwise, leave blank.

After keying in the data, press [Enter]. All records (lines) that are error-free or tagged with warning messages are added; records that contain either overrideable or fatal errors are not added. The message *All Lines Added* is displayed at the bottom of the screen to indicate that all or some records have been added; if any records contain errors, error messages are also displayed. For more information about error messages and correcting errors, see **Part 2, System Edits**.

- To add another record, repeat the above process.

Performing Other Actions. For instructions on displaying, changing, and deleting a record, or performing any other action, see **Part 2, Using Tables**.

Default Values Options Reference Table (DVOT)

The DVOT is used to:

- Define how the DVAL is accessed and how the derived data elements on the accessed DVAL record is used.
- Display an alternate view of the SOPT.

To access the DVOT, at the FFS screen, key in ***N*** at the Action field and ***DVOT*** at the TableID field, then press [Enter]. The DVOT screen (**Figure 8:28**) is displayed with ***S*** in the Action field.

Instructions for adding are discussed below.

Note: If you are not authorized to perform a specific processing action (adding, changing, or deleting a record) in this table, contact your Functional Administrator responsible for Table Maintenance.

Adding A Record. At the DVOT screen, complete the fields as follows:

[1] **Action** *(required, alpha field; 1 position)*. Key in ***A***.

[2] **TableID** (*no-entry*). Displays ***DVOT***.

[3] **UserID** (*no-entry*). Displays the user ID.

[4] **Fiscal Year** 🔑 *(required, numeric field; 2 positions)*. Key in the fiscal year to which this record applies.

Note: Fields [5] through [20] are used as DVAL access keys.

[5] **Transaction Code** *(conditional, alpha field; 1 position)*. If the transaction code accounting distribution element is used as a key to access the DVAL, key in ***Y***. Otherwise, leave blank.

[6] **Transaction Type** *(conditional, alpha field; 1 position)*. If the transaction type accounting distribution element is used as a key to access the DVAL, key in ***Y***. Otherwise, leave blank.

[7] **Budget Fiscal Year** *(conditional, alpha field; 1 position)*. If the budget fiscal year accounting distribution element is used as a key to access the DVAL, key in ***Y***. Otherwise, leave blank.

[8] **Fund** *(conditional, alpha field; 1 position)*. If the fund accounting distribution element is used as a key to access the DVAL, key in ***Y***. Otherwise, leave blank.

[9] **Division** *(conditional, alpha field; 1 position)*. If the division accounting distribution element is used as a key to access the DVAL, key in ***Y***. Otherwise, leave blank.

[10] **Budget Organization** *(conditional, alpha field; 1 position)*. If the budget organization accounting distribution element is used as a key to access the DVAL, key in ***Y***. Otherwise, leave blank.

[11] **Budget Sub** *(conditional, alpha field; 1 position)*. If the budget suborganization accounting distribution element is used as a key to access the DVAL, key in ***Y***. Otherwise, leave blank.

[12] **Cost Organization** *(conditional, alpha field; 1 position)*. If the cost organization accounting distribution element is used as a key to access the DVAL, key in ***Y***. Otherwise, leave blank.

[13] **Cost Sub** *(conditional, alpha field; 1 position)*. If the cost suborganization accounting distribution element is used as a key to access the DVAL, key in ***Y***. Otherwise, leave blank.

```
ACTION: S [1] TABLEID: DVOT [2]  USERID: NFxx [3]
DEFAULT VALUES OPTIONS REFERENCE TABLE
KEY IS FISCAL YEAR
                              FISCAL YEAR: [4]
01-
                        ----- DVAL ACCESS KEYS -----
    TRANSACTION CODE:[5] TRANSACTION TYPE:[6]
    BUDGET FISCAL YEAR:[7] FUND:[8] DIVISION:[9] BUDGET ORGANIZATION/SUB:[10][11]
    COST ORGANIZATION/SUB:[12][13] PROGRAM:[14] BOC/SUB:[15][16] REV SRCE/SUB: [17][18]
    JOB:[19]     RPTG:[20]

                      ----- DVAL DERIVATION CODES -----
    BUDGET FISCAL YEAR:[21] FUND:[22] DIVISION:[23] BUDGET ORGANIZATION/SUB:[24][25]
    COST ORGANIZATION/SUB:[26][27] PROGRAM:[28] BOC/SUB:[29][30] REV SRCE/SUB: [31][32]
    JOB: [33]    RPTG:[34] GL ACCT:[35] OFFSET GL ACCT:[36] VENDOR:[37]
```

Figure 8:28. Default Values Options Reference Table (DVOT)

[14] **Program** *(conditional, alpha field; 1 position)*. If the program accounting distribution element is used as a key to access the DVAL, key in ***Y***. Otherwise, leave blank.

[15] **BOC** *(conditional, alpha field; 1 position)*. If the budget object class (BOC) accounting distribution element is used as a key to access the DVAL, key in ***Y***. Otherwise, leave blank.

[16] **Sub** *(conditional, alpha field; 1 position)*. If the sub BOC accounting distribution element is used as a key to access the DVAL, key in ***Y***. Otherwise, leave blank.

[17] **Rev Srce** *(conditional, alpha field; 1 position)*. If the revenue source accounting distribution element is used as a key to access the DVAL, key in ***Y***. Otherwise, leave blank.

[18] **Rev Sub** *(conditional, alpha field; 1 position)*. If the sub revenue source accounting distribution element is used as a key to access the DVAL, key in ***Y***. Otherwise, leave blank.

[19] **Job** *(conditional, alpha field; 1 position)*. If the job accounting distribution element is used as a key to access the DVAL, key in ***Y***. Otherwise, leave blank.

[20] **Rptg** *(conditional, alpha field; 1 position)*. If the reporting accounting distribution element is used as a key to access the DVAL, key in ***Y***. Otherwise, leave blank.

Note: Fields [21] through [37] are used as DVAL derivation codes.

[21] **Budget Fiscal Year** *(conditional, alpha field; 1 position)*. If the budget fiscal year is used to determine how to move data elements from the DVAL result fields to a document's accounting distribution line, key in one of the following codes.

- ***B*** = This field may not be coded as a DVAL result field and must always be blank on the accounting distribution line.
- ***M*** = Move the coded DVAL result field to the accounting distribution line only if the field is blank on the accounting distribution line.
- ***O*** = Use the coded DVAL result field to override the code entered on the accounting distribution line. A blank DVAL result field overrides any value entered on the accounting distribution line.

Otherwise, leave blank.

[22] **Fund** *(conditional, alpha field; 1 position)*. If the fund is used to determine how to move data elements from the DVAL result fields to a document's accounting distribution line, key in one of the codes described under the budget fiscal year (**Field 21**). Otherwise, leave blank.

[23] **Division** *(conditional, alpha field; 1 position)*. If the division is used to determine how to move data elements from the DVAL result fields to a document's accounting distribution line, key in one of the codes described under the budget fiscal year (**Field 21**). Otherwise, leave blank.

[24] **Budget Organization** *(conditional, alpha field; 1 position)*. If the budget organization is used to determine how to move data elements from the DVAL result fields to a document's accounting distribution line, key in one of the codes described under the budget fiscal year (**Field 21**). Otherwise, leave blank.

[25] **Budget Sub** *(conditional, alpha field; 1 position)*. If the budget suborganization is used to determine how to move data elements from the DVAL result fields to a document's accounting distribution line, key in one of the codes described under the budget fiscal year (**Field 21**). Otherwise, leave blank.

[26] **Cost Organization** *(conditional, alpha field; 1 position)*. If the cost organization is used to determine how to move data elements from the DVAL result fields to a document's accounting distribution line, key in one of the codes described under the budget fiscal year (**Field 21**). Otherwise, leave blank.

[27] **Cost Sub** *(conditional, alpha field; 1 position)*. If the cost organization is used to determine how to move data elements from the DVAL result fields to a document's accounting distribution line, key in one of the codes described under the budget fiscal year (**Field 21**). Otherwise, leave blank.

[28] **Program** *(conditional, alpha field; 1 position)*. If the program is used to determine how to move data elements from the DVAL result fields to a document's accounting distribution line, key in one of the codes described under the budget fiscal year (**Field 21**). Otherwise, leave blank.

[29] **BOC** *(conditional, alpha field; 1 position)*. If the budget object class is used to determine how to move data elements from the DVAL result fields to a document's accounting distribution line, key in one of the codes described under the budget fiscal year (**Field 21**). Otherwise, leave blank.

[30] **Sub** *(conditional, alpha field; 1 position)*. If the sub budget object class is used to determine how to move data elements from the DVAL result fields to a document's accounting distribution line, key in one of the codes described under the budget fiscal year (**Field 21**). Otherwise, leave blank.

31 **Rev Srce** *(conditional, alpha field; 1 position)*. If the revenue source is used to determine how to move data elements from the DVAL result fields to a document's accounting distribution line, key in one of the codes described under the budget fiscal year (**Field 21**). Otherwise, leave blank.

32 **Rev Sub** *(conditional, alpha field; 1 position)*. If the sub revenue source is used to determine how to move data elements from the DVAL result fields to a document's accounting distribution line, key in one of the codes described under the budget fiscal year (**Field 21**). Otherwise, leave blank.

33 **Job** *(conditional, alpha field; 1 position)*. If the job is used to determine how to move data elements from the DVAL result fields to a document's accounting distribution line, key in one of the codes described under the budget fiscal year (**Field 21**). Otherwise, leave blank.

34 **Rptg** *(conditional, alpha field; 1 position)*. If the reporting is used to determine how to move data elements from the DVAL result fields to a document's accounting distribution line, key in one of the codes described under the budget fiscal year (**Field 21**). Otherwise, leave blank.

35 **GL Acct** *(conditional, alpha field; 1 position)*. If the general ledger account is used to determine how to move data elements from the DVAL result fields to a document's accounting distribution line, key in one of the codes described under the budget fiscal year (**Field 21**). Otherwise, leave blank.

36 **Offset GL Acct** *(conditional, alpha field; 1 position)*. If the offset general ledger account is used to determine how to move data elements from the DVAL result fields to a document's accounting distribution line, key in one of the codes described under the budget fiscal year (**Field 21**). Otherwise, leave blank.

37 **Vendor** *(conditional, alpha field; 1 position)*. If the vendor is used to determine how to move data elements from the DVAL result fields to a document's accounting distribution line, key in one of the codes described under the budget fiscal year (**Field 21**). Otherwise, leave blank.

After keying in the data, press [Enter]. All records (lines) that are error-free or tagged with warning messages are added; records that contain either overrideable or fatal errors are not added. The message *All Lines Added* is displayed at the bottom of the screen to indicate that all or some records have been added; if any records contain errors, error messages are also displayed. For more information about error messages and correcting errors, see **Part 2, System Edits**.

- To add another record, repeat the above process.

Performing Other Actions. For instructions on displaying, changing, and deleting a record, or performing any other action, see **Part 2, Using Tables**.

Division Reference Table (DVSN)

The DVSN is used to:

- Define codes for divisions.
- Define options and controls, by division, for the Budget Execution, Planning, and Travel functions.

To access the DVSN, at the FFS screen, key in ***N*** at the Action field and ***DVSN*** at the TableID field, then press [Enter]. The DVSN screen (**Figure 8:29**) is displayed with an ***S*** in the Action field.

Instructions for adding are discussed below.

Note: If you are not authorized to perform a specific processing action (adding, changing, or deleting a record) in this table, contact your Functional Administrator responsible for Table Maintenance.

Adding A Record. At the DVSN screen, complete the fields as follows:

[1] **Action** *(required, alpha field; 1 position)*. Key in ***A***.

[2] **TableID** (*no-entry*). Displays ***DVSN***.

[3] **UserID** (*no-entry*). Displays the user ID.

[4] **Fisc Year** 🔑 *(required, numeric field; 2 positions)*. Key in the last 2 digits of the budget fiscal year.

[5] **Division** 🔑 *(required, numeric field; 2 positions)*. Key in the code used to define the division.

[6] **Division Name** *(optional, alphanumeric field; max. of 30 positions)*. Key in the division name.

[7] **Short Name** *(optional, alphanumeric field; max. of 12 positions)*. Key in the name to appear on reports when there is not enough room for the full division name.

[8] **Division Manager** *(optional, alphanumeric field; max. of 30 positions)*. Key in the division manager's name as it is to appear on reports.

[9] **Allot Status Ind** (*no-entry*). Displays ***Y*** when pending allotments for a division are submitted for approval. When this field is set to ***Y*** all allotment documents of the division are rejected until an allotment approval document is processed. Approval or rejection sets the field back to ***N***.

[10] **Allot Org** *(conditional, alpha field; 1 position)*. If this division allots funds by organization, key in ***Y***. If this division does not allot funds by organization, key in ***N***. If left blank, the system defaults to ***N***.

[11] **Allot Pgm** *(conditional, alpha field; 1 position)*. If this division allots funds by program, key in ***Y***. If program is required on spending documents but is not used for allotments, key in ***A*** . If left blank, the system defaults to ***N***.

[12] **Allot BOC** *(conditional, alpha field; 1 position)*. If this division allots funds by budget object code, key in ***Y***. If this division does not allot funds by budget object code, key in ***N***. If left blank, the system defaults to ***N***.

[13] **Rev Org** *(conditional, alpha field; 1 position)*. If this division maintains revenue budgets by organization, key in ***Y***. If this division does not maintain revenue budgets by organization, key in ***N***. If left blank, the system defaults to ***N***.

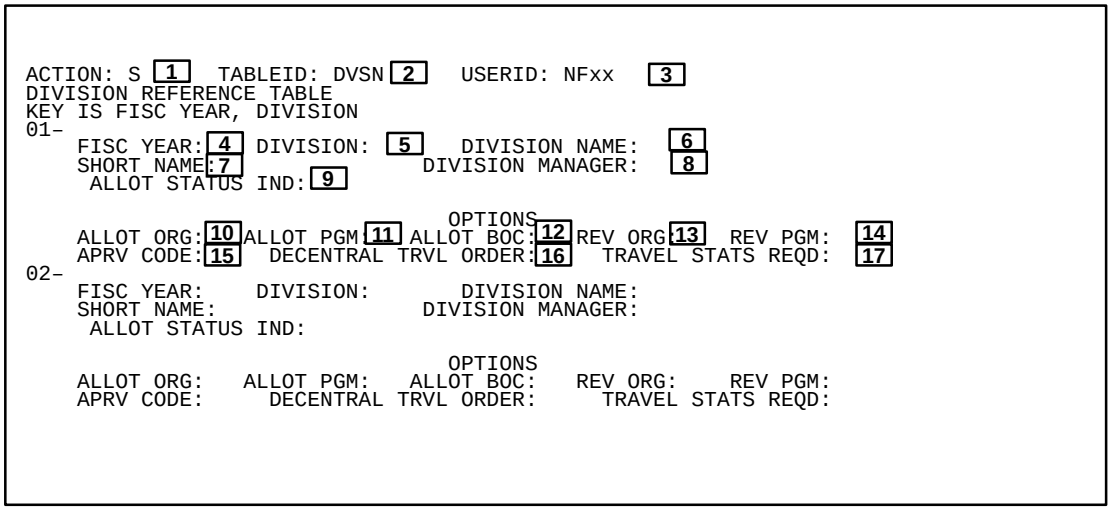

Figure 8:29. Division Reference Table (DVSN)

14 **Rev Pgm** *(conditional, alpha field; 1 position)*. If this division maintains revenue budgets by program, key in ***Y***. If this division does not maintain revenue budgets by program, key in ***N***. If left blank, the system defaults to ***N***.

15 **Aprv Code** *(conditional, alpha field; 1 position)*. If this division has its own approval requirements which overrides the default approval requirements established for each document type, key in ***Y***. If this indicator is **Y**, the actual approval requirements for the division are established in the APRV. If left blank, the system defaults to ***N***.

16 **Decentral Trvl Order** *(conditional, alpha field; 1 position)*. If this division is decentralized for travel order processing, key in ***Y***. If this division is not decentralized for travel order processing, key in ***N***. If left blank, the system defaults to ***N***.

17 **Travel Stats Reqd** *(conditional, alpha field; 1 position)*. If this division is required on travel vouchers for this division, key in ***Y***. If this division is not required on travel vouchers for this division, key in ***N***. If left blank, the system defaults to ***N***.

After keying in the data, press [Enter]. All records (lines) that are error-free or tagged with warning messages are added; records that contain either overrideable or fatal errors are not added. The message *All Lines Added* is displayed at the bottom of the screen to indicate that all or some records have been added; if any records contain errors, error messages are also displayed. For more information about error messages and correcting errors, see **Part 2, System Edits**.

- To add another record, repeat the above process.

Performing Other Actions. For instructions on displaying, changing, and deleting a record, or performing any other action, see **Part 2, Using Tables**.

Fund Category Reference Table (FCAT)

The FCAT is used to define fund category codes and their attributes. Funds can be grouped into fund categories.

To access the FCAT, at the FFS screen, key in ***N*** at the Action field and ***FCAT*** at the TableID field, then press [Enter]. The FCAT screen (**Figure 8:30**) is displayed with an ***S*** in the Action field.

Instructions for adding are discussed below.

Note: If you are not authorized to perform a specific processing action (adding, changing, or deleting a record) in this table, contact your Functional Administrator responsible for Table Maintenance.

Adding A Record. At the FCAT screen, complete the fields as follows:

[1] **Action** *(required, alpha field; 1 position)*. Key in ***A***.

[2] **TableID** (*no-entry*). Displays ***FCAT***.

[3] **UserID** (*no-entry*). Displays the user ID.

[4] **BFY** 🔑 *(required, numeric field; 2 positions)*. Key in the last 2 digits of the budget fiscal year.

[5] **Fund Cat** 🔑 *(required, numeric field; 1 position)*. Key in the code used to define the fund category.

[6] **Fund Cat Name** *(optional, alphanumeric field; max. of 30 positions)*. Key in the fund category name used for reporting purposes.

[7] **Short Name** *(optional, alphanumeric field; max. of 12 positions)*. Key in the name to appear on reports when there is not enough room for the full fund category name.

[8] **Fund Cat Post Flag** *(optional default, alpha field; 1 position)*. Key in ***Y*** if the fund category stored on the FUND is used when accessing the ACED for posting to the General Ledger. The Fund Category Post flag in the ACEV must also be ***Y*** for the accounting event defined in the ACEN. If left blank, the system defaults to ***N***.

After keying in the data, press [Enter]. All records (lines) that are error-free or tagged with warning messages are added; records that contain either overrideable or fatal errors are not added. The message *All Lines Added* is displayed at the bottom of the screen to indicate that all or some records have been added; if any records contain errors, error messages are also displayed. For more information about error messages and correcting errors, see **Part 2, System Edits**.

- To add another record, repeat the above process.

Performing Other Actions. For instructions on displaying, changing, and deleting a record, or performing any other action, see **Part 2, Using Tables**.

```
ACTION: S [1]   TABLEID: FCAT [2]   USERID: NFxx   [3]
FUND CATEGORY REFERENCE TABLE
KEY IS BFY, FUND CAT

                                                          FUND CAT
     BFY FUND CAT          FUND CAT NAME          SHORT NAME   POST FLAG
    --- --------  ------------------------------  ------------  ---------
01-  [4]   [5]                [6]                    [7]          [8]
02-
03-
04-
05-
06-
07-
08-
09-
10-
11-
12-
13-
14-
```

Figure 8:30. Fund Category Reference Table (FCAT)

Fund Class Reference Table (FCLS)

The FCLS is used to define fund class codes. Funds can be grouped into classes in the FUND.

To access the FCLS, at the FFS screen, key in ***N*** at the Action field and ***FCLS*** at the TableID field, then press [Enter]. The FCLS screen (**Figure 8:31**) is displayed with an ***S*** in the Action field.

Instructions for adding are discussed below.

Note: If you are not authorized to perform a specific processing action (adding, changing, or deleting a record) in this table, contact your Functional Administrator responsible for Table Maintenance.

Adding A Record. At the FCLS screen, complete the fields as follows:

[1] **Action** *(required, alpha field; 1 position)*. Key in ***A***.

[2] **TableID** (*no-entry*). Displays ***FCLS***.

[3] **UserID** (*no-entry*). Displays the user ID.

[4] **BFY** 🔑 *(required, numeric field; 2 positions)*. Key in the last 2 digits of the budget fiscal year.

[5] **Fund Class** 🔑 *(required, numeric field; 3 positions)*. Key in the code used to define the fund class.

[6] **Fund Class Name** *(optional, alphanumeric field; max. of 30 positions)*. Key in the fund class name used for reporting purposes.

[7] **Short Name** *(optional, alphanumeric field; max. of 12 positions)*. Key in the name to appear on reports when there is not enough room for the full fund class name.

After keying in the data, press [Enter]. All records (lines) that are error-free or tagged with warning messages are added; records that contain either overrideable or fatal errors are not added. The message *All Lines Added* is displayed at the bottom of the screen to indicate that all or some records have been added; if any records contain errors, error messages are also displayed. For more information about error messages and correcting errors, see **Part 2, System Edits**.

- To add another record, repeat the above process.

Performing Other Actions. For instructions on displaying, changing, and deleting a record, or performing any other action, see **Part 2, Using Tables**.

```
ACTION: S [1] TABLEID: FCLS [2] USERID: NFxx [3]
FUND CLASS REFERENCE TABLE
KEY IS BFY, FUND CLASS

     BFY  FUND CLASS         FUND CLASS NAME          SHORT NAME
    ---  ----------  ------------------------------ ------------
01- [4]     [5]                  [6]                    [7]
02-
03-
04-
05-
06-
07-
08-
09-
10-
11-
12-
13-
14-
15-
```

Figure 8:31. Fund Class Reference Table (FCLS)

Fund Group Reference Table (FGRP)

The FGRP is used to define fund group codes. Funds can be grouped in the FUND.

To access the FGRP, at the FFS screen, key in ***N*** at the Action field and ***FGRP*** at the TableID field, then press [Enter]. The FGRP screen (**Figure 8:32**) is displayed with an ***S*** in the Action field.

Instructions for adding are discussed below.

Note: If you are not authorized to perform a specific processing action (adding, changing, or deleting a record) in this table, contact your Functional Administrator responsible for Table Maintenance.

Adding A Record. At the FGRP screen, complete the fields as follows:

[1] **Action** *(required, alpha field; 1 position)*. Key in ***A***.

[2] **TableID** (*no-entry*). Displays ***FGRP***.

[3] **UserID** (*no-entry*). Displays the user ID.

[4] **BFY** 🔑 *(required, numeric field; 2 positions)*. Key in the last 2 digits of the budget fiscal year.

[5] **Fund Grp** 🔑 *(required, numeric field; 2 positions)*. Key in the code used to define the fund group.

[6] **Fund Group Name** *(optional, alphanumeric field; max. of 30 positions)*. Key in the fund group name used for reporting purposes.

[7] **Short Name** *(optional, alphanumeric field; max. of 12 positions)*. Key in the name to appear on reports when there is not enough room for the full fund group name.

After keying in the data, press [Enter]. All records (lines) that are error-free or tagged with warning messages are added; records that contain either overrideable or fatal errors are not added. The message *All Lines Added* is displayed at the bottom of the screen to indicate that all or some records have been added; if any records contain errors, error messages are also displayed. For more information about error messages and correcting errors, see **Part 2, System Edits**.

- To add another record, repeat the above process.

Performing Other Actions. For instructions on displaying, changing, and deleting a record, or performing any other action, see **Part 2, Using Tables**.

```
ACTION: S [1] TABLEID: FGRP [2] USERID: NFxx    [3]
FUND GROUP REFERENCE TABLE
KEY IS BFY, FUND GRP

     BFY  FUND GRP        FUND GROUP NAME          SHORT NAME
    ---  --------  ------------------------------  ------------
01-  [4]    [5]                [6]                    [7]
02-
03-
04-
05-
06-
07-
08-
09-
10-
11-
12-
13-
14-
15-
```

Figure 8:32. Fund Group Reference Table (FGRP)

Fund Summary Group Definition Table (FSUM)

The FSUM is used to define fund summary groups for the purpose of summarizing data across multiple BFY/Funds.

Note: Records may be added, displayed, or deleted at this table; records may not be changed.

To access the FSUM, at the FFS screen, key in ***N*** at the Action field and ***FSUM*** at the TableID field, then press [Enter]. The FSUM screen (**Figure 8:33**) is displayed with an ***S*** in the Action field.

Instructions for adding are discussed below.

Note: If you are not authorized to perform a specific processing action (adding or deleting a record) in this table, contact your Functional Administrator responsible for Table Maintenance.

Adding A Record. At the FSUM screen, complete the fields as follows:

[1] **Action.** (*required, alpha field; 1 position*). Key in ***A***.

[2] **TableID** (*no-entry*). Displays ***FSUM***.

[3] **UserID** (*no-entry*). Displays the user ID.

[4] **Fund Summary Group** (*required, alphanumeric field; max. of 15 positions*). Key in the fund summary group.

[5] **BFYs** (*required, numeric field; 2 positions*). Key in the budget fiscal year for which the fund summary group is being established.

[6] **Fund** (*required, alphanumeric field; max. of 3 positions*). Key in the fund for which the fund summary group is being established.

[7] **Fund Name** (*no-entry*). Displays the fund name associated with the fund from the FUND.

After keying in the data, press [Enter]. All records (lines) that are error-free or tagged with warning messages are added; records that contain either overrideable or fatal errors are not added. The message *All Lines Added* is displayed at the bottom of the screen to indicate that all or some records have been added; if any records contain errors, error messages are also displayed. For more information about error messages and correcting errors, see **Part 2, System Edits**.

- To add another record, repeat the above process.

Performing Other Actions. For instructions on displaying and deleting a record, or performing any other action, see **Part 2, Using Tables**.

```
ACTION: S [1] TABLEID: FSUM  [2] USERID: NFxx  [3]
    FUND SUMMARY GROUP DEFINITION TABLE
    KEY IS FUND SUMMARY GROUP, BFYS, FUND

    FUND SUMMARY GROUP: [4]

       BFYS    FUND    FUND NAME
      -- --  ------   ------------------------------
01-   [5]      [6]      [7]
02-
03-
04-
05-
06-
07-
08-
09-
10-
11-
12-
```

Figure 8:33. Fund Summary Group Definition Table (FSUM)

Fund Treasury Symbol Reference Table (FSYM)

The FSYM is used to define valid fund Treasury symbols.

Note: This table is updated when entries are added or deleted from the FUND. Records can only be changed or viewed at this table; records cannot be added or deleted.

To access the FSYM, at the FFS screen, key in ***N*** at the Action field and ***FSYM*** at the TableID field, then press [Enter]. The FSYM screen (**Figure 8:34**) is displayed with ***S*** in the Action field.

Instructions for changing are discussed below.

Note: If you are not authorized to perform a specific processing action (i.e., changing a record) in this table, contact your Functional Administrator responsible for Table Maintenance.

Changing A Record. At the FSYM screen, complete the fields as follows:

[1] **Action** *(required, alpha field; 1 position)*. Key in ***C***.

[2] **TableID** (*no-entry*). Displays ***FSYM***.

[3] **UserID** (*no-entry*). Displays the user ID.

[4] **BFYs** 🔑 *(required, numeric field; 2 positions)*. Key in the budget fiscal years.

[5] **Fund** 🔑 *(required, alphanumeric field; max. of 3 positions)*. Key in the fund code.

[6] **Other Agency** *(optional, alphanumeric field; 2 positions)*. Key in the other agency code for this treasury symbol. Leave blank for those symbols that have only two digits before the year indicator.

[7] **Agency** *(optional, alphanumeric field; 2 positions)*. Key in the agency code portion of the Treasury symbol.

[8] **Year Ind** *(optional, numeric field; max. of 3 positions)*. Key in the last 3 digits of the year for the fund (i.e., 2001 is keyed in as ***001***). For **single year funds**, key in the last digit of the budget fiscal year. For **no year funds**, key in ***X***. For **multi-year funds**, key in the last digit of the beginning budget fiscal year, followed by a back slash (/) and the last digit of the ending budget fiscal year. (For example, if the beginning budget fiscal year was 2000 and the ending budget fiscal year is 2001, key in ***0/1***.) For **miscellaneous funds**, key in a letter or leave blank.

[9] **Fund Group** *(optional, alphanumeric field; 4 positions)*. Key in the fund group portion of the Treasury symbol. Use the last four digits of the symbol, or the four digits immediately following the year indicator..

[10] **Suffix** *(optional, alphanumeric field; max. of 6 positions)*. Key in a suffix, prefix, or miscellaneous information about the fund.

[11] **Fund Status** *(optional, alpha field; 1 position)*. Key in the status of the fund which is used to group like funds together on the SF-133 report, based on the report column definition in RCOL. Use one of the following codes.

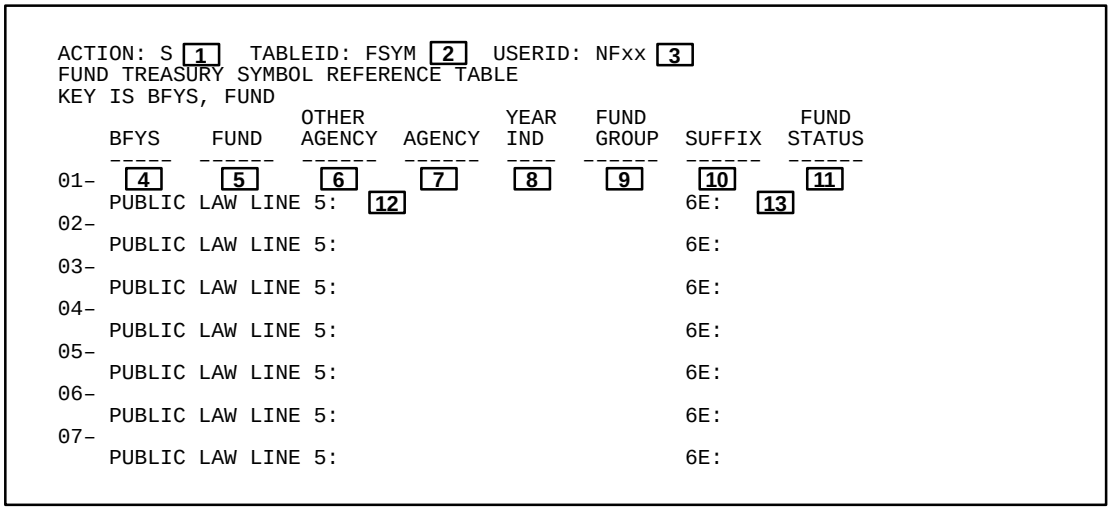

Figure 8:34. Fund Treasury Symbol Reference Table (FSYM)

C = Closed
E = Expired
N = No-year
U = Unexpired single year or must-year

12 Public Law Line 5 *(optional, alphanumeric field; max. of 25 positions)*. Key in the number of the Public Law(s) that is to appear on line 5 of the SF-133 report.

13 Public Law Line 6E *(optional, alphanumeric field; max. of 25 positions)*. Key in the number of the Public Law(s) that is to appear on line 6E of the SF-133 report.

After keying in the data, press [Enter]. All records (lines) that are error-free or tagged with warning messages are changed; records that contain either overrideable or fatal errors are not changed. The message *All Lines Changed* is displayed at the bottom of the screen to indicate that all or some records have been changed; if any records contain errors, error messages are also displayed. For more information about error messages and correcting errors, see **Part 2, System Edits**.

- To change another record, repeat the above process.

Performing Other Actions. For instructions on displaying a record or performing any other action, see **Part 2, Using Tables**.

Fiscal Year Reference Table (FSYR)

The FSYR is used to define the accounting and budget fiscal years used in the system.

To access the FSYR, at the FFS screen, key in ***N*** at the Action field and ***FSYR*** at the TableID field, then press [Enter]. The FSYR screen (**Figure 8:35**) is displayed with an ***S*** in the Action field.

Instructions for adding are discussed below.

Note: If you are not authorized to perform a specific processing action (adding, changing, or deleting a record) in this table, contact your Functional Administrator responsible for Table Maintenance.

Adding A Record. At the FSYR screen, complete the fields as follows:

[1] **Action** *(required, alpha field; 1 position)*. Key in ***A***.

[2] **TableID** (*no-entry*). Displays ***FSYR***.

[3] **UserID** (*no-entry*). Displays the user ID.

[4] **FY** 🔑 *(required, numeric field; 2 positions)*. Key in the last 2 digits of the fiscal year.

[5] **Name** *(optional, numeric field; 4 positions)*. Key in the fiscal year (i.e., ***2001***).

[6] **Yr/End** *(optional, alphanumeric field; 6 positions)*. Key in the last calendar date of the fiscal year using the *yymmdd* format (i.e., ***010930***).

[7] **No. Prds** *(optional, numeric field; 2 positions)*. Key in a number from ***01*** to ***99*** indicating the number of accounting periods in the fiscal year.

[8] **Clos** *(optional default, alpha field; 1 position)*. Key in ***Y*** to close. The FFIS annual closing process changes this field to ***Y*** when the year is closed. No document can be entered for closed years. If need be, this field can be changed. If left blank, the system defaults to ***N***.

[9] **Bud Ind** *(optional default, alpha field; 1 position)*. Key in ***Y*** when the original budget is officially approved for this fiscal year. Otherwise, leave blank. Once the indicator is set to **Y**, all subsequent budget documents affect only the current modified amount and does not change the original budget amounts. If left blank, the system defaults to ***N***.

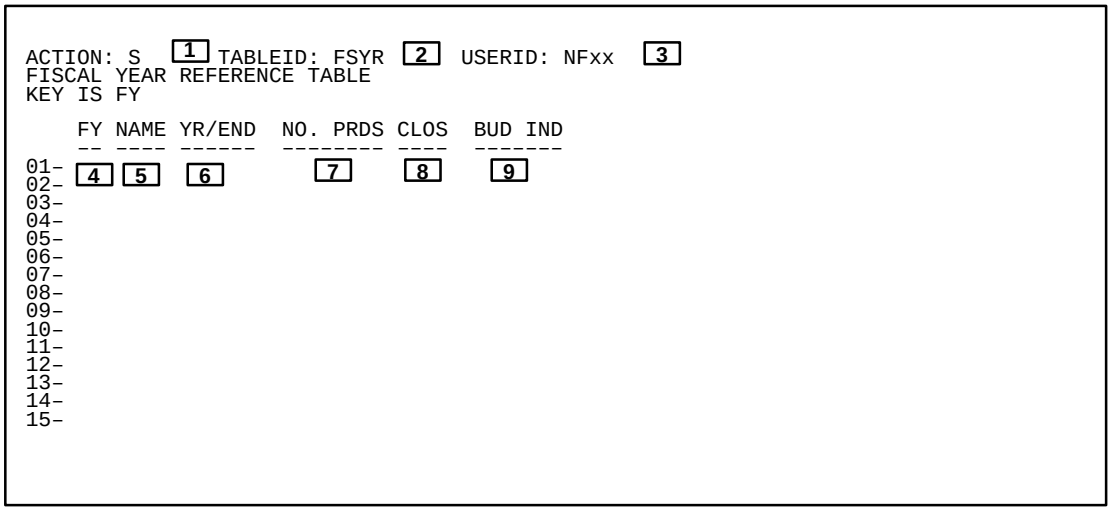

Figure 8:35. Fiscal Year Reference Table (FSYR)

After keying in the data, press [Enter]. All records (lines) that are error-free or tagged with warning messages are added; records that contain either overrideable or fatal errors are not added. The message *All Lines Added* is displayed at the bottom of the screen to indicate that all or some records have been added; if any records contain errors, error messages are also displayed. For more information about error messages and correcting errors, see **Part 2, System Edits**.

- To add another record, repeat the above process.

Performing Other Actions. For instructions on displaying, changing, and deleting a record, or performing any other action, see **Part 2, Using Tables**.

File Transmission Verification Table (FTVT)

The FTVT is used to define fund types that can be used to group similar funds for classification/sorting purposes on reports.

To access the FTVT, at the FFS screen, key in ***N*** at the Action field and ***FTVT*** at the TableID field, then press [Enter]. The FTVT screen (**Figure 8:36**) is displayed with an ***S*** in the Action field.

Instructions for adding are discussed below.

Note: If you are not authorized to perform a specific processing action (adding, changing, or deleting a record) in this table, contact your Functional Administrator responsible for Table Maintenance.

Adding A Record. At the FTVT screen, complete the fields as follows:

[1] **Action** *(required, alpha field; 1 position)*. Key in ***A***.

[2] **TableID** (*no-entry*). Displays ***FTVT***.

[3] **UserID** (*no-entry*). Displays the user ID.

[4] **System ID** 🔑 *(required, numeric field; 4 positions)*. Key in the system ID.

[5] **Date Created** 🔑 *(required, numeric field; 6 positions)*. Key in the date created.

[6] **Time Created** 🔑 *(required, numeric field; 6 positions)*. Key in the time created.

[7] **File Descr** *(required, alphanumeric field; max. of 15 positions)*. Key in the file description.

[8] **Date Received** *(required, numeric field; 6 positions)*. Key in the date received.

[9] **Time Received** *(required, numeric field; 6 positions)*. Key in the time received.

After keying in the data, press [Enter]. All records (lines) that are error-free or tagged with warning messages are added; records that contain either overrideable or fatal errors are not added. The message *All Lines Added* is displayed at the bottom of the screen to indicate that all or some records have been added; if any records contain errors, error messages are also displayed. For more information about error messages and correcting errors, see **Part 2, System Edits**.

- To add another record, repeat the above process.

Performing Other Actions. For instructions on displaying, changing, and deleting a record, or performing any other action, see **Part 2, Using Tables**.

```
ACTION: S [1]   TABLEID: FTVT [2]  USERID: NFxx [3]
FILE TRANSMISSION VERIFICATION TABLE
KEY IS SYSTEM ID, DATE CREATED, TIME CREATED

     SYSTEM    DATE      TIME       FILE         DATE       TIME
      ID     CREATED   CREATED     DESCR      RECEIVED   RECEIVED
     ---    --------  -------- ------------   ---------- ------------
01-  [4]      [5]       [6]        [7]          [8]        [9]
02-
03-
04-
05-
06-
07-
```

Figure 8:36. File Transmission Verificaiton Table (FTVT)

Fund Type Reference Table (FTYP)

The FTYP is used to define fund types that can be used to group similar funds for classification/sorting purposes on reports.

To access the FTYP, at the FFS screen, key in ***N*** at the Action field and ***FTYP*** at the TableID field, then press [Enter]. The FTYP screen (**Figure 8:37**) is displayed with an ***S*** in the Action field.

Instructions for adding are discussed below.

Note: If you are not authorized to perform a specific processing action (adding, changing, or deleting a record) in this table, contact your Functional Administrator responsible for Table Maintenance.

Adding A Record. At the FTYP screen, complete the fields as follows:

[1] **Action** *(required, alpha field; 1 position)*. Key in ***A***.

[2] **TableID** (*no-entry*). Displays ***FTYP***.

[3] **UserID** (*no-entry*). Displays the user ID.

[4] **Type** 🔑 *(required, alphanumeric field; max. of 4 positions)*. Key in a code to identify this fund type.

[5] **Name** *(optional, alphanumeric field; max. of 30 positions)*. Key in the fund type name.

[6] **Govt/Bus** *(optional, alpha field; 1 position)*. Key in one of the following codes:

G = Governmental
B = Business

After keying in the data, press [Enter]. All records (lines) that are error-free or tagged with warning messages are added; records that contain either overrideable or fatal errors are not added. The message *All Lines Added* is displayed at the bottom of the screen to indicate that all or some records have been added; if any records contain errors, error messages are also displayed. For more information about error messages and correcting errors, see **Part 2, System Edits**.

- To add another record, repeat the above process.

Performing Other Actions. For instructions on displaying, changing, and deleting a record, or performing any other action, see **Part 2, Using Tables**.

```
ACTION: S [1]  TABLEID: FTYP [2]  USERID: NFxx [3]
FUND TYPE REFERENCE TABLE
KEY IS FUND TYPE

    TYPE NAME                            GOVT/BUS
    ---- ------------------------------    -
01-
02- [4]   [5]                              [6]
03-
04-
05-
06-
07-
08-
09-
10-
11-
12-
13-
14-
15-
```

Figure 8:37. Fund Type Reference Table (FTYP)

Fund Reference Table (FUND)

The FUND is used to:

- Define codes for all funds used in the system.
- Establish classification groupings that group similar funds together. Funds can be grouped into categories in the table.

To access the FUND, at the FFS screen, key in ***N*** at the Action field and ***FUND*** at the TableID field, then press [Enter]. The FUND screen (**Figure 8:38**) is displayed with an ***S*** in the Action field.

Instructions for adding are discussed below.

Note: If you are not authorized to perform a specific processing action (adding, changing, or deleting a record) in this table, contact your Functional Administrator responsible for Table Maintenance.

Adding A Record. At the FUND screen, complete the fields as follows:

[1] **Action** *(required, alpha field; 1 position)*. Key in ***A***.

[2] **TableID** (*no-entry*). Displays ***FUND***.

[3] **UserID** (*no-entry*). Displays the user ID.

[4] **BFYs** *(required, numeric field; 2 positions)*. Key in the last 2 digits of the budget fiscal years.

[5] **Fund** *(required, alphanumeric field; max. of 3 positions)*. Key in the code used to define the fund. If entering a fund split code, an asterisk (*) is entered for the first position of the fund code. Real funds do not begin with an asterisk. **Note:** If entering a fund split code and you wish to set all allocation/suballocation dimensions to *N*, set allocation and suballocation control options to *I* on the FUN2.

[6] **Fund Type** *(optional, alphanumeric field; 1 position)*. Key in a valid fund type from the FTYP for the fund being defined.

[7] **Budget Category** *(optional default, alpha field; 1 position)*. Key in the budget category (***A*** or ***B***) for this fund. Category A funds are apportioned by fiscal quarter. Category B funds are apportioned according to some other time frame (e.g., annually). If left blank, the system defaults to ***A***.

[8] **No Year Ind** *(optional default, alpha field; 1 position)*. Key in ***Y*** if this is a no year fund. Funds with beginning and ending budget fiscal years (multi-year) funds or funds that span more than one year are not no year funds. If left blank, the system defaults to ***N***.

[9] **Carryover Ind** *(optional default, alphanumeric field; 1 position)*. Key in ***Y*** if this is a no year fund and the carryover amount from the previous year is part of this year's budget. If left blank, the system defaults to ***N***.

[10] **Treasury Symbol** *(required, alphanumeric field; 15 positions)*. Key in the Treasury symbol associated with the fund.

[11] **Fund Name** *(optional, alphanumeric field; max. of 30 positions)*. Key in the fund name to be used for reporting purposes.

```
ACTION: S [1]  TABLEID: FUND  [2] USERID: NFxx  [3]
FUND REFERENCE TABLE
KEY IS BFYS, FUND

BFYS: [4]       FUND:   [5]  FUND TYPE:  [6] BUDGET CATEGORY:  [7]

NO YEAR IND:  [8]    CARRYOVER IND: [9]   TREASURY SYMBOL:  [10]
FUND NAME:    [11]                          SHORT NAME:    [12]
FUND CLASS:   [13] FUND CAT: [14]    FUND GROUP: [15] SUBCLASS ACCT IND: [16]
AGENCY:   [17]     AGENCY NAME: [18]
AGENCY LOCATION CODE: [19]  -    -        BUREAU CODE:    [20]   -
                ALLOW UNOBLIG EXPEND AGAINST EXPIRED:  [21]
                       MEMO DEPRECIATION TRANS TYPE:  [22]
                                  RPT224 COLUMN IND:  [23]

                         ***  INTEREST ACCT  ***
      ORG: [24]                  PGM:  [25]                  BOC:   [26]
   JOB NO: [27]            RPTG CATG:  [28]
                         ***  DISCOUNT ACCT  ***
      ORG: [29]                  PGM:  [30]                  BOC:   [31]
   JOB NO: [32]            RPTG CATG:  [33]
```

Figure 8:38. Fund Reference Table (FUND)

12 **Short Name** *(optional, alphanumeric field; max. of 12 positions)*. Key in the name to appear on reports when there is not enough room for the full fund name.

13 **Fund Class** *(optional, alphanumeric field; 3 positions)*. Key in the applicable fund class from the FCLS for the fund being defined.

14 **Fund Cat** *(optional, alphanumeric field; 2 positions)*. Key in the applicable fund category from the FCAT for the fund being defined.

15 **Fund Group** *(optional, alphanumeric field; 2 positions)*. Key in the applicable fund group from the FGRP for the fund being defined.

16 **Subclass Acct Ind** *(conditional, alpha field; 1 position)*. If this is a subclass account, key in ***Y***. If left blank, the system defaults to ***N***.

17 **Agency** *(required, alphanumeric field; 2 positions)*. Key in the applicable agency code.

18 **Agency Name** *(optional, alphanumeric field; max. of 30 positions)*. Key in the name of the agency associated with the agency code.

19 **Agency Location Code** *(conditional, numeric field; 8 positions)*. If the ALC indicator in the DOPT is ***F***, key in the location code applicable to the agency. Otherwise, the field is left blank.

20 **Bureau Code** *(conditional, numeric field; 8 positions)*. If the ALC indicator in the DOPT is ***F***, key in the bureau code. Otherwise, the field is left blank.

21 **Allow Unoblig Expend Against Expired** *(conditional, alpha field; 1 position)*. If you want to enter a new expenditure when the fund has expired, key in ***Y***. Key in ***N*** to cause the system to generate an overrideable error when the fund has expired and an attempt is made to enter a new expenditure against it. If left blank, the system defaults to ***N***.

22 **Memo Depreciation Trans Type** *(optional, alphanumeric field; 2 positions)*. Key in the transaction type appropriate for memo depreciation for this fund.

23 **Rpt224 Column Ind** *(required, alpha field; 1 position)*. Key in one of the following.

- ***R*** = For a receipt
- ***D*** = For disbursement
- ***N*** = If this fund is not to appear on the Statement Of Transactions, 224 Report.
- ***B*** = For both, to indicate which column(s) to post to the Statement Of Transactions, 224 Report.

24 **Org** (Interest Acct) *(conditional, alphanumeric field; 5 positions)*. If the Use FUND Int Orgn in the DOPT is ***Y***, key in a default organization code used to post interest for this fund.

25 **Pgm** (Interest Acct) *(conditional, alphanumeric field; 9 positions)*. If the Use FUND Int Pgm in the DOPT is ***Y***, key in a default program code to be used to post interest for this fund.

26 **BOC** (Interest Acct) *(conditional, alphanumeric field; 4 positions)*. If the Use FUND Int BOC in the DOPT is ***Y***, key in a default budget object code used to post interest for this fund.

27 **Job No** (Interest Acct) *(conditional, alphanumeric field; 8 positions)*. If the Use FUND Int Job No in the DOPT is ***Y***, key in a default job number used to post interest for this fund.

28 **Rptg Catg** (Interest Acct) *(conditional, alphanumeric field; 2 positions)*. If the Use FUND Int Rptg in the DOPT is ***Y***, key in a default reporting category used to post interest for this fund.

29 **Org** (Discount Acct) *(conditional, alphanumeric field; 5 positions)*. If the Use FUND Disc Org in the DOPT is ***Y***, key in a default organization code used to post discounts for this fund.

30 **Pgm** (Discount Acct) *(conditional, alphanumeric field; 9 positions)*. If the Use FUND Disc Pgm in the DOPT is ***Y***, key in a default program code used to post discounts for this fund.

31 **BOC** (Discount Acct) *(conditional, alphanumeric field; 4 positions)*. If the Use FUND Disc BOC in the DOPT is ***Y***, key in a default budget object code used to post discounts for this fund.

32 **Job No** (Discount Acct) *(conditional, alphanumeric field; 8 positions)*. If the Use FUND Disc Job No in the DOPT is ***Y***, key in a default job number used to post discounts for this fund.

33 **Rptg Catg** (Discount Acct) *(conditional, alphanumeric field; 2 positions)*. If the Use FUND Disc Rptg in the DOPT is ***Y***, key in a default reporting category used to post discounts for this fund.

After keying in the data, press [Enter]. All records (lines) that are error-free or tagged with warning

messages are added; records that contain either overrideable or fatal errors are not added. The message *All Lines Added* is displayed at the bottom of the screen to indicate that all or some records have been added; if any records contain errors, error messages are also displayed. For more information about error messages and correcting errors, see **Part 2, System Edits**.

- To add another record, repeat the above process.

Performing Other Actions. For instructions on displaying, changing, and deleting a record, or performing any other action, see **Part 2, Using Tables**.

Fund Options Reference Table (FUN2)

The FUN2 is used to:

- Define budget and spending controls for each fund.
- Define budgetary dimensions for each fund.
- Initialize the fields in the AFND and the PFND. These tables are alternate views of the FUND.
- Provide options for updating the Fiscal Year Budget tables.

To access the FUN2, at the FFS screen, key in ***N*** at the Action field and ***FUN2*** at the TableID field, then press [Enter]. The FUN2 screen (**Figure 8:39**) is displayed with an ***S*** in the Action field.

Instructions for adding are discussed below.

Note: If you are not authorized to perform a specific processing action (adding, changing, or deleting a record) in this table, contact your Functional Administrator responsible for Table Maintenance.

Adding A Record. At the FUN2 screen, complete the fields as follows:

[1] **Action** *(required, alpha field; 1 position)*. Key in ***A***.

[2] **TableID** (*no-entry*). Displays ***FUN2***.

[3] **UserID** (*no-entry*). Displays the user ID.

[4] **BFYs** (*no-entry*). Displays the beginning and ending budget fiscal years from the FUND.

[5] **Fund** (*no-entry*). Displays the fund entered in the FUND.

[6] **Appropriation (Control Options, Budget)** *(optional default, alpha field; 1 position)*. Key in a ***Y*** if the budget line is entered for this level. Key in ***N*** if the budget line is prohibited for this level. If left blank, the system defaults to ***Y***.

[7] **Appropriation (Control Options, Spending)** *(optional default, alpha field; 1 position)*. Key in one of the following:

C = Full control
P = Presence control
N = No control

If left blank, the system defaults to ***N***.

[8] **Apportionment (Control Options, Budget)** *(optional default, alpha field; 1 position)*. Key in ***Y*** if the budget line is entered for this level. Key in ***N*** if the budget line is prohibited for this level. If left blank, the system defaults to ***Y***.

[9] **Apportionment (Control Options, Spending)** *(optional default, alpha field; 1 position)*. Key in one of the following:

C = Full control
P = Presence control
N = No control

If left blank, the system defaults to ***N***.

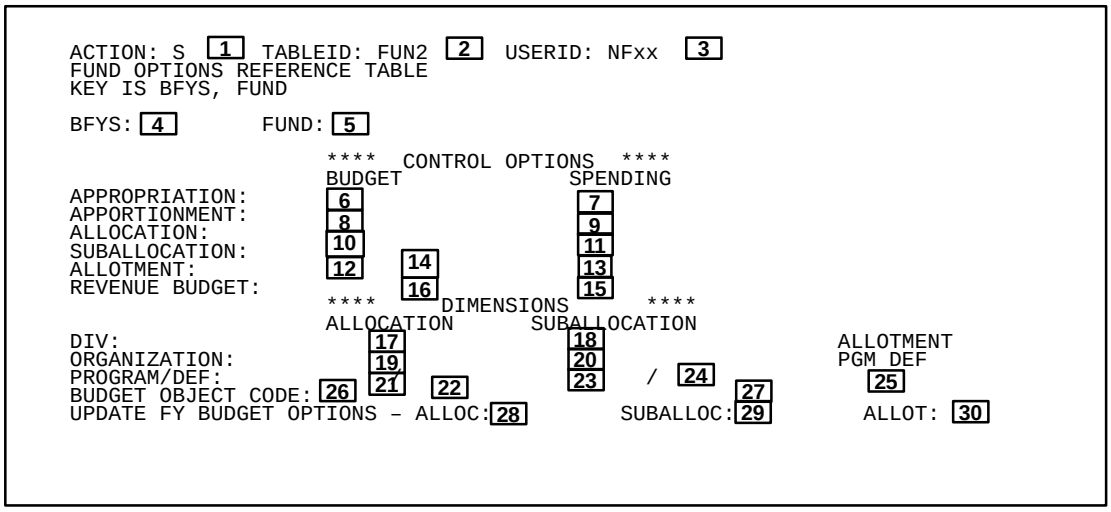

Figure 8:39. Fund Options Reference Table (FUN2)

10 Allocation (Control Options, Budget) *(optional default, alpha field; 1 position)*. Key in ***Y*** if the budget line is entered for this level. Key in ***N*** if the budget line is prohibited for this level. If left blank, the system defaults to ***Y***.

11 Allocation (Control Options, Spending) *(optional default, alpha field; 1 position)*. Key in one of the following:

C = Full control
P = Presence control
N = No control
I = Ignore

If the value is set to ***I***, the budget control flag (**Field 10**) for this level is ***N***. If left blank, the system defaults to ***N***.

12 Suballocation (Control Options, Budget) *(optional default, alpha field; 1 position)*. Key in ***Y*** if the budget line is entered for this level. Key in ***N*** if the budget line is prohibited for this level. If left blank, the system defaults to ***Y***.

13 Suballocation (Control Options, Spending) *(optional default, alpha field; 1 position)*. Key in one of the following:

C = Full control
P = Presence control
N = No control
I = Ignore

If the value is set to ***I***, the budget control flag (**Field 12**) for this level is ***N***. If left blank, the system defaults to ***N***.

14 Allotment (Control Options, Budget) *(optional default, alpha field; 1 position)*. Key in ***Y*** if the budget line is entered for this level. Key in ***N*** if the budget line is prohibited for this level. If left blank, the system defaults to ***Y***.

15 Allotment (Control Options, Spending) *(optional default, alpha field; 1 position)*. Key in one of the following:

C = Full control
P = Presence control
N = No control
I = Ignore

If the value is set to ***I***, the budget control flag (**Field 14**) for this level is ***N***. If left blank, the system defaults to ***N***.

16 Revenue Budget (Control Options, Budget) *(optional default, alpha field; 1 position)*. Key in one of the following:

P = Presence control
N = No control

If left blank, the system defaults to ***N***.

17 Div (Dimensions, Allocation) *(optional default, alpha field; 1 position)*. Key in ***Y*** if the division is used as a dimension in allocations for the fund. If left blank, the system defaults to ***N***.

18 Div (Dimensions, Suballocation) *(optional default, alpha field; 1 position)*. Key in ***Y*** if the division is used as a dimension in suballocations for the fund. If left blank, the system defaults to ***N***.

19 Organization (Dimensions, Allocation) *(optional default, alpha field; 1 position)*. Key in ***Y*** if the organization is used as a dimension in allocations for the fund. If left blank, the system defaults to ***N***.

20 Organization (Dimensions, Suballocation) *(optional default, alpha field; 1 position)*. Key in ***Y*** if the organization is used as a dimension in suballocations for the fund. If left blank, the system defaults to ***N***.

21 Program (Dimensions, Allocation) *(optional default, alpha field; 1 position)*. Key in ***Y*** if the program is used as a dimension in allocations for the fund. If left blank, the system defaults to ***N***.

22 Def (Dimensions, Allocation) *(conditional, alpha field; 4 positions)*. If the budget control option (**Field 28**) is not **N**, key in one of the following program levels at which allocations are defined.

PGMT = Program
PCLS = Program class
PCAT = Program category
PTYP = Program type
PGRP = Program group

23 Program (Dimensions, Suballocation) *(optional default, alpha field; 1 position)*. Key in ***Y*** if the program is used as a dimension in sub-allocations for the fund. If left blank, the system defaults to ***N***.

24 Def (Dimensions, Suballocation) *(conditional, alpha field; 4 positions)*. If the budget control option (**Field 29**) is not ***N***, key in one of the following program levels at which suballocations are defined.

PGMT = Program
PCLS = Program class
PCAT = Program category
PTYP = Program type
PGRP = Program group

25 Allotment Pgm Def *(conditional, alpha field; 4 positions)*. If the budget control option (**Field 30**) is

not ***N***, key in one of the following program levels at which allotments are defined.

PGMT	=	Program
PCLS	=	Program class
PCAT	=	Program category
PTYP	=	Program type
PGRP	=	Program group

If left blank, the system defaults to ***PGMT***.

26 Budget Object Code (Dimensions, Allocation) *(conditional, alpha field; 1 position)*. If the budget object code is used as a dimension in allocations for the fund, key in ***Y***. If left blank, the system defaults to ***N***.

27 Budget Object Code (Dimensions, Suballocation) *(conditional, alpha field; 1 position)*. If the budget object code is used as a dimension in suballocations for the fund, key in ***Y***. If left blank, the system defaults to ***N***.

28 Update FY Budget Options Alloc *(optional default, alpha field; 1 position)*. Key in ***Y*** to post fiscal year budget information to the FALC via the Budget Fiscal Year Update Program. If left blank, the system defaults to ***N***.

29 Update FY Budget Options Suballoc *(optional default, alpha field; 1 position)*. Key in ***Y*** to post fiscal year budget information via the Budget Fiscal Year Update Program. If left blank, the system defaults to ***N***.

30 Update FY Budget Options Allot *(optional default, alpha field; 1 position)*. Key in ***Y*** to post fiscal year budget information to the FALT via the Budget Fiscal Year Update Program. If left blank, the system defaults to ***N***.

After keying in the data, press [Enter]. All records (lines) that are error-free or tagged with warning messages are added; records that contain either overrideable or fatal errors are not added. The message *All Lines Added* is displayed at the bottom of the screen to indicate that all or some records have been added; if any records contain errors, error messages are also displayed. For more information about error messages and correcting errors, see **Part 2, System Edits**.

- To add another record, repeat the above process.

Performing Other Actions. For instructions on displaying, changing, and deleting a record, or performing any other action, see **Part 2, Using Tables**.

General Ledger Class Reference Table (GCLS)

The GCLS is used to define valid General Ledger class codes.

To access the GCLS, at the FFS screen, key in ***N*** at the Action field and ***GCLS*** at the TableID field, then press [Enter]. The GCLS screen (**Figure 8:40**) is displayed with an ***S*** in the Action field.

Instructions for adding are discussed below.

Note: If you are not authorized to perform a specific processing action (adding, changing, or deleting a record) in this table, contact your Functional Administrator responsible for Table Maintenance.

Adding A Record. At the GCLS screen, complete the fields as follows:

[1] **Action** *(required, alpha field; 1 position)*. Key in ***A***.

[2] **TableID** (*no-entry*). Displays ***GCLS***.

[3] **UserID** (*no-entry*). Displays the user ID.

[4] **Fiscal Year** 🔑 *(optional, numeric field; 2 positions)*. Key in the last 2 digits of the budget fiscal year to which this document belongs. See the FSYR for valid fiscal years.

[5] **GL Class** 🔑 *(required, numeric field; 2 positions)*. Key in the code for this General Ledger class.

[6] **GL Class Name** *(optional, alphanumeric field; max. of 30 positions)*. Key in the description you want to print in the reports.

[7] **Short Name** *(optional, alphanumeric field; max. of 12 positions)*. Key in the name that you want to appear in the reports when there is not enough room for the full name.

After keying in the data, press [Enter]. All records (lines) that are error-free or tagged with warning messages are added; records that contain either overrideable or fatal errors are not added. The message *All Lines Added* is displayed at the bottom of the screen to indicate that all or some records have been added; if any records contain errors, error messages are also displayed. For more information about error messages and correcting errors, see **Part 2, System Edits**.

- To add another record, repeat the above process.

Performing Other Actions. For instructions on displaying, changing, and deleting a record, or performing any other action, see **Part 2, Using Tables**.

```
ACTION: S [1]   TABLEID: GCLS [2]   USERID: NFxx [3]
GENERAL LEDGER CLASS REFERENCE TABLE
KEY IS FISCAL YEAR, GL CLASS

    FISCAL YEAR GL CLASS         GL CLASS NAME           SHORT NAME
    ----------- -------- ------------------------------ ------------
01-     [4]        [5]              [6]                     [7]
02-
03-
04-
05-
06-
07-
08-
09-
10-
11-
12-
13-
14-
15-
```

Figure 8:40. General Ledger Class Reference Table (GCLS)

General Ledger Group Reference Table (GGRP)

The GGRP is used to define valid General Ledger group codes.

To access the GGRP, at the FFS screen, key in ***N*** at the Action field and ***GGRP*** at the TableID field, then press [Enter]. The GGRP screen (**Figure 8:41**) is displayed with an ***S*** in the Action field.

Instructions for adding are discussed below.

Note: If you are not authorized to perform a specific processing action (adding, changing, or deleting a record) in this table, contact your Functional Administrator responsible for Table Maintenance.

Adding A Record. At the GGRP screen, complete the fields as follows:

[1] **Action** *(required, alpha field; 1 position)*. Key in ***A***.

[2] **TableID** (*no-entry*). Displays ***GGRP***.

[3] **UserID** (*no-entry*). Displays the user ID.

[4] **Fiscal Year** 🔑 *(optional, numeric field; 2 positions)*. Key in the last 2 digits of the budget fiscal year to which this document belongs. See the FSYR for valid fiscal years.

[5] **GL Group** 🔑 *(required, numeric field; 2 positions)*. Key in the code for this General Ledger group. See GGRP for valid general ledger group codes.

[6] **GL Group Name** *(optional, alphanumeric field; max. of 30 positions)*. Key in the General Ledger group name.

[7] **Short Name** *(optional, alphanumeric field; max. of 12 positions)*. Key in the name that you want to appear in the reports when there is not enough room for the full name.

After keying in the data, press [Enter]. All records (lines) that are error-free or tagged with warning messages are added; records that contain either overrideable or fatal errors are not added. The message *All Lines Added* is displayed at the bottom of the screen to indicate that all or some records have been added; if any records contain errors, error messages are also displayed. For more information about error messages and correcting errors, see **Part 2, System Edits**.

- To add another record, repeat the above process.

Performing Other Actions. For instructions on displaying, changing, and deleting a record, or performing any other action, see **Part 2, Using Tables**.

```
ACTION: S [1]  TABLEID: GGRP [2]  USERID: NFxx[3]
GENERAL LEDGER GROUP REFERENCE TABLE
KEY IS FISCAL YEAR, GL GROUP
       FISCAL
        YEAR   GL GROUP          GL GROUP NAME              SHORT NAME
       ------  --------  ------------------------------   ------------
01-     [4]      [5]                 [6]                      [7]
02-
03-
04-
05-
06-
07-
08-
09-
10-
11-
12-
13-
14-
15-
```

Figure 8:41. General Ledger Group Reference Table (GGRP)

Generic Interface Document Cross-Reference Table (GIDT)

The GIDT is used to provide users and the interface programs with a table that relates the transaction created in the feeder system with the FFIS document and line number.

Each interface requiring this type of cross-reference capability updates the GIDT with identifying information from the 420-character record, which is the record that is used to create financial transactions in FFIS, and the associated FFIS document and line number. The interface also uses GIDT to perform document referencing or to help identify documents that are being modified.

To access the GIDT, at the FFS screen, key in ***N*** at the Action field and ***GIDT*** at the TableID field, then press [Enter]. The GIDT screen (**Figure 8:42**) is displayed with an ***S*** in the Action field.

Instructions for adding are discussed below.

Note: If you are not authorized to perform a specific processing action (adding, changing, or deleting a record) in this table, contact your Functional Administrator responsible for Table Maintenance.

Adding A Record. At the GIDT screen, complete the fields as follows:

[1] **Action** *(required, alpha field; 1 position)*. Key in ***A***.

[2] **TableID** (*no-entry*). Displays ***GIDT***.

[3] **UserID** (*no-entry*). Displays the user ID.

[4] **Agency** *(optional, alphanumeric field; 4 positions)*. Key in the identifying code of the agency for which the record is associated. See the AGCY for a valid agency code.

[5] **Feeder System ID** *(optional, alphanumeric field; 4 positions)*. Key in the identifying code of the feeder system for which the table entry has been made. See **Appendix G** for valid codes.

[6] **Key1** *(optional, alphanumeric field; max. of 35 positions)*. Key in the first key field. See **Appendix G** for valid codes.

[7] **Key2** *(optional, alphanumeric field; max. of 35 positions)*. Key in the second key field. See **Appendix G** for valid codes.

[8] **Key3** *(optional, alphanumeric field; max. of 35 positions)*. Key in the third key field. See **Appendix G** for valid codes.

[9] **Key4** *(optional, alphanumeric field; max. of 35 positions)*. Key in the fourth key field. See **Appendix G** for valid codes.

[10] **Vendor Code** *(optional, alphanumeric field; 11 positions)*. Key in the identifying code of the vendor associated with the FFIS document. The first 10 positions are the vendor ID and the last position is the vendor address code.

[11] **FFIS Document** *(optional, alphanumeric field; 13 positions)*. Key in the FFIS transaction code and document number for document created from 420-character record.

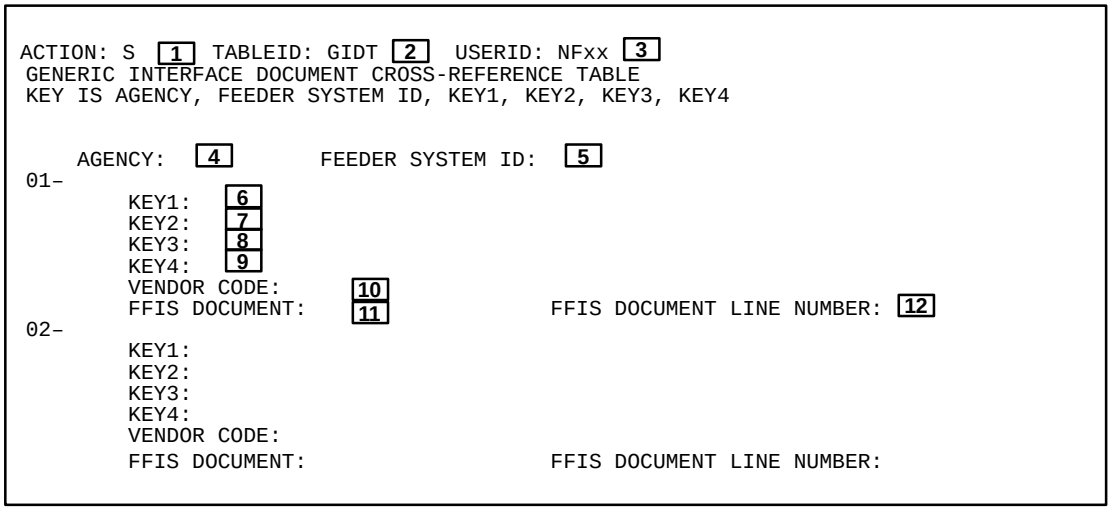

Figure 8:42. Generic Interface Document Cross-Reference Table (GIDT)

12 **FFIS Document Line Number** *(optional, numeric field; 3 positions)*. Key in the line number on the identified document that represents the accounting for the 420-character record. Each accounting line must be uniquely identified by a line number between ***000*** and ***999***.

After keying in the data, press [Enter]. All records (lines) that are error-free or tagged with warning messages are added; records that contain either overrideable or fatal errors are not added. The message *All Lines Added* is displayed at the bottom of the screen to indicate that all or some records have been added; if any records contain errors, error messages are also displayed. For more information about error messages and correcting errors, see **Part 2, System Edits**.

- To add another record, repeat the above process.

Performing Other Actions. For instructions on displaying, changing, and deleting a record, or performing any other action, see **Part 2, Using Tables**.

General Ledger Account Reference Table (GLAC)

The GLAC is used to:

- Define General Ledger account codes for each asset, liability, equity, revenue, or budgetary (obligation, expense, etc.) account in your financial system.
- Establish higher level classifications of the account codes (class, category, and group), and associate a General Ledger account with an account type.

To access the GLAC, at the FFS screen, key in ***N*** at the Action field and ***GLAC*** at the TableID field, then press [Enter]. The GLAC screen (**Figure 8:43**) is displayed with an ***S*** in the Action field.

Instructions for adding are discussed below.

Note: If you are not authorized to perform a specific processing action (adding, changing, or deleting a record) in this table, contact your Functional Administrator responsible for Table Maintenance.

Adding A Record. At the GLAC screen, complete the fields as follows:

[1] **Action** *(required, alpha field; 1 position)*. Key in ***A***.

[2] **TableID** (*no-entry*). Displays ***GLAC***.

[3] **UserID** (*no-entry*). Displays the user ID.

[4] **Fiscal Year** 🔑 *(optional, numeric field; 2 positions)*. Key in the last 2 digits of the budget fiscal year to which this document belongs. See the FSYR for valid fiscal years.

[5] **Account** 🔑 *(conditional, numeric field; 4 positions)*. If the document is a journal voucher, key in the GL account appropriate for this line. Otherwise, leave blank.

[6] **Class** *(conditional, numeric field; 3 positions)*. If reporting by General Ledger Class, key in the code from the GCLS that best describes the account defined in this line. Otherwise, optional.

[7] **Category** *(conditional, numeric field; 2 positions)*. If reporting by General Ledger Category, key in the code from the GCAT that best describes the account defined in this line. Otherwise, optional.

[8] **Group** *(conditional, numeric field; 2 positions)*. If reporting by General Ledger Group, key in the code from the GGRP that best describes the account defined in this line. Otherwise, optional.

[9] **Acct Type** *(required, numeric field; 2 positions)*. Key in the account type code appropriate for the type of account being defined in this line. See the ACCT for valid account type codes.

[10] **Cash Acct Ind** *(optional, alpha field; 1 position)*. Key in ***Y*** if this is a cash account.

[11] **Rept Cat Opt** *(optional, alpha field; 1 position)*. Key in ***Y*** if you want the reporting category code required in transactions whenever this General Ledger account is entered.

[12] **General Memo Or Both Ind** *(optional, alpha field; 1 position)*. Key in one of the following to indicate the type of journals which this General Ledger account posting is valid:

```
ACTION: S [1]  TABLEID: GLAC [2]  USERID: NFxx  [3]
GENERAL LEDGER ACCOUNT REFERENCE TABLE
KEY IS FISCAL YEAR, ACCOUNT
                                                CASH  REPT PROHIBIT  GENERAL
    FISCAL                                  ACCT ACCT  CAT  ON INPUT  MEMO OR
     YEAR  ACCOUNT CLASS CATEGORY GROUP TYPE IND   OPT    FLAG    BOTH IND
    ------ ------- ----- -------- ----- ---- ---- ----- --------  --------
01-  [4]     [5]    [6]    [7]    [8]   [9]  [10] [11]     [12]      [13]
    GL ACCOUNT NAME:    [14]                          SHORT NAME:  [15]
02-
    GL ACCOUNT NAME:                                  SHORT NAME:
03-
    GL ACCOUNT NAME:                                  SHORT NAME:
04-
    GL ACCOUNT NAME:                                  SHORT NAME:
05-
    GL ACCOUNT NAME:                                  SHORT NAME:
06-
    GL ACCOUNT NAME:                                  SHORT NAME:
07-
    GL ACCOUNT NAME:                                  SHORT NAME:
```

Figure 8:43. General Ledger Account Reference Table (GLAC)

13 **Prohibit On Input Flag** *(optional, alpha field; 1 position).* Key in ***Y*** if you want to restrict the input of the General Ledger account in JV transactions.

G = General Journal
M = Memo Journal
B = Both General and Memo Journals

14 **GL Account Name** *(optional, alphanumeric field; max. of 30 positions).* Key in the long name of the General Ledger account.

15 **Short Name** *(optional, alphanumeric; max. of 12 positions).* Key in the short name of the General Ledger account.

After keying in the data, press [Enter]. All records (lines) that are error-free or tagged with warning messages are added; records that contain either overrideable or fatal errors are not added. The message *All Lines Added* is displayed at the bottom of the screen to indicate that all or some records have been added; if any records contain errors, error messages are also displayed. For more information about error messages and correcting errors, see **Part 2, System Edits**.

- To add another record, repeat the above process.

Performing Other Actions. For instructions on displaying, changing, and deleting a record, or performing any other action, see **Part 2, Using Tables**.

Effective Transaction Type Definition Reference Table (GLTT)

The GLTT is used to define the effective transaction types used when accounting documents require inferred transaction types.

To access the GLTT, at the FFS screen, key in ***N*** at the Action field and ***GLTT*** at the TableID field, then press [Enter]. The GLTT screen (**Figure 8:44**) is displayed with an ***S*** in the Action field.

Instructions for adding are discussed below.

Note: If you are not authorized to perform a specific processing action (adding, changing, or deleting a record) in this table, contact your Functional Administrator responsible for Table Maintenance.

Adding A Record. At the GLTT screen, complete the fields as follows:

[1] **Action** *(required, alpha field; 1 position)*. Key in ***A***.

[2] **TableID** (*no-entry*). Displays ***GLTT***.

[3] **UserID** (*no-entry*). Displays the user ID.

[4] **Fiscal Year** 🔑 *(required, numeric field; 2 positions)*. Key in the last 2 digits of the accounting year.

[5] **Reference Trans Code** 🔑 *(required, alphanumeric field; 2 positions)*. Key in the transaction code that represents the document or process that is referenced by this activity.

[6] **Reference Accounting Trans Type** 🔑 *(required, alphanumeric field; 2 positions)*. Key in the transaction type that represents the accounting event associated with the reference transaction code.

[7] **Process Activity** 🔑 *(required, alphanumeric field; 2 positions)*. Key in one of the following codes to identify the activity:

A1	=	SV with revenue source code
A2	=	SV with budget object code
A3	=	SV with revenue source code against reimbursable agreement
A4	=	SV with budget object code against reimbursable agreement
A5	=	SV for balance sheet transfer against reimbursable agreement
AD	=	Treasury reconciliation
AG	=	SV as a balance sheet transfer
B1	=	IV with a revenue source code
B2	=	BD with revenue source code
B3	=	Cash receipt document with revenue source code
B4	=	IV with budget object code
B5	=	BD with budget object code

```
ACTION: S   [1] TABLEID: GLTT  [2]  USERID: NFxx [3]
EFFECTIVE TRANSACTION TYPE DEFINITION REFERENCE TABLE
KEY IS FISCAL YEAR, REF TRANS CODE, REF ACCOUNTING TRANS TYPE, PROCESS ACTIVITY

              ----REFERENCE----
     FISCAL   TRANS   ACCOUNTING     PROCESS       EFFECTIVE
      YEAR    CODE    TRANS TYPE     ACTIVITY      TRANS TYPE
     ------   -----   ----------   -------------   -------------
01-   [4]     [5]        [6]           [7]           [8]
02-
03-
04-
05-
06-
07-
08-
09-
10-
11-
12-
13-
```

Figure 8:44. Effective Transaction Type Definition Reference Table (GLTT)

B6 = Cash receipt document with budget object code
B7 = BD for balance sheet transfer against a reimbursable agreement
B8 = BD with revenue source code against a reimbursable agreement
B9 = Cash receipt document for balance sheet transfer against a reimbursable agreement
BA = IV with budget object code against a reimbursable agreement
BB = BD with budget object code against a reimbursable agreement
BC = Cash receipt document with budget object code against a reimbursable agreement
BD = IV with revenue source code against a reimbursable agreement
BE = BD for balance sheet transfer against a reimbursable agreement
BF = Cash receipt document with revenue source code against a reimbursable agreement
BG = IV as a balance sheet transfer
BH = BD as a balance sheet transfer
CP = Check printing
CX = Check cancellation
DN = Downward spending adjustments to expired appropriations
ID = Interest and discounts
IX = Cancellation Of Interest And Discounts
MC = Manual check
PY = Prior year recoveries
RC = Receivers, cost allocation and project cost accounting systems
TB = Transfer expenditure burden
R = Delay in paying Office Receipt of Receiving Report
TO = Transfer obligation burden
UP = Upward spending adjustments to expired appropriations
VS = Schedule posting
WD = Prior year recovery withdrawals
WO = Accounts receivable write of posting
XR = Cancellation reconciliation

8 **Effective Trans Type** *(required, alphanumeric field; 2 positions)*. Key in the appropriate transaction type for the result activity. This field is used to post to the General Ledger.

After keying in the data, press [Enter]. All records (lines) that are error-free or tagged with warning messages are added; records that contain either overrideable or fatal errors are not added. The message *All Lines Added* is displayed at the bottom of the screen to indicate that all or some records have been added; if any records contain errors, error messages are also displayed. For more information about error messages and correcting errors, see **Part 2, System Edits**.

- To add another record, repeat the above process.

Performing Other Actions. For instructions on displaying, changing, and deleting a record, or performing any other action, see **Part 2, Using Tables**.

General Ledger Interactive Description System Code Crosswalk Table (GLXT)

The GLXT is used to provide each interface with general ledger posting information in the form of a FFIS Transaction Code/Transaction Type combination. This allows the interfaces to accurately record the financial impact of each feeder system transaction in FFIS.

The 5-digit GLID Code on each feeder system generated 420-character record is converted to a FFIS Transaction Code/Transaction Type combination. The GLXT associates a fiscal year and GLID Code with a FFIS transaction code/transaction type combination.

To access the GLXT, at the FFS screen, key in ***N*** at the Action field and ***GLXT*** at the TableID field, then press [Enter]. The GLXT screen (**Figure 8:45**) is displayed with an ***S*** in the Action field.

Instructions for adding are discussed below.

Note: If you are not authorized to perform a specific processing action (adding, changing, or deleting a record) in this table, contact your Functional Administrator responsible for Table Maintenance.

Adding A Record. At the GLXT screen, complete the fields as follows:

[1] **Action** *(required, alpha field; 1 position)*. Key in ***A***.

[2] **TableID** (*no-entry*). Displays ***GLXT***.

[3] **UserID** (*no-entry*). Displays the user ID.

[4] **FY** (*required, numeric field; 2 positions*). Key in the fiscal year. See the FSYR for a valid fiscal year codes.

[5] **GLID Code** (*required, numeric field; 5 positions*). Key in the GLID Code. The GLID Code determines the general ledger accounts to be updated by an accounting transaction (i.e., 420-character CAS record).

[6] **Trans Code** (*required, alphanumeric field; max. of 35 positions*). Key in the transaction code. The Trans Code describes to FFIS the type of document which is being processed. **Note:** At least one entry must exist on the ACED for Trans Code/Trans Type combination.

[7] **Trans Cat** (*no-entry*). Displays the FFIS transaction category which is derived from TCAT based on the Trans Code.

[8] **Trans Type** (*required, alphanumeric field; max. of 35 positions*). Key in the transaction type. The Trans Type specifies to FFIS the posting model which is being recorded. **Note:** At least one entry must exist on the ACED for Trans Code/Trans Type combination.

[9] **Exp/Rev/GL/Bud Ind** (*required, alpha field; 1 position*). Key in one of the following indicators:

- ***E*** = Expense
- ***R*** = Revenue
- ***G*** = General Ledger
- ***B*** = Budget

```
ACTION: S [1] TABLEID: GLXT [2] USERID: NFxx    [3]
GENERAL LEDGER INTERACTIVE DESCRIPTION SYSTEM CODE CROSSWALK TABLE
KEY IS FY, GLID CODE

    FY   GLID CODE   TRANS CODE   TRANS CAT   TRANS TYPE   EXP/REV/GL/BUD IND
    --   ---------   ----------   ---------   ----------   ------------------
01- [4]     [5]         [6]         [7]         [8]            [9]
02-
03-
04-
05-
06-
07-
08-
09-
10-
11-
12-
13-
14-
15-
```

Figure 8:45. General Ledger Interactive Description System Code Crosswalk Table (GLXT)

After keying in the data, press [Enter]. All records (lines) that are error-free or tagged with warning messages are added; records that contain either overrideable or fatal errors are not added. The message *All Lines Added* is displayed at the bottom of the screen to indicate that all or some records have been added; if any records contain errors, error messages are also displayed. For more information about error messages and correcting errors, see **Part 2, System Edits**.

- To add another record, repeat the above process.

Performing Other Actions. For instructions on displaying, changing, and deleting a record, or performing any other action, see **Part 2, Using Tables**.

General Reporting Category Reference Table (GRPT)

The GRPT is used to define codes and associated descriptive names for general reporting category codes to be used for reporting purposes only.

To access the GRPT, at the FFS screen, key in ***N*** at the Action field and ***GRPT*** at the TableID field, then press [Enter]. The GRPT screen (**Figure 8:46**) is displayed with an ***S*** in the Action field.

Instructions for adding are discussed below.

Note: If you are not authorized to perform a specific processing action (adding, changing, or deleting a record) in this table, contact your Functional Administrator responsible for Table Maintenance.

Adding A Record. At the GRPT screen, complete the fields as follows:

[1] **Action** *(required, alpha field; 1 position)*. Key in ***A***.

[2] **TableID** (*no-entry*). Displays ***GRPT***.

[3] **UserID** (*no-entry*). Displays the user ID.

[4] **BFY** *(required, numeric field; 2 positions)*. Key in the last 2 digits of the budget fiscal year.

[5] **General Reporting Category** *(required, alphanumeric field; 8 positions)*. Key in the code used to define the general reporting category.

[6] **Name** *(optional, alphanumeric field; max. of 30 positions)*. Key in the name to appear on reports.

After keying in the data, press [Enter]. All records (lines) that are error-free or tagged with warning messages are added; records that contain either overrideable or fatal errors are not added. The message *All Lines Added* is displayed at the bottom of the screen to indicate that all or some records have been added; if any records contain errors, error messages are also displayed. For more information about error messages and correcting errors, see **Part 2, System Edits**.

- To add another record, repeat the above process.

Performing Other Actions. For instructions on displaying, changing, and deleting a record, or performing any other action, see **Part 2, Using Tables**.

```
ACTION: S [1]  TABLEID: GRPT [2]  USERID: NFxx [3]
GENERAL REPORTING CATEGORY REFERENCE TABLE
KEY IS BFY, GENERAL REPORTING CATEGORY

                  GENERAL
     BFY     REPORTING CATEGORY                NAME
    ------   ------------------   ------------------------------
01-  [4]            [5]                         [6]
02-
03-
04-
05-
06-
07-
08-
09-
10-
11-
12-
13-
14-
```

Figure 8:46. General Reporting Category Reference Table (GRPT)

Guest Treasury Symbol Reference Table (GTSM)

The GTSM is used to validate the interagency symbol entered on the SV or the DD.

To access the GTSM, at the FFS screen, key in ***N*** at the Action field and ***GTSM*** at the TableID field, then press [Enter]. The GTSM screen (**Figure 8:47**) is displayed with an ***S*** in the Action field.

Instructions for adding are discussed below.

Note: If you are not authorized to perform a specific processing action (adding, changing, or deleting a record) in this table, contact your Functional Administrator responsible for Table Maintenance.

Adding A Record. At the GTSM screen, complete the fields as follows:

[1] **Action** *(required, alpha field; 1 position)*. Key in ***A***.

[2] **TableID** (*no-entry*). Displays ***GTSM***.

[3] **UserID** (*no-entry*). Displays the user ID.

[4] **Treasury Symbol** 🔑 *(required, alphanumeric field; 15 positions)*. Key in the Treasury symbol used to define the guest Treasury symbol.

[5] **SF-224 Flag** *(required, alpha field; 1 position)*. Key in one of the following to indicate which column(s) to post to the Statement Of Transactions, 224 Report.

- ***R*** = For a receipt.
- ***D*** = For disbursement.
- ***B*** = For both.
- ***N*** = If this fund is not to appear on the Statement Of Transactions, 224 Report.

[6] **FACTS Dept ID** *(conditional, numeric field; 2 positions)*. If the vendor type category (**Field 5** on the VTYP) is ***G***, key in the department ID. This field is used to support intra-governmental vendors.

[7] **FACTS Bureau ID** *(conditional, numeric field; 2 positions)*. If the vendor type category (**Field 5** on the VTYP) is ***G***, key in the bureau ID. This field is used to support intra-governmental vendors.

After keying in the data, press [Enter]. All records (lines) that are error-free or tagged with warning messages are added; records that contain either overrideable or fatal errors are not added. The message *All Lines Added* is displayed at the bottom of the screen to indicate that all or some records have been added; if any records contain errors, error messages are also displayed. For more information about error messages and correcting errors, see **Part 2, System Edits**.

- To add another record, repeat the above process.

Performing Other Actions. For instructions on displaying, changing, and deleting a record, or performing any other action, see **Part 2, Using Tables**.

```
ACTION: S [1] TABLEID: GTSM [2] USERID: NFxx [3]
GUEST TREASURY SYMBOL REFERENCE TABLE
KEY IS TREASURY SYMBOL

       TREASURY          SF-224         FACTS          FACTS
        SYMBOL            FLAG        DEPT ID        BUREAU ID
    ---------------     -------       --------       ----------
01-     [4]             [5]           [6]            [7]
02-
03-
04-
05-
06-
07-
08-
09-
10-
11-
12-
13-
14-
```

Figure 8:47. Guest Treasury Symbol Reference Table (GTSM)

Interest Reason Code Reference Table (IRCT)

The IRCT is used to define a unique code and description for each reason that interest was paid on a given disbursement.

To access the IRCT, at the FFS screen, key in ***N*** at the Action field and ***IRCT*** at the TableID field, then press [Enter]. The IRCT screen (**Figure 8:48**) is displayed with an ***S*** in the Action field.

Instructions for adding are discussed below.

Note: If you are not authorized to perform a specific processing action (adding, changing, or deleting a record) in this table, contact your Functional Administrator responsible for Table Maintenance.

Adding A Record. At the IRCT screen, complete the fields as follows:

1 **Action** *(required, alpha field; 1 position)*. Key in ***A***.

2 **TableID** (*no-entry*). Displays ***IRCT***.

3 **UserID** (*no-entry*). Displays the user ID.

4 **Interest Reason Code** ➧ *(required, alphanumeric field; 1 position)*. Key in the code to correspond to the reason description (**Field 5**).

5 **Description** *(optional, alphanumeric field; max. of 30 positions)*. Key in a description for the reason that interest was paid on a disbursement.

6 **Late Payment Reason Code** *(required, alpha field; 1 position)*. Key in one of the following reason codes for the late payment. The reason is reported on the Prompt Pay Report.

- ***R*** = Delay in paying Office Receipt of Receiving Report.
- ***I*** = Delay in paying Office Receipt of Proper invoice.
- ***O*** = Delay in paying Office Receipt of PO or Contract.
- ***D*** = Delay/error by paying Office in taking discount.
- ***N*** = Delay/error by paying Office in Defective Invoice.
- ***S*** = Delay/error by paying Office in System Processing.

After keying in the data, press [Enter]. All records (lines) that are error-free or tagged with warning messages are added; records that contain either overrideable or fatal errors are not added. The message *All Lines Added* is displayed at the bottom of the screen to indicate that all or some records have been added; if any records contain errors, error messages are also displayed. For more information about error messages and correcting errors, see **Part 2, System Edits**.

- To add another record, repeat the above process.

Performing Other Actions. For instructions on displaying, changing, and deleting a record, or performing any other action, see **Part 2, Using Tables**.

```
ACTION: S [1]   TABLEID: IRCT [2]   USERID: NFxx [3]
INTEREST REASON CODE REFERENCE TABLE
KEY IS INTEREST REASON CODE

     INTEREST                                    LATE PAYMENT
    REASON CODE          DESCRIPTION             REASON CODE
    -----------  ------------------------------  ------------
01-     [4]                 [5]                      [6]
02-
03-
04-
05-
06-
07-
08-
09-
10-
11-
12-
13-
14-
```

Figure 8:48. Interest Reason Code Reference Table (IRCT)

Limits Reference Table (LIMT)

The LIMT is used to:

- Establish the ceiling or floor amount, the amount of funds budgeted against the ceiling or floor, and the available amount of ceiling or floor remaining.
- Establish ceilings and floors for Full Time Equivalents (FTEs) and dollars.

To access the LIMT, at the FFS screen, key in ***N*** at the Action field and ***LIMT*** at the TableID field, then press [Enter]. The LIMT screen (**Figure 8:49**) is displayed with an ***S*** in the Action field.

Instructions for adding are discussed below.

Note: If you are not authorized to perform a specific processing action (adding, changing, or deleting a record) in this table, contact your Functional Administrator responsible for Table Maintenance.

Adding A Record. At the LIMT screen, complete the fields as follows:

[1] **Action** (*required, alpha field; 1 position*). Key in ***A***.

[2] **TableID** (*no-entry*). Displays ***LIMT***.

[3] **UserID** (*no-entry*). Displays the user ID.

[4] **Budget Fiscal Years** (*required, numeric field; 2 positions*). Key in the last 2 digits of the budget fiscal year to which this line applies. See the FSYR for valid budget fiscal years.

[5] **Fund** (*required, alphanumeric field; max. of 3 positions*). Key in the fund to which the limit applies. See the FUND for valid fund codes for the given budget fiscal year.

[6] **Ref Lmt** (*required, numeric field; 2 positions*). Key in the reference limit number from the LMDT. The reference limit number identifies which limit dimensions definition is being used from the LMDT.

[7] **Div** (*conditional, numeric field; 2 positions*). If a division is specified in the LMDT as a dimension for this line's referenced limit, key in a division for this limit. See the DVSN for valid division codes. If a division is not specified on the LMDT, leave blank.

[8] **Org** (*conditional, numeric field; 5 positions*). If an organization is specified in the LMDT as a dimension for this line's reference limit, key in the organization for this limit. See the ORGN for valid organization codes. If an organization is not specified in the LMDT, leave blank.

[9] **Program** (*conditional, numeric field; max. of 9 positions*). If the program was specified in the LMDT as a dimension for this line's referenced limit, key in the program for which this limit exists. See the PGMT for valid program codes. If a program is not specified in the LMDT, leave blank.

[10] **BOC Grp** (*conditional, numeric field; 2 positions*). If the budget object code group is specified as a dimension for this line's referenced limit, key in the budget object code group for which this limit exists. See the BGRP for valid budget object code groups. If the budget object code group is not specified in the LMDT, leave blank.

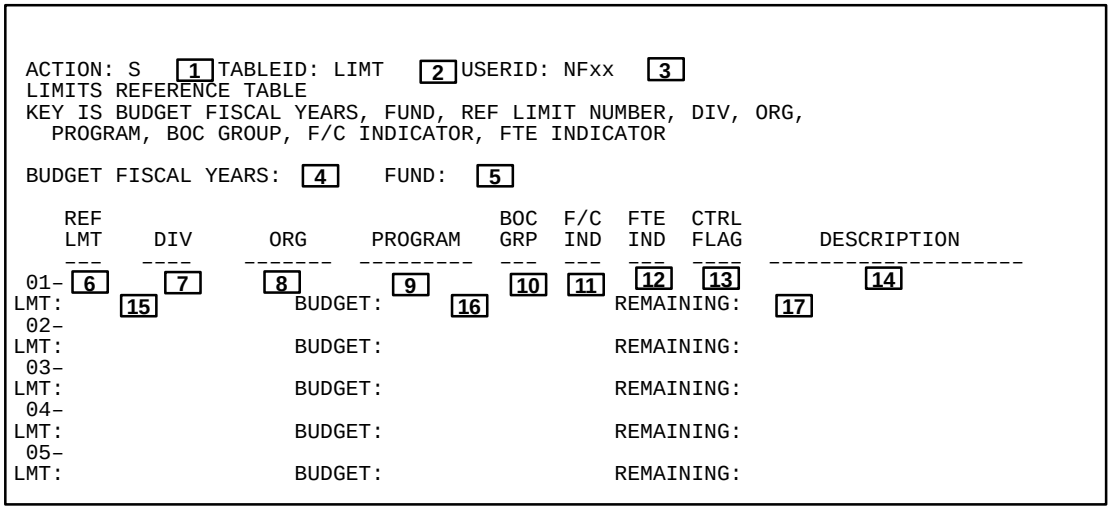

Figure 8:49. Limits Reference Table (LIMT)

11 **F/C Ind** (*required, alpha field; 1 position*). Key in the floor/ceiling indicator to determine whether the associated limit is a floor or a ceiling. Valid value are:

F = Floor
C = Ceiling

12 **FTE Ind** (*required, alpha field; 1 position*). Key in a value to indicate whether the limit is set for dollars or FTEs. Valid values are:

D = Dollars
F = FTEs

13 **Ctrl Flag** (*optional default, alpha field; 1 position*). Key in a flag to indicate the degree of control exercised over the defined limit. Valid values are:

Y = Limit violations will receive an error which requires an override from a user with sufficient authority.
N = Limit violations are accepted with warnings.

If left blank, the system defaults to ***Y***.

14 **Description** (*optional, alphanumeric field; max. of 20 positions*). Key in a description of the defined limit.

15 **Lmt** (*required, numeric field; max. of 16 positions*). Key in the limit amount (use decimal).

16 **Budget** (*no-entry*). Displays the dollar amount which has been budgeted to this particular distribution. This field is updated when appropriate, by the update limit program (BELIMIT).

17 **Remaining** (*no-entry*). Displays the dollar amount remaining. If the ceiling/floor indicator is ***C***, it equals the ceiling limit minus the budgeted amount. If the ceiling/floor indicator is ***F***, it equals the budgeted amount minus the floor amount. This is calculated online either as a budget document is processed or, when appropriate, the BELIMIT is run.

After keying in the data, press [Enter]. All records (lines) that are error-free or tagged with warning messages are added; records that contain either overrideable or fatal errors are not added. The message *All Lines Added* is displayed at the bottom of the screen to indicate that all or some records have been added; if any records contain errors, error messages are also displayed. For more information about error messages and correcting errors, see **Part 2, System Edits**.

- To add another record, repeat the above process.

Performing Other Actions. For instructions on displaying, changing, and deleting a record, or performing any other action, see **Part 2, Using Tables**.

Limit Dimensions Reference Table (LMDT)

The LMDT is used to:

- Define the dimensions for ceilings and floors.
- Allow twelve dimension combinations to be defined for each BFY or BFY/Fund combination.

To access the LMDT, at the FFS screen, key in ***N*** at the Action field and ***LMDT*** at the TableID field, then press [Enter]. The LMDT screen (**Figure 8:50**) is displayed with an ***S*** in the Action field.

Instructions for adding are discussed below.

Note: If you are not authorized to perform a specific processing action (adding, changing, or deleting a record) in this table, contact your Functional Administrator responsible for Table Maintenance.

Adding A Record. At the LMDT screen, complete the fields as follows:

[1] **Action** (*required, alpha field; 1 position*). Key in ***A***.

[2] **TableID** (*no-entry*). Displays ***LMDT***.

[3] **UserID** (*no-entry*). Displays the user ID.

[4] **Budget Fiscal Year** 🔑 (*required, numeric field; 2 positions*). Key in the last 2 digits of the budget fiscal year to which these limit dimension definitions apply. If the appropriation is left blank, only one fiscal year should be specified. See the FSYR for valid budget fiscal years.

[5] **Fund** 🔑 *(conditional, alphanumeric field; max. of 3 positions*). If the dimensions are intended to define a limit across all funds, this field should be left blank. Otherwise, key in the fund in which these limit dimension definitions apply. See the FUND for valid fund codes for the given budget fiscal year.

[6] **Limit Num** 🔑 (*required, numeric field; 2 positions*). Key in a unique number to identify this set of dimensions. This number is used in the LMDT to insure that the correct dimensions are used when looking up ceilings and floors. Since up to 12 combinations of dimensions can be defined, this field should have a value of **01** through **12**.

Note: Fields [7] through [10] are used to indicate that a particular dimension is included in the definition.

[7] **Div** (*optional default, alpha field; 1 position*). Key in ***Y*** to indicate that the division is included in the definition. If left blank, the system defaults to ***N***.

[8] **Org** (*optional default, alpha field; 1 position*). Key in ***Y*** to indicate that the organization is included in the definition. If left blank, the system defaults to ***N***.

[9] **Pgm** (*optional default, alpha field; 1 position*). Key in ***Y*** to indicate that the program is included in the definition. If left blank, the system defaults to ***N***.

[10] **BOC Group** (*optional default, alpha field; 1 position*). Key in ***Y*** to indicate that the group of budget object codes is included in the definition. If left blank, the system defaults to ***N***.

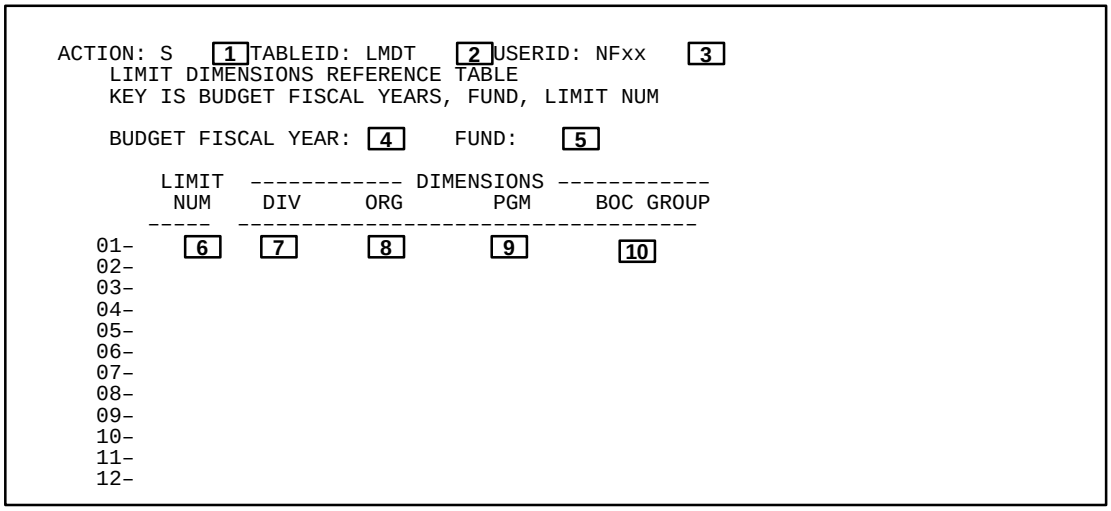

Figure 8:50. Limit Dimensions Reference Table (LMDT)

After keying in the data, press [Enter]. All records (lines) that are error-free or tagged with warning messages are added; records that contain either overrideable or fatal errors are not added. The message *All Lines Added* is displayed at the bottom of the screen to indicate that all or some records have been added; if any records contain errors, error messages are also displayed. For more information about error messages and correcting errors, see **Part 2, System Edits**.

- To add another record, repeat the above process.

Performing Other Actions. For instructions on displaying, changing, and deleting a record, or performing any other action, see **Part 2, Using Tables**.

Outstanding Billing Documents Reference Table (OBDT)

The OBDT is used to maintain a record of all outstanding billing documents.

To access the OBDT, at the FFS screen, key in ***N*** at the Action field and ***OBDT*** at the TableID field, then press [Enter]. The OBDT screen (**Figure 8:51**) is displayed with an ***S*** in the Action field.

Instructions for adding are discussed below.

Note: If you are not authorized to perform a specific processing action (adding, changing, or deleting a record) in this table, contact your Functional Administrator responsible for Table Maintenance.

Adding A Record. At the OBDT screen, complete the fields as follows:

[1] **Action** *(required, alpha field; 1 position)*. Key in ***A***.

[2] **TableID** *(no-entry)*. Displays ***OBDT***.

[3] **UserID** *(no-entry)*. Displays the user ID.

[4] **Payer ID** 🔑 *(required, alphanumeric field; 11 positions)*. Key in the vendor or provider code for this receivable.

[5] **BD ID** 🔑 *(required, alphanumeric field; 13 positions)*. Key in the transaction code and document number of the receivable.

[6] **Bill Print Date** *(no-entry)*. Displays the date the bill was printed (by FFIS or externally) or suppressed.

[7] **Bill Print Ind** *(optional, alpha field; 1 position)*. Key in one of the following bill print indicators to determine if the receivable should be selected for printing:

- ***Y*** = The receivable is selected for printing. When the document is selected and a bill is printed, the system changes this indicator to ***P***. If the bill is for an installment (an INBT record exists), the flag remains ***Y*** after a bill is printed.
- ***N*** = The document is not selected for printing.
- ***S*** = The receivable is not selected for printing. When the bill generation process is run, updates occur for OBDT, ARHT, and APPL as if the bill had printed. This field changes to ***P***.
- ***E*** = The receivable is not selected for printing. When the bill generation process is run, this field changes to ***P***.
- ***C*** = The receivable is selected for printing. When the document is selected and a bill is printed, the system leaves this indicator as ***C***. Bills continue to be printed until the receivable amount is zero.

[8] **Coll Due Date** *(no-entry)*. Displays the date the funds are expected to be received before the receivable is considered overdue.

[9] **Last Dun Date** *(no-entry)*. Displays the date the last dunning notice was sent to the vendor or provider for this receivable.

[10] **Dun Cnt** *(no-entry)*. Displays the number of dunning letters that have been sent to the vendor or provider for this receivable.

```
ACTION: S [1] TABLEID: OBDT [2] USERID: NFxx [3]
OUTSTANDING BILLING DOCUMENTS REFERENCE TABLE
KEY IS PAYER ID, BD ID

                                BILL PRINT  COLL DUE  LAST DUN  DUN  WAIV OVDUE
     PAYER ID       BD ID      DATE / IND    DATE     DATE    CNT  FLAG  STAT
     ------------ ------------- ---------- --------  --------  ---  ---- -----
        [4]          [5]        [6]   [7]   [8]       [9]     [10] [11]  [12]
01-
     ORG AMT: [13]               OPN AMT: [14]              OD DATE: [15]
02-
     ORG AMT:                    OPN AMT:                   OD DATE:
03-
     ORG AMT:                    OPN AMT:                   OD DATE:
04-
     ORG AMT:                    OPN AMT:                   OD DATE:
05-
     ORG AMT:                    OPN AMT:                   OD DATE:
06-
     ORG AMT:                    OPN AMT:                   OD DATE:
```

Figure 8:51. Outstanding Billing Documents Reference Table (OBDT)

11 **Waiv Flag** *(optional, alpha field; max. of 2 positions)*. Key in one of the below waiver flags used to determine whether or not the overdue changes to which this receivable is subject, should be waived:

A	=	Waive administrative charges only
I	=	Waive interest only
P	=	Waive penalties only
W	=	Waive interest, administrative charges, and penalties
AP	=	Waive administrative charges and penalties
IA	=	Waive interest and administrative charges
IP	=	Waive interest and penalties

12 **Ovdue Stat** *(optional, alphanumeric field; 2 positions)*. Key in the overdue status code used to determine the status of an overdue receivable.

13 **Org Amt** *(no-entry)*. Displays the amount of the principal for the billing document.

14 **Opn Amt** *(no-entry)*. Displays the sum of the principal, interest, administrative charges, and penalties minus the collected amount.

15 **OD Date** *(optional, numeric field; 6 positions)*. Key in the date for the current overdue status code. This date cannot be earlier than the collected due date.

After keying in the data, press [Enter]. All records (lines) that are error-free or tagged with warning messages are added; records that contain either overrideable or fatal errors are not added. The message *All Lines Added* is displayed at the bottom of the screen to indicate that all or some records have been added; if any records contain errors, error messages are also displayed. For more information about error messages and correcting errors, see **Part 2, System Edits**.

- To add another record, repeat the above process.

Performing Other Actions. For instructions on displaying, changing, and deleting a record, or performing any other action, see **Part 2, Using Tables**.

Federal Object Class (Object Category) Reference Table (OCAT)

The OCAT is used to define the Federal Object Class codes used for reporting.

To access the OCAT, at the FFS screen, key in ***N*** at the Action field and ***OCAT*** at the TableID field, then press [Enter]. The OCAT screen (**Figure 8:52**) is displayed with an ***S*** in the Action field.

Instructions for adding are discussed below.

Note: If you are not authorized to perform a specific processing action (adding, changing, or deleting a record) in this table, contact your Functional Administrator responsible for Table Maintenance.

Adding A Record. At the OCAT screen, complete the fields as follows:

[1] **Action** *(required, alpha field; 1 position)*. Key in ***A***.

[2] **TableID** (*no-entry*). Displays ***OCAT***.

[3] **UserID** (*no-entry*). Displays the user ID.

[4] **BFY** 🔑 *(required, numeric field; 2 positions)*. Key in the last 2 digits of the budget fiscal year.

[5] **Fed Obj Class** 🔑 *(required, alphanumeric field; 2 positions)*. Key in the code used to define the federal object class.

[6] **Federal Object Class Name** *(optional, alphanumeric field; max. of 30 positions)*. Key in the federal object class name used for reporting purposes.

[7] **Short Name** 🔑 *(optional, alphanumeric field; max. of 12 positions)*. Key in the name to appear on reports when there is not enough room for the full federal object class name.

After keying in the data, press [Enter]. All records (lines) that are error-free or tagged with warning messages are added; records that contain either overrideable or fatal errors are not added. The message *All Lines Added* is displayed at the bottom of the screen to indicate that all or some records have been added; if any records contain errors, error messages are also displayed. For more information about error messages and correcting errors, see **Part 2, System Edits**.

- To add another record, repeat the above process.

Performing Other Actions. For instructions on displaying, changing, and deleting a record, or performing any other action, see **Part 2, Using Tables**.

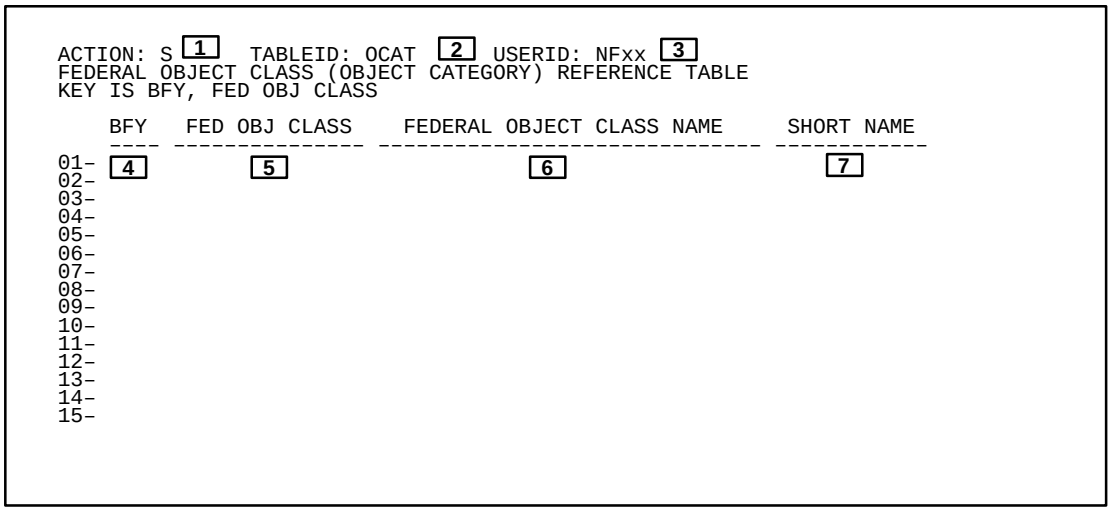

Figure 8:52. Federal Object Class (Object Category) Reference Table (OCAT)

Object Class Reference Table (OCLS)

The OCLS is used to define object classes used for reporting.

To access the OCLS, at the FFS screen, key in ***N*** at the Action field and ***OCLS*** at the TableID field, then press [Enter]. The OCLS screen (**Figure 8:53**) is displayed with an ***S*** in the Action field.

Instructions for adding are discussed below.

Note: If you are not authorized to perform a specific processing action (adding, changing, or deleting a record) in this table, contact your Functional Administrator responsible for Table Maintenance.

Adding A Record. At the OCLS screen, complete the fields as follows:

[1] **Action** *(required, alpha field; 1 position)*. Key in ***A***.

[2] **TableID** (*no-entry*). Displays ***OCLS***.

[3] **UserID** (*no-entry*). Displays the user ID.

[4] **BFY** 🔑 *(required, numeric field; 2 positions)*. Key in the last 2 digits of the budget fiscal year.

[5] **Object Class** 🔑 *(required, alphanumeric field; max. of 3 positions)*. Key in the code used to define the object class.

[6] **Object Class Name** *(optional, alphanumeric field; max. of 30 positions)*. Key in the object class name used on reports.

[7] **Short Name** *(optional, alphanumeric field; max. of 12 positions)*. Key in the name to appear on reports when there is not enough room for the full object class name.

After keying in the data, press [Enter]. All records (lines) that are error-free or tagged with warning messages are added; records that contain either overrideable or fatal errors are not added. The message *All Lines Added* is displayed at the bottom of the screen to indicate that all or some records have been added; if any records contain errors, error messages are also displayed. For more information about error messages and correcting errors, see **Part 2, System Edits**.

- To add another record, repeat the above process.

Performing Other Actions. For instructions on displaying, changing, and deleting a record, or performing any other action, see **Part 2, Using Tables**.

```
ACTION: S [1] TABLEID: OCLS [2] USERID: NFxx [3]
OBJECT CLASS REFERENCE TABLE
KEY IS BFY, OBJECT CLASS

    BFY  OBJECT CLASS       OBJECT CLASS NAME          SHORT NAME
    ---- ------------ ------------------------------ ------------
01- [4]    [5]                  [6]                    [7]
02-
03-
04-
05-
06-
07-
08-
09-
10-
11-
12-
13-
14-
15-
```

Figure 8:53. Object Class Reference Table (OCLS)

On Demand Requisition Print Data Entry Table (ODRQ)

The ODRQ is used to print requisitions on request.

To access the ODRQ, at the FFS screen, key in ***N*** at the Action field and ***ODRQ*** at the TableID field, then press [Enter]. The ODRQ screen (**Figure 8:54**) is displayed with an ***S*** in the Action field.

Instructions for adding are discussed below.

Note: If you are not authorized to perform a specific processing action (adding, changing, or deleting a record) in this table, contact your Functional Administrator responsible for Table Maintenance.

Adding A Record. At the ODRQ screen, complete the fields as follows:

[1] **Action** *(required, alpha field; 1 position)*. Key in ***A***.

[2] **TableID** (*no-entry*). Displays ***ODRQ***.

[3] **UserID** (*no-entry*). Displays the user ID.

[4] **Re-print Date** *(required, numeric field; 6 positions)*. To reprint a requisition, key in the last print date in this field and select the requisition for printing.

Note: Fields [5] through [16] are used to override standard job specifications contained in the JCLT. Contact you system administrator for information on the valid values for these fields.

[5] **Override Flag** *(optional, alpha field; 1 position)*. Key in ***Y*** if a requisition is selected for printing. Then the Last Change Status fields in the REQH, REQL, and REQC is set to spaces. The result is that nothing is displayed as changed on the requisition print.

[6] **Job Name** *(optional, numeric field; 8 positions)*. Key in an 8-character job name if you wish to override the job name in the JCLT. You may want to use a job name to allow for easier identification of printed requisition output.

[7] **Account** *(optional default, alphanumeric field; max. of 10 positions)*. Key in an account charged for this job run. If left blank, the system defaults to the account stored in the JCLT. If the default account is not valid, the system rejects the printing request.

[8] **Bin–Room** *(optional default, alphanumeric field; max. of 8 positions)*. Key in the bin room to which the output from this job is routed. If left blank, the system defaults to the value stored in the JCLT.

[9] **Priority** *(optional, alphanumeric field; 2 positions)*. Key in the appropriate priority code if you wish to submit your job with other than the default priority.

[10] **Class** *(optional, alphanumeric field; 1 position)*. Key in a valid value if you wish to override the default job class.

[11] **Destination** *(optional, alphanumeric field; max. of 8 positions)*. Key in a valid printer identification (either remote or local – not default) to direct the requisition output.

Note: Fields [12] through [16] are used to select requisitions for printing. You may select up to six requisitions; however, each selected order is submitted as a separate print job.

```
ACTION: S [1]  TABLEID: ODRQ [2] USERID: NFxx [3]
                 *** ON DEMAND REQUISITION PRINT DATA ENTRY TABLE ***

RE–PRINT DATE: [4]          OVERRIDE FLAG: [5]
      JOBNAME: [6]          ACCOUNT:  [7]       BIN–ROOM:  [8]
     PRIORITY: [9]            CLASS:  [10]   DESTINATION:  [11]

          TRANS CODE  TRANS NUMBER  SELECT   LAST PRINT DATE LAST CHANGE STATUS
          ----------  ------------  ------   --------------- ------------------
               [12]        [13]       [14]          [15]            [16]
01–
    >
    >
02–
    >
    >
03–
    >
    >
04–
    >
    >
```

Figure 8:54. On Demand Requisition Print Data Entry Table (ODRQ)

12 **Trans Code** *(required, alphanumeric field; max. of 20 positions)*. Key in a transaction code to specify the requisition to be printed. If left blank when a scan is being performed, the REQH is scanned from the beginning of the table.

13 **Trans Number** *(required, alphanumeric field; max. of 20 positions)*. Key in a transaction number to specify the requisition to be printed. If left blank when a scan is being performed, the REQH is scanned from the beginning of the table.

14 **Select** *(required, alpha field; 1 position)*. Key in ***Y*** to select a requisition for printing. The Action (**Field 1**) must be **C** to instruct the program to submit the print job. The requisition prints when any of the following conditions exist:

- The Last Print Date field is blank.
- The Last Change Status field is ***C***.
- The Re-Print Date field is equal to the Last Print Date field.

15 **Last Print Date** *(no-entry)*. Displays the current last print date from the REQH. After selecting a requisition for print, the program changes the last print date to the current date.

16 **Last Change Status** *(no-entry)*. Displays if the requisition appears as changed when it is printed. A value of **C** indicates the requisition appears as changed. A value of **A** indicates the requisition appears as changed only on reprints. A value of *spaces* indicates the requisition does not appear as changed. **Note:** If the requisition is printed online with the override parameter set to *Y*, then the Last Change Status field is set to spaces before the requisition is printed.

- The Last Print Date field is blank.
- The Last Change Status field is ***C.***
- The Re-Print Date field is equal to the Last Print Date field.

After keying in the data, press [Enter]. All records (lines) that are error-free or tagged with warning messages are added; records that contain either overrideable or fatal errors are not added. The message *All Lines Added* is displayed at the bottom of the screen to indicate that all or some records have been added; if any records contain errors, error messages are also displayed. For more information about error messages and correcting errors, see **Part 2, System Edits**.

- To add another record, repeat the above process.

Performing Other Actions. For instructions on displaying, changing, and deleting a record, or performing any other action, see **Part 2, Using Tables**.

Object Group Reference Table (OGRP)

The OGRP is used to define object group codes used for reporting.

To access the OGRP, at the FFS screen, key in ***N*** at the Action field and ***OGRP*** at the TableID field, then press [Enter]. The OGRP screen (**Figure 8:55**) is displayed with an ***S*** in the Action field.

Instructions for adding are discussed below.

Note: If you are not authorized to perform a specific processing action (adding, changing, or deleting a record) in this table, contact your Functional Administrator responsible for Table Maintenance.

Adding A Record. At the OGRP screen, complete the fields as follows:

[1] **Action** *(required, alpha field; 1 position)*. Key in ***A***.

[2] **TableID** (*no-entry*). Displays ***OGRP***.

[3] **UserID** (*no-entry*). Displays the user ID.

[4] **BFY** 🔑 *(required, numeric field; 2 positions)*. Key in the last 2 digits of the budget fiscal year.

[5] **Object Grp** 🔑 *(required, alphanumeric field; 2 positions)*. Key in the code used to define the object group.

[6] **Object Group Name** *(optional, alphanumeric field; max. of 30 positions)*. Key in the object group name to be used on reports.

[7] **Short Name** *(optional, alphanumeric field; max. of 12 positions)*. Key in the name to appear on reports when there is not enough room for the full object group name.

After keying in the data, press [Enter]. All records (lines) that are error-free or tagged with warning messages are added; records that contain either overrideable or fatal errors are not added. The message *All Lines Added* is displayed at the bottom of the screen to indicate that all or some records have been added; if any records contain errors, error messages are also displayed. For more information about error messages and correcting errors, see **Part 2, System Edits**.

- To add another record, repeat the above process.

Performing Other Actions. For instructions on displaying, changing, and deleting a record, or performing any other action, see **Part 2, Using Tables**.

```
ACTION: S [1]  TABLEID: OGRP [2]  USERID: NFxx [3]
OBJECT GROUP REFERENCE TABLE
KEY IS BFY, OBJECT GRP

    BFY  OBJECT GRP        OBJECT GROUP NAME          SHORT NAME
   ---  ----------   ------------------------------  ------------
01- [4]    [5]                 [6]                      [7]
02-
03-
04-
05-
06-
07-
08-
09-
10-
11-
12-
13-
14-
15-
```

Figure 8:55. Object Group Reference Table (OGRP)

Organization Reference Table (ORGN)

The ORGN is used to:

- Define organization codes and assign division/organization relationships.
- Define an organization as a budget organization, cost organization, or both.
- Define an organization as decentralized for travel order processing.
- Define default program codes used when processing documents for the organization.
- Define other organization-based options.

To access the ORGN, at the FFS screen, key in ***N*** at the Action field and ***ORGN*** at the TableID field, then press [Enter]. The ORGN screen (**Figure 8:56**) is displayed with an ***S*** in the Action field.

Instructions for adding are discussed below.

Note: If you are not authorized to perform a specific processing action (adding, changing, or deleting a record) in this table, contact your Functional Administrator responsible for Table Maintenance.

Adding A Record. At the ORGN screen, complete the fields as follows:

[1] **Action** *(required, alpha field; 1 position)*. Key in ***A***.

[2] **TableID** (*no-entry*). Displays ***ORGN***.

[3] **UserID** (*no-entry*). Displays the user ID.

[4] **BFY** 🔑 *(required, numeric field; 2 positions)*. Key in the last 2 digits of the budget fiscal year.

[5] **Organization** 🔑 *(required, alphanumeric field; 5 positions)*. Key in the code used to define the organization.

[6] **Division** *(required, alphanumeric field; 2 positions)*. Key in the division code associated with the organization. The code must be valid in the DVSN.

[7] **Org Name** *(optional, alphanumeric field; max. of 30 positions)*. Key in the organization name to be used on reports.

[8] **Short Name** *(optional, alphanumeric field; max. of 12 positions)*. Key in the name to appear on reports when there is not enough room for the full organization name.

[9] **Org Manager** *(optional, alphanumeric field; max. of 30 positions)*. Key in the name of the organization manager to appear on reports.

[10] **Level Ind** *(required, numeric field; 1 position)*. Key in the number value, from ***1*** through ***9***, for the level of this organization.

[11] **Program** *(optional, alphanumeric field; 9 positions)*. Key in the program code for the system to use as a default program code. When processing documents for this organization and when no other program code is supplied, the system defaults to this code. If you do not want a default code associated with the organization defined in the line, leave this field blank.

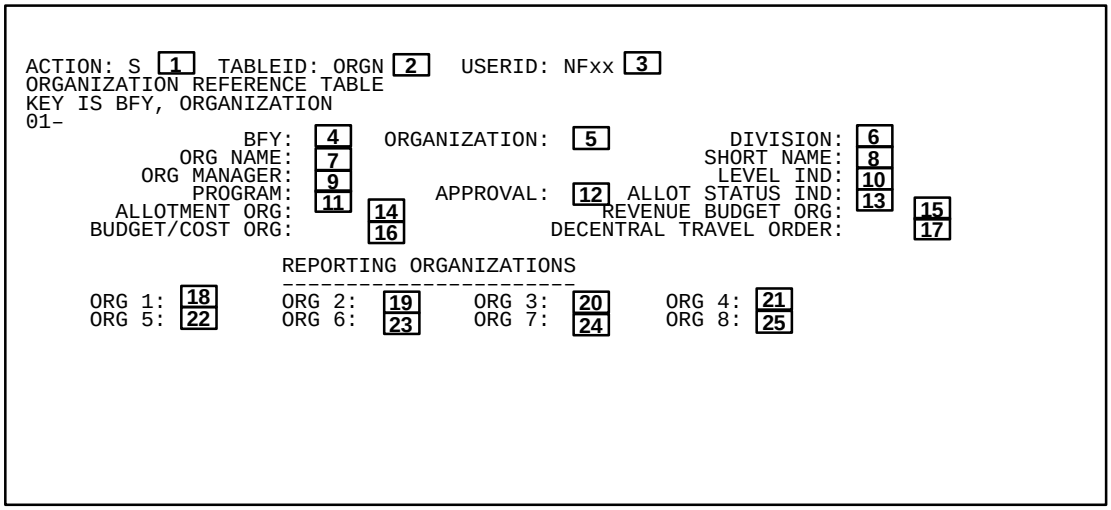

Figure 8:56. Organization Reference Table (ORGN)

12 **Approval** *(optional default, alpha field; 1 position)*. Key in ***Y*** if this organization has its own approval requirements which overrides both the default approval requirements established for each type of document and any existing division approval requirements. If this indicator is ***Y***, the actual approval requirements for the organization are established in the APRV. If left blank, the system defaults to ***N***.

13 **Allot Status Ind** (*no-entry*). Displays a ***Y*** when pending allotments for an organization are submitted for approval. When this field is set to ***Y***, all allotment documents for this organization are rejected until an Allotment Approval document is processed. Approval or rejection sets the field back to ***N***.

14 **Allotment Org** *(optional default, alphanumeric field; 5 positions)*. Key in the code of the allotment organization if this organization is funded from an allotment using a different organization code. This field must be blank on original entry for an organization that is an allotment organization. If left blank, the system defaults to the organization code (**Field 5**).

15 **Revenue Budget Org** *(optional, alphanumeric field; max. of 7 positions)*. Key in the appropriate organization code if this organization should point to a different organization for posting to the REVB.

16 **Budget/Cost Org** *(optional default, alpha field; 1 position)*. Key in one of the following:

- ***E*** = The organization can be used as either a budget organization or a cost organization.
- ***C*** = The organization can only be entered as a cost organization on spending documents.
- ***B*** = The organization can only be entered as a budget organization on spending documents.

If left blank, the system defaults to ***E***.

17 **Decentral Travel Order** *(optional default, alpha field; 1 position)*. Key in ***Y*** if this organization is decentralized for travel order processing. If left blank, the system defaults to the value of the Travel Decentral Flag on the DVSN.

18 **Org 1 (Reporting Organizations)** *(conditional, alphanumeric field; max. of 7 positions)*. If the Level Indicator (**Field 10**) is ***2*** through ***9***, key in the appropriate level 1 organization to which this level 2 organization belongs.

19 **Org 2 (Reporting Organizations)** *(conditional, alphanumeric field; max. of 7 positions)*. If the Level Indicator (**Field 10**) is ***3*** through ***9***, key in the appropriate level 2 organization to which this level 3 organization belongs.

20 **Org 3 (Reporting Organizations)** *(conditional, alphanumeric field; 5 positions)*. If the Level Indicator (**Field 10**) is ***4*** through ***9***, key in the appropriate level 3 organization to which this level 4 organization belongs.

21 **Org 4 (Reporting Organizations)** *(conditional, alphanumeric field; 5 positions)*. If the Level Indicator (**Field 10**) is ***5*** through ***9***, key in the appropriate level 4 organization to which this level 5 organization belongs.

22 **Org 5 (Reporting Organizations)** *(conditional, alphanumeric field; 5 positions)*. If the Level Indicator (**Field 10**) is ***6*** through ***9***, key in the appropriate level 5 organization to which this level 6 organization belongs.

23 **Org 6 (Reporting Organizations)** *(conditional, alphanumeric field; 5 positions)*. If the Level Indicator (**Field 10**) is ***7*** through ***9***, key in the appropriate level 6 organization to which this level 7 organization belongs.

24 **Org 7 (Reporting Organizations)** *(conditional, alphanumeric field; 5 positions)*. If the Level Indicator (**Field 10**) is ***8*** through ***9***, key in the appropriate level 7 organization to which this level 8 organization belongs.

25 **Org 8 (Reporting Organizations)** *(conditional, alphanumeric field; 5 positions)*. If the Level Indicator (**Field 10**) is ***9***, key in the appropriate level 8 organization to which this level 9 organization belongs.

After keying in the data, press [Enter]. All records (lines) that are error-free or tagged with warning messages are added; records that contain either overrideable or fatal errors are not added. The message *All Lines Added* is displayed at the bottom of the screen to indicate that all or some records have been added; if any records contain errors, error messages are also displayed. For more information about error messages and correcting errors, see **Part 2, System Edits**.

- To add another record, repeat the above process.

Performing Other Actions. For instructions on displaying, changing, and deleting a record, or performing any other action, see **Part 2, Using Tables**.

Object Type Reference Table (OTYP)

The OTYP is used to define object type codes used to group similar object codes together for reporting. Grouping of the object codes into the various types occurs in the BOCT.

To access the OTYP, at the FFS screen, key in ***N*** at the Action field and ***OTYP*** at the TableID field, then press [Enter]. The OTYP screen (**Figure 8:57**) is displayed with an ***S*** in the Action field.

Instructions for adding are discussed below.

Note: If you are not authorized to perform a specific processing action (adding, changing, or deleting a record) in this table, contact your Functional Administrator responsible for Table Maintenance.

Adding A Record. At the OTYP screen, complete the fields as follows:

[1] **Action** *(required, alpha field; 1 position)*. Key in ***A***.

[2] **TableID** (*no-entry*). Displays ***OTYP***.

[3] **UserID** (*no-entry*). Displays the user ID.

[4] **BFY** 🔑 *(required, numeric field; 2 positions)*. Key in the last 2 digits of the budget fiscal year.

[5] **Object Typ** 🔑 *(required, alphanumeric field; 3 positions)*. Key in the code used to define the object type.

[6] **Object Type Name** *(optional, alphanumeric field; max. of 30 positions)*. Key in the object type name to use on reports.

[7] **Short Name** *(optional, alphanumeric field; max. of 12 positions)*. Key in the name to appear on reports when there is not enough room for the full object type name.

After keying in the data, press [Enter]. All records (lines) that are error-free or tagged with warning messages are added; records that contain either overrideable or fatal errors are not added. The message *All Lines Added* is displayed at the bottom of the screen to indicate that all or some records have been added; if any records contain errors, error messages are also displayed. For more information about error messages and correcting errors, see **Part 2, System Edits**.

- To add another record, repeat the above process.

Performing Other Actions. For instructions on displaying, changing, and deleting a record, or performing any other action, see **Part 2, Using Tables**.

```
ACTION: S [1]  TABLEID: OTYP [2]  USERID: NFxx [3]
OBJECT TYPE REFERENCE TABLE
KEY IS BFY, OBJECT TYPE

     BFY  OBJECT TYP        OBJECT TYPE NAME          SHORT NAME
    ---  ----------  ------------------------------  ------------
01-
02-  [4]     [5]                  [6]                    [7]
03-
04-
05-
06-
07-
08-
09-
10-
11-
12-
13-
14-
15-
```

Figure 8:57. Object Type Reference Table (OTYP)

Program Reference Table (PGMT)

The PGMT is used:

- Define codes for programs.
- Group similar programs into higher level classifications.
- Define the allotment program used when spending controls are enforced by the program code.

Note: The PGMT will function as an inquiry table for most RD's users. Only the Functional Administrator and Co-Administrator will have authority to add, modify, or delete records in the PGMT.

To access the PGMT, at the FFS screen, key in ***N*** at the Action field and ***PGMT*** at the TableID field, then press [Enter]. The PGMT screen (**Figure 8:58**) is displayed with an ***S*** in the Action field.

Displaying A Record. For instructions on displaying a record, see Part 2, Using Tables.

1 **Action**. Displays ***S.***

2 **TableID**. Displays ***PGMT***.

3 **UserID**. Displays the user ID.

4 **Budget Fiscal Year** 🔑. Displays the budget fiscal year.

5 **Program** 🔑. Displays the program code.

6 **Program Class** . Displays the program class.

7 **Program Category** . Displays the program category.

8 **Program Type**. Displays the program type.

9 **Program Group** . Displays the program group.

10 **Allotment Program**. Displays the allotment program.

11 **Program Name** . Displays the program name.

12 **Short Name**. Displays the short program name.

After viewing the data, you have several options, as described below:

- To view another record, repeat the above process.
- To view another table, key in ***N*** at the Action field and the applicable table ID at the TableID field, then press [Enter].
- To access a document screen, key in ***L*** at the Action field and the applicable document transaction code at the TableID field. Use the [Space Bar] to erase the remaining 2 characters, then press [Enter].
- To exit the system, follow the sign-off instructions under Part 2, Accessing The System.

```
ACTION: S  1  TABLEID: PGMT  2   USERID: NFxx   3
PROGRAM REFERENCE TABLE
KEY IS BUDGET FISCAL YEAR, PROGRAM
    BUDGET
    FISCAL                PROGRAM  PROGRAM   PROGRAM  PROGRAM  ALLOTMENT
     YEAR    PROGRAM       CLASS   CATEGORY   TYPE     GROUP    PROGRAM
    ------  ---------    -------  --------  -------  -------  ---------
01-   4          5          6        7        8     9                10
    PROGRAM NAME: 11                                  SHORT NAME:  12
02-
    PROGRAM NAME:                                     SHORT NAME:
03-
    PROGRAM NAME:                                     SHORT NAME:
04-
    PROGRAM NAME:                                     SHORT NAME:
05-
    PROGRAM NAME:                                     SHORT NAME:
06-
    PROGRAM NAME:                                     SHORT NAME:
07-
    PROGRAM NAME:                                     SHORT NAME:
```

Figure 8:58. Program Reference Table (PGMT)

Prompt Pay Reference Table (PPAY)

The PPAY is used to:

- Establish the system processing rules for prompt payment.
- Define interest and penalty rates for invoices paid late according to prompt payment requirements.

To access the PPAY, at the FFS screen, key in ***N*** at the Action field and ***PPAY*** at the TableID field, then press [Enter]. The PPAY screen (**Figure 8:59**) is displayed with an ***S*** in the Action field.

Instructions for adding are discussed below.

Note: If you are not authorized to perform a specific processing action (adding, changing, or deleting a record) in this table, contact your Functional Administrator responsible for Table Maintenance.

Adding A Record. At the PPAY screen, complete the fields as follows:

[1] **Action** *(required, alpha field; 1 position)*. Key in ***A***.

[2] **TableID** (*no-entry*). Displays ***PPAY***.

[3] **UserID** (*no-entry*). Displays the user ID.

[4] **Fiscal Year** *(required, numeric field; 2 positions)*. Key in the last 2 digits of the applicable fiscal year.

[5] **Prompt Pay Type** *(required, alphanumeric field; 1 position)*. Key in a user-defined code for the prompt pay type associated with the commodities or services.

[6] **Payment Lag** *(optional default, alphanumeric field; 3 positions)*. Key in the number of days that a payment should be held before being paid. If left blank, the system defaults to zero.

Note: This field is used in conjunction with the Payment Scheduling Base Date (determined in the payment voucher program) and Select Days Lag in the DOPT to determine scheduled payment date.

[7] **Interest # of Days** *(optional default, alphanumeric field; 3 positions)*. Key in the incremental number of days from payment lag after which interest and penalties would begin to accrue on a payment. If left blank, the system defaults to zero.

[8] **Trigger Date Flag** *(required, alpha field; 1 position)*. Key in one of the following to determine the appropriate Schedule Payment Date (by the PV processor), and the Interest Base Date (during the Automated Disbursement process).

```
ACTION: S  [1] TABLEID: PPAY [2]  USERID: NFxx [3]
PROMPT PAY REFERENCE TABLE
KEY IS FISCAL YEAR, PROMPT PAY TYPE
01-
    FISCAL YEAR:  [4]        PROMPT PAY TYPE:  [5]

                    PAYMENT LAG:  [6]
              INTEREST # OF DAYS:  [7]     TRIGGER DATE FLAG:   [8]
                    PENALTY RATE:  [9]        PENALTY AMOUNT:  [10]
    EXCEPTION DAYS TRIGGER LEVEL:  [11]

    EFFECTIVE INTEREST DATE                EFFECTIVE INTEREST RATE

      [12]   /    /                              [13]
             /    /
             /    /
             /    /
             /    /
```

Figure 8:59. Prompt Pay Reference Table (PPAY)

L = Use for payments subject to the standard prompt pay rules where schedule date is based on the latter of the invoice log date versus acceptance date.

D = Use for special commodities payments for which prompt pay rules are based on the acceptance/delivery of goods.

I = Use for construction in progress, and special commodities payments for which prompt pay rules are based on the invoice log date.

9 **Penalty Rate** *(conditional, numeric field; 6 positions)*. If interest number of days (**Field 7**) is entered, key in the penalty rate that would apply if a payment qualifies for the application of a penalty. This is an annual rate. If left blank, the system defaults to ***0.00***.

10 **Penalty Amount** *(optional default, numeric field; max. of 17 positions)*. Key in the dollar amount of a flat rate penalty applied to any payment that qualifies. This amount is added to any penalty amount calculated based on the penalty rate (**Field 9**) If left blank, the system defaults to ***0.00***.

11 **Exception Days Trigger Level** *(optional default, numeric field; 3 positions)*. Key in the maximum number of days from the time an invoice is logged until the time it is returned to the vendor before exception days begin. If left blank, the system defaults to ***0.00***.

12 **Effective Interest Date** *(conditional, numeric field; 6 positions)*. If the effective interest rate (**Field 13**) is entered, key in the first date that the interest rate is effective. Up to five separate dates and rates may be entered. The interest date must be valid in the CLDT.

13 **Effective Interest Rate** *(conditional, numeric field; 6 positions)*. If the effective interest date (**Field 12**) is entered, key in the effective interest rate in the format ***99.999***. This is an annualized rate.

After keying in the data, press [Enter]. All records (lines) that are error-free or tagged with warning messages are added; records that contain either overrideable or fatal errors are not added. The message *All Lines Added* is displayed at the bottom of the screen to indicate that all or some records have been added; if any records contain errors, error messages are also displayed. For more information about error messages and correcting errors, see **Part 2, System Edits**.

- To add another record, repeat the above process.

Performing Other Actions. For instructions on displaying, changing, and deleting a record, or performing any other action, see **Part 2, Using Tables**.

Prompt Pay Detail Table (PPDT)

The PPDT is used to enter prompt payment information for a given vendor invoice, which is used in the production of the Prompt Payment Report.

To access the PPDT, at the FFS screen, key in ***N*** at the Action field and ***PPDT*** at the TableID field, then press [Enter]. The PPDT screen (**Figure 8:60**) is displayed with an ***S*** in the Action field.

Instructions for adding are discussed below.

Note: If you are not authorized to perform a specific processing action (adding, changing, or deleting a record) in this table, contact your Functional Administrator responsible for Table Maintenance.

Adding A Record. At the PPDT screen, complete the fields as follows:

[1] **Action** *(required, alpha field; 1 position)*. Key in ***A***.

[2] **TableID** *(no-entry)*. Displays ***PPDT***.

[3] **UserID** *(no-entry)*. Displays the user ID.

[4] **Vendor ID** 🔑 *(required, alphanumeric field; 11 positions)*. Key in the vendor on the invoice.

[5] **Invoice Num** 🔑 *(optional, alphanumeric field; 20 positions)*. Key in the number of the invoice.

[6] **Invoice Date** 🔑 *(required, numeric field; 6 positions)*. Key in the date of the invoice.

[7] **Check Num** 🔑 *(optional, alphanumeric field; 8 positions)*. Key in the number of the check paid against this invoice.

[8] **D.O.** 🔑 *(required, alphanumeric field; 4 positions)*. Key in the code number of the Treasury disbursing office that issued the check paid against this invoice.

[9] **Cancel Status** *(no-entry)*. Displays one of the following values to determine how to update the PPST when a Treasury schedule is backed out, a check cancellation occurs, or a check cancellation is backed out:

- ***C*** = Do not update the PPST. A check cancellation was backed out after the payment updated the PPST, but before the affects of the check cancellation had updated the PPST.
- ***B*** = Update the PPST. A check cancellation was backed out after both the original payment and the check cancellation had updated the PPST.
- ***X*** = Do not update the PPST. An original Treasury schedule was confirmed, but backed out before the payments updated the PPST; or a check cancellation occurred before the payment updated the PPST.
- ***Y*** = Subtract the amounts from the PPST. A Treasury schedule confirmation was backed out after the payment updated the PPST; or a check was canceled after the payment updated the PPST.

If this field is ***blank***, update the PPST. An original Treasury schedule has been confirmed.

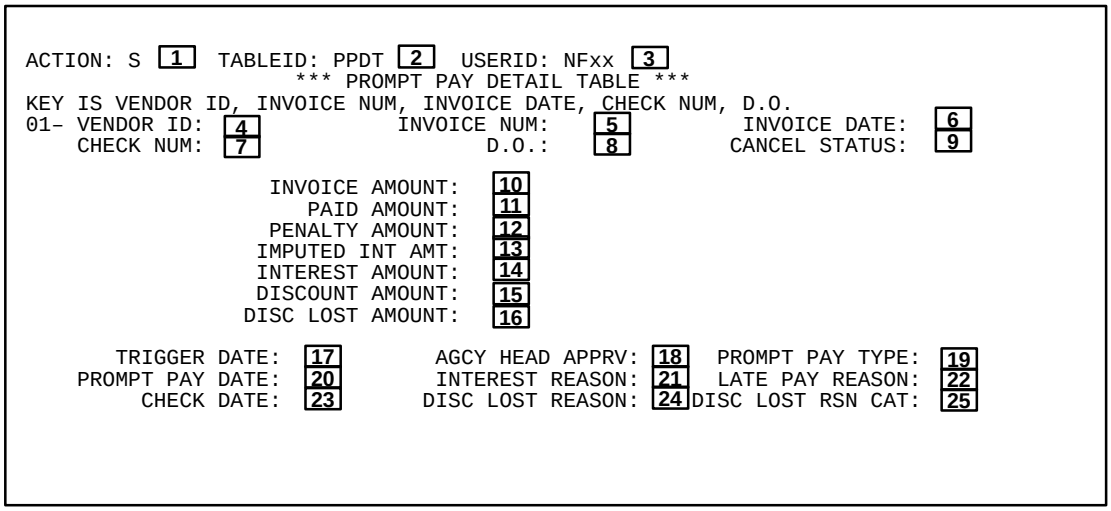

Figure 8:60. Prompt Pay Detail Table (PPDT)

10 **Invoice Amount** *(optional default, numeric field; 18 positions)*. Key in the amount of the invoice. If left blank, the system defaults to ***0***.

11 **Paid Amount** *(optional default, numeric field; 18 positions)*. Key in the amount of the check that paid for this invoice. If left blank, the system defaults to ***0***.

12 **Penalty Amount** *(optional default, numeric field; 18 positions)*. Key in the amount of the penalties paid by this check for this invoice. If left blank, the system defaults to ***0***.

13 **Imputed Int Amt** *(optional default, numeric field; 18 positions)*. Key in the computed amount of interest due on the payment. This may be different from the interest amount if: 1) it is calculated based on the date the payment was actually paid by Treasury; 2) it includes interest payments of less than one dollar, and 3) it is based on the amount of the invoice and not the payment amount. If left blank, the system defaults to ***0***.

14 **Interest Amount** *(optional default, numeric field; 18 positions)*. Key in the amount of interest paid by this check for this invoice. If left blank, the system defaults to ***0***.

15 **Discount Amount** *(optional default, numeric field; 18 positions)*. Key in the amount of all discounts taken by this check against this invoice. Key in this amount as a negative. If left blank, the system defaults to ***0***.

16 **Disc Lost Amount** *(optional default, numeric field; 18 positions)*. Key in the amount of all discounts available but not taken by this invoice. Key in this amount as a negative. If left blank, the system defaults to ***0***.

17 **Trigger Date** *(required, numeric field; 6 positions)*. Key in the date used as the base date for the prompt payment calculations.

18 **Agcy Head Apprv** *(optional, alpha field; 1 position)*. Key in ***A*** to indicate that the payment is an accelerated payment.

19 **Prompt Pay Type** *(required, alphanumeric field; 1 position)*. Key in the prompt payment type for the payment document. It is used to access the PPAY to determine the terms applicable to this payment under the Prompt Payment Act.

20 **Prompt Pay Date** *(required, numeric field; 6 positions)*. Key in the date by which the invoice should have been paid to avoid interest and penalties under the Prompt Payment Act.

21 **Interest Reason** *(optional, alphanumeric field; 1 position)*. Key in the interest reason code that describes the reason interest was paid. This is initially set to the code entered in the document or assigned by the disbursements process. If Interest Amount is ***0***, leave blank. See the IRCT for valid codes.

22 **Late Pay Reason** *(no-entry)*. Displays the late payment reason category that corresponds to the interest reason code in the IRCT.

23 **Check Date** *(required, numeric field; 6 positions)*. Key in the date the invoice was actually paid by Treasury.

24 **Disc Lost Reason** *(optional, alphanumeric field; 1 position)*. Key in the reason code identifying why the discount was lost.

25 **Disc Lost Rsn Cat** *(no-entry)*. Displays the discount lost reason category that corresponds to the discount lost reason code in the DLRC.

After keying in the data, press [Enter]. All records (lines) that are error-free or tagged with warning messages are added; records that contain either overrideable or fatal errors are not added. The message *All Lines Added* is displayed at the bottom of the screen to indicate that all or some records have been added; if any records contain errors, error messages are also displayed. For more information about error messages and correcting errors, see **Part 2, System Edits**.

- To add another record, repeat the above process.

Performing Other Actions. For instructions on displaying, changing, and deleting a record, or performing any other action, see **Part 2, Using Tables**.

Prompt Pay Summary Table (PPST)

The PPST is used to enter information for the Prompt Payment Report for a given fiscal quarter and disbursing office. This view is in conjunction with the PPS2 and PPS3 tables.

To access the PPST, at the FFS screen, key in ***N*** at the Action field and ***PPST*** at the TableID field, then press [Enter]. The PPST screen (**Figure 8:61**) is displayed with an ***S*** in the Action field.

Instructions for adding are discussed below.

Note: If you are not authorized to perform a specific processing action (adding, changing, or deleting a record) in this table, contact your Functional Administrator responsible for Table Maintenance.

Adding A Record. At the PPST screen, complete the fields as follows:

[1] **Action** *(required, alpha field; 1 position)*. Key in ***A***.

[2] **TableID** *(no-entry)*. Displays ***PPST***.

[3] **UserID** *(no-entry)*. Displays the user ID.

[4] **FY/FQ** *(optional, numeric field; 3 positions)*. Key in the fiscal year and quarter in which the invoices in this report were paid.

[5] **D.O.** *(optional, alphanumeric field; 4 positions)*. Key in the code number of the Treasury disbursing office by which the invoices in this report were paid.

[6] **Invoices Subject to Prompt Pay (Amount)** *(optional default, numeric field; 26 positions)*. Key in the total dollar amount of invoices subject to prompt payment for this fiscal year and quarter. If left blank, the system defaults to ***0***.

[7] **Invoices Subject to Prompt Pay (Number)** *(optional default, numeric field; 26 positions)*. Key in the total number of invoices subject to prompt payment for this fiscal year and quarter. If left blank, the system defaults to ***0***.

[8] **Invoices Paid Late (Amount)** *(optional default, numeric field; 26 positions)*. Key in the total dollar amount of invoices subject to prompt payment and paid after the due date during this fiscal year and quarter. If left blank, the system defaults to ***0***.

[9] **Invoices Paid Late (Number)** *(optional default, numeric field; 26 positions)*. Key in the total number of invoices subject to prompt payment and paid after the due date during this fiscal year and quarter. If left blank, the system defaults to ***0***.

[10] **Interest Penalties Paid (Amount)** *(optional default, numeric field; 26 positions)*. Key in the total dollar amount of interest penalties paid during this fiscal year and quarter. If left blank, the system defaults to ***0***.

[11] **Interest Penalties Paid (Number)** *(optional default, numeric field; 26 positions)*. Key in the total number of interest penalties paid during this fiscal year and quarter. If left blank, the system defaults to ***0***.

[12] **Additional Penalties Paid (Amount)** *(optional default, numeric field; 26 positions)*. Key in the total dollar amount of other penalties paid during this fiscal year and quarter. If left blank, the system defaults to ***0***.

```
 ACTION: S [1]  TABLEID: PPST [2]  USERID: NFxx [3]
                    *** PROMPT PAY SUMMARY TABLE ***
KEY IS FY / FQ, D.O.

FY / FQ:  [4]    D.O. [5]
                                                AMOUNT          NUMBER
                                          -------------------  --------
INVOICES SUBJECT TO PROMPT PAY:                   [6]             [7]
INVOICES PAID LATE:                               [8]             [9]
INTEREST PENALTIES PAID:                          [10]            [11]
ADDITIONAL PENALTIES PAID:                        [12]            [13]

DELAY IN PAYING OFFICE RECEIPT OF:     DELAY BY PAYING OFFICE IN:
A: RECEIVING REPORT   [14]             A: TAKING DISCOUNT     [15]
B: PROPER INVOICE     [16]             B: NOTIFYING VENDOR    [17]
C: PO OR CONTRACT     [18]             C: SYSTEM PROCESSING   [19]

INTEREST DUE BUT NOT PAID – < $1.00:              [20]            [21]
                          – OTHER:                [22]            [23]
INV PAID 1 – 15 DAYS AFTER DUE DATE:              [24]            [25]
INV PAID 8+ DAYS BEFORE DUE – APPROVED:           [26]            [27]
                            – NOT APPR:           [28]            [29]
```

Figure 8:61. Prompt Pay Summary Table (PPST)

13 **Additional Penalties Paid (Number)** *(optional default, numeric field; 26 positions)*. Key in the total number of other penalties paid during this fiscal year and quarter. If left blank, the system defaults to ***0***.

14 **Delay In Paying Office Receipt Of: A: Receiving Report** *(optional default, numeric field; 8 positions)*. Key in the number of interest penalties incurred due to a delay in the paying office receipt of the receiving report. If left blank, the system defaults to ***0***.

15 **Delay By Paying Office In: A: Taking Discount** *(optional default, numeric field; 8 positions)*. Key in the number of interest penalties incurred due to a delay by the paying office in taking the discount. If left blank, the system defaults to ***0***.

16 **Delay In Paying Office Receipt Of: B: Proper Invoice** *(optional default, numeric field; 8 positions)*. Key in the number of interest penalties incurred due to a delay in the paying office receipt of the invoice. If left blank, the system defaults to ***0***.

17 **Delay By Paying Office In: B: Notifying Vendor** *(optional default, numeric field; 8 positions)*. Key in the number of interest penalties incurred due to a delay by the paying office in notifying the vendor of a defective invoice. If left blank, the system defaults to ***0***.

18 **Delay In Paying Office Receipt Of: C: PO or Contract** *(optional default, numeric field; 8 positions)*. Key in the number of interest penalties incurred due to a delay in the paying office receipt of the purchase order or contract. If left blank, the system defaults to ***0***.

19 **Delay By Paying Office In: C: System Processing** *(optional default, numeric field; 8 positions)*. Key in the number of interest penalties incurred due to a delay by the paying office because of system processing. If left blank, the system defaults to ***0***.

20 **Interest Due But Not Paid – < $1.00** (**Amount**) *(optional default, numeric field; 18 positions)*. Key in the total dollar amount not paid because the amount of interest was less than a dollar. If left blank, the system defaults to ***0***.

21 **Interest Due But Not Paid – < $1.00** (**Number**) *(optional default, numeric field; 8 positions)*. Key in the number of interest penalties not paid because the amount of interest was less than a dollar. If left blank, the system defaults to ***0***.

22 **(Interest Due But Not Paid) – Other** (**Amount**) *(optional default, numeric field; 18 positions)*. Key in the total dollar amount not paid for other reasons. If left blank, the system defaults to ***0***.

23 **(Interest Due But Not Paid) – Other** (**Number**) *(optional default, numeric field; 8 positions)*. Key in the number of interest penalties not paid for other reasons. If left blank, the system defaults to ***0***.

24 **Inv Paid 1 To 15 Days After Due Date** (**Amount**) *(optional default, numeric field; 18 positions)*. Key in the total dollar amount paid 1 to 15 days after the due date. If left blank, the system defaults to ***0***.

25 **Inv Paid 1 To 15 Days After Due Date** (**Number**) *(optional default, numeric field; 8 positions)*. Key in the number of invoices paid 1 to 15 days after the due date. If left blank, the system defaults to ***0***.

26 **Inv Paid 8+ Days Before Due – Approved** (**Amount**) *(optional default, numeric field; 18 positions)*. Key in the total dollar amount paid 8 or more days before the due date with the approval of the agency head. If left blank, the system defaults to ***0***.

27 **Inv Paid 8+ Days Before Due – Approved** (**Number**) *(optional default, numeric field; 8 positions)*. Key in the number of invoices paid 8 or more days before the due date with the approval of the agency head. If left blank, the system defaults to ***0***.

28 **(Inv Paid 8+ Days Before Due) – Not Approved** (**Amount**) *(optional default, numeric field; 18 positions)*. Key in the total dollar amount paid 8 or more days before the due date without the approval of the agency head. If left blank, the system defaults to ***0***.

29 **(Inv Paid 8+ Days Before Due) – Not Approved** (**Number**) *(optional default, numeric field; 18 positions)*. Key in the number of invoices paid 8 or more days before the due date without the approval of the agency head. If left blank, the system defaults to ***0***.

After keying in the data, press [Enter]. All records (lines) that are error-free or tagged with warning messages are added; records that contain either overrideable or fatal errors are not added. The message *All Lines Added* is displayed at the bottom of the screen to indicate that all or some records have been added; if any records contain errors, error messages are also displayed. For more information about error messages and correcting errors, see **Part 2, System Edits**.

- To add another record, repeat the above process.

Performing Other Actions. For instructions on displaying, changing, and deleting a record, or performing any other action, see **Part 2, Using Tables**.

Prompt Pay Summary Table – Screen 2 (PPS2)

The PPS2 is used to change information for the second part of the Prompt Payment Report.

Note: This table is updated by the PPST. Records cannot be added or deleted at this table. Records may be displayed or changed and only the optional or optional default fields may be changed.

To access the PPS2, at the FFS screen, key in ***N*** at the Action field and ***PPS2*** at the TableID field, then press [Enter]. The PPS2 screen (**Figure 8:62**) is displayed with an ***S*** in the Action field.

Instructions for changing are discussed below.

Note: If you are not authorized to perform a specific processing action (changing a record) in this table, contact your Functional Administrator responsible for Table Maintenance.

Changing A Record. At the PPS2 screen, complete the fields as follows:

[1] **Action** *(required, alpha field; 1 position)*. Key in ***C***.

[2] **TableID** *(no-entry)*. Displays ***PPS2***.

[3] **UserID** *(no-entry)*. Displays the user ID.

[4] **FY/FQ** 🔑 *(required, numeric field; 3 positions)*. Key in the fiscal year and quarter in which the invoices in this report were paid.

[5] **D.O.** 🔑 *(optional, alphanumeric field; 4 positions)*. Key in the code number of the Treasury disbursing office by which the invoices in this report were paid.

[6] **Discounts Available (Number)** *(optional default, numeric field; 8 positions)*. Key in the total number of discounts available during this fiscal year and quarter. If left blank, the system defaults to ***0***.

[7] **Discounts Taken (Number)** *(optional default, numeric field; 8 positions)*. Key in the total number of discounts taken during this fiscal year and quarter. If left blank, the system defaults to ***0***.

[8] **Discounts Not Taken Because Not Economically Justified (Number)** *(optional default, numeric field; 8 positions)*. Key in the total number of discounts not taken because they were not economically justified. If left blank, the system defaults to ***0***.

Note: Fields [9] through [13] display the number of **Discounts Lost Reason Codes**.

[9] **Delay In Paying Office Receipt Of: A: Receiving Report** *(optional default, numeric field; 8 positions)*. Key in the number of discounts lost due to a delay in the paying office receipt of the receiving report. If left blank, the system defaults to ***0***.

[10] **Delay By Paying Office In: A: Notifying Vendor** *(optional default, numeric field; 8 positions)*. Key in the number of discounts lost due to a delay by the paying office in notifying the vendor of a defective invoice. If left blank, the system defaults to ***0***.

```
ACTION: S [1] TABLEID: PPS2 [2] USERID: NFxx [3]
            *** PROMPT PAY SUMMARY TABLE --- SCREEN 2 ***
KEY IS FY / FQ, D.O.

FY / FQ: [4]     D.O.: [5]
                                          NUMBER
                                         --------
DISCOUNTS AVAILABLE:                       [6]
DISCOUNTS TAKEN:                           [7]
DISCOUNTS NOT TAKEN BECAUSE NOT
  ECONOMICALLY JUSTIFIED:                  [8]

                  --- DISCOUNTS LOST REASON CODES ---

DELAY IN PAYING OFFICE RECEIPT OF:     DELAY BY PAYING OFFICE IN :
A: RECEIVING REPORT    [9]             A: NOTIFYING VENDOR   [10]
B: PROPER INVOICE      [11]            B: SYSTEM PROCESSING  [12]
C: PO OR CONTRACT      [13]
```

Figure 8:62. Prompt Pay Summary Table – Screen 2 (PPS2)

11 **Delay In Paying Office Receipt Of: B: Proper Invoice** *(optional default, numeric field; 8 positions)*. Key in the number of discounts lost due to a delay in the paying office receipt of the invoice. If left blank, the system defaults to ***0***.

12 **Delay By Paying Office In: B: System Processing** *(optional default, numeric field; 8 positions)*. Key in the number of discounts lost due to a delay by the paying office because of system processing. If left blank, the system defaults to ***0***.

13 **Delay In Paying Office Receipt Of: C: PO Or Contract** *(optional default, numeric field; 8 positions)*. Key in the number of discounts lost due to a delay in the paying office receipt of the purchase order or contract. If left blank, the system defaults to ***0***.

After keying in the data, press [Enter]. All records (lines) that are error-free or tagged with warning messages are changed; records that contain either overrideable or fatal errors are not changed. The message *All Lines Changed* is displayed at the bottom of the screen to indicate that all or some records have been changed; if any records contain errors, error messages are also displayed. For more information about error messages and correcting errors, see **Part 2, System Edits**.

- To change another record, repeat the above process.

Performing Other Actions. For instructions on displaying a record or performing any other action, see **Part 2, Using Tables**.

Prompt Pay Summary Table – Screen 3 (PPS3)

The PPS3 is used to change information for the third part of the Prompt Payment Report.

Note: This table is updated by the PPST. Records cannot be added or deleted at this table. Records may be displayed or changed.

To access the PPS3, at the FFS screen, key in ***N*** at the Action field and ***PPS3*** at the TableID field, then press [Enter]. The PPS3 screen (**Figure 8:63**) is displayed with an ***S*** in the Action field.

Instructions for changing fields are discussed below.

Note: If you are not authorized to perform a specific processing action (changing a record) in this table, contact your Functional Administrator responsible for Table Maintenance.

Changing A Record. At the PPS3 screen, complete the fields as follows:

[1] **Action** *(required, alpha field; 1 position)*. Key in ***C***.

[2] **TableID** *(no-entry)*. Displays ***PPS3***.

[3] **UserID** *(no-entry)*. Displays the user ID.

[4] **FY/FQ** 🔑 *(required, numeric field; 3 positions)*. Key in the fiscal year and quarter in which the invoices in this report were paid.

[5] **D.O.** 🔑 *(optional, alphanumeric field; 4 positions)*. Key in the code number of the Treasury disbursing office by which the invoices in this report were paid.

Note: Fields [6] through [17] display the amount and number of **Interest Penalties Paid**.

[6] **Amount Of Penalty $1.00 – $25.00 (Amount)** *(optional default, numeric field; max. of 26 positions)*. Key in the total dollar amount of interest penalties paid that were in this dollar range. If left blank, the system defaults to ***0***.

[7] **Amount Of Penalty $1.00 – $25.00 (Number)** *(optional default, numeric field; max. of 26 positions)*. Key in the total number of interest penalties paid that were in this dollar range. If left blank, the system defaults to ***0***.

[8] **Amount Of Penalty $25.01 – $500.00 (Amount)** *(optional default, numeric field; max. of 26 positions)*. Key in the total dollar amount of interest penalties paid that were in this dollar range. If left blank, the system defaults to ***0***.

[9] **Amount Of Penalty $25.01 – $500.00 (Number)** *(optional default, numeric field; max. of 26 positions)*. Key in the total number of interest penalties paid that were in this dollar range. If left blank, the system defaults to ***0***.

[10] **Amount Of Penalty $500.01 – $1,000.00 (Amount)** *(optional default, numeric field; max. of 26 positions)*. Key in the total dollar amount of interest penalties paid that were in this dollar range. If left blank, the system defaults to ***0***.

ACTION: S [1] TABLEID: PPS3 [2] USERID: NFxx [3]
*** PROMPT PAY SUMMARY TABLE --- SCREEN 3 ***
KEY IS FY / FQ, D.O.

FY / FQ: [4] D.O.: [5]

INTEREST PENALTIES PAID

AMOUNT OF PENALTY	AMOUNT	NUMBER
$1.00 – $25.00	[6]	[7]
$25.01 – $500.00	[8]	[9]
$500.01 – $1,000.00	[10]	[11]
$1,000.01 – $2,500.00	[12]	[13]
$2,500.01 – $5,000.00	[14]	[15]
$5,000.01 +	[16]	[17]

Figure 8:63. Prompt Pay Summary Table – Screen 3 (PPS3)

11 **Amount Of Penalty $500.01 – $1,000.00 (Number)** *(optional default, numeric field; max. of 26 positions)*. Key in the total number of interest penalties paid that were in this dollar range. If left blank, the system defaults to ***0***.

12 **Amount Of Penalty $1,000.01 – $2,500.00 (Amount)** *(optional default, numeric field; max. of 26 positions)*. Key in the total dollar amount and number of interest penalties paid that were in this dollar range. If left blank, the system defaults to ***0***.

13 **Amount Of Penalty $1,000.01 – $2,500.00 (Number)** *(optional default, numeric field; max. of 26 positions)*. Key in the total number of interest penalties paid that were in this dollar range. If left blank, the system defaults to ***0***.

14 **Amount Of Penalty $2,500.01 – $5,000.00 (Amount)** *(optional default, numeric field; max. of 26 positions)*. Key in the total dollar amount of interest penalties paid that were in this dollar range. If left blank, the system defaults to ***0***.

15 **Amount Of Penalty $2,500.01 – $5,000.00 (Number)** *(optional default, numeric field; max. of 26 positions)*. Key in the total number of interest penalties paid that were in this dollar range. If left blank, the system defaults to ***0***.

16 **Amount Of Penalty $5,000.01 + (Amount)** *(optional default, numeric field; max. of 26 positions)*. Key in the total dollar amount of interest penalties paid that were in this dollar range. If left blank, the system defaults to ***0***.

17 **Amount Of Penalty $5,000.01 + (Number)** *(optional default, numeric field; max. of 26 positions)*. Key in the total number of interest penalties paid that were in this dollar range. If left blank, the system defaults to ***0***.

After keying in the data, press [Enter]. All records (lines) that are error-free or tagged with warning messages are changed; records that contain either overrideable or fatal errors are not changed. The message *All Lines Changed* is displayed at the bottom of the screen to indicate that all or some records have been changed; if any records contain errors, error messages are also displayed. For more information about error messages and correcting errors, see **Part 2, System Edits**.

- To change another record, repeat the above process.

Performing Other Actions. For instructions on displaying a record or performing any other action, see **Part 2, Using Tables**.

PRCH To FFIS Vendor Cross Reference Table (PRXT)

The PRXT is used by the PRCH-FFIS interface identify vendors and their payment addresses by the PRCH Purchase Order Number. PRCH -FFIS interface uses the PRXT to cross reference a PRCH purchase order number to an FFIS vendor code. Each unique purchase order must be established on the PRXT to be properly cross referenced to an FFIS vendor code by the interface.

A record must be added to the PRXT each time a new purchase order is established in PRCH. The PRXT record must be entered with the PRCH purchase order number and associated FFIS vendor code. The FFIS vendor code entered must be valid on the VEND.

If the vendor code is not found on the VEND, then the vendor code must be established on the VEND before being entered onto the PRXT.

The PRXT is to be keyed by PRCH purchase order number and include the FFIS Vendor Code, Vendor Name, and Vendor Address result fields.

If a valid FFIS vendor code from the PRXT is used on a document, both the Vendor Name and Vendor Address fields will be overridden by the vendor name and address information derived for the VEND.

If a PRCH purchase order number and FFIS vendor code record cannot be found on the PRXT, the interface will put spaces in the FFIS Document Vendor Code field and subsequently reject the document onto the SUSF. In this case, the vendor name and address from the supplemental record will be used to provide preliminary information to research and track the proper PRCH vendor.

To access the PRXT, at the FFS screen key in ***N*** at the Action field and ***PRXT*** at the TableID field, then press [Enter]. The ***PRXT*** screen (**Figure 8:64**) is displayed with an ***S*** in the Action field.

Instructions for adding are discussed below.

Note: If you are not authorized to perform a specific processing action (adding, changing, or deleting a record) in this table, contact your Functional Administrator responsible for Table Maintenance.

Adding A Record. At the PRXT screen, complete the fields as follows:

[1] **Action** *(required, alpha field; 1 position)*. Key in ***A***.

[2] **TableID** (*no-entry*). Displays ***PRXT***.

[3] **UserID** (*no-entry*). Displays the user ID.

[4] **PRCH PO Number** 🔑 *(required, alphanumeric field; 12 positions)*. Key in the PRCH purchase order number.

[5] **FFIS Vendor Code** *(required, alphanumeric field; 11 positions)* Key in the vendor code. See the VEND for valid vendor codes.

[6] **FFIS Vendor Name** (*no-entry*). Displays the vendor name.

[7] **FFIS Addr Line 1** (*no-entry*). Displays the first line of the address.

[8] **FFIS Addr Line 2** (*no-entry*). Displays the the second line of the address.

```
ACTION: S [1]  TABLEID: PRXT [2] USERID: NFxx   [3]
PRCH TO FFIS VENDOR CROSS REFERENCE
KEY IS PRCH PO NUMBER

  PRCH PO NUMBER:   [4]
FFIS VENDOR CODE:   [5]
FFIS VENDOR NAME:   [6]
FFIS ADDR LINE 1:   [7]
               2:   [8]
               3:   [9]

  PRCH PO NUMBER:
FFIS VENDOR CODE:
FFIS VENDOR NAME:
FFIS ADDR LINE 1:
               2:
               3:
```

Figure 8:64. PRCH To FFIS Vendor Cross Reference Table (PRXT)

9 **FFIS Addr Line 3** (*no-entry*). Displays the third line of the address.

After keying in the data, press [Enter]. All records (lines) that are error-free or tagged with warning messages are added; records that contain either overrideable or fatal errors are not added. The message *All Lines Added* is displayed at the bottom of the screen to indicate that all or some records have been added; if any records contain errors, error messages are also displayed. For more information about error messages and correcting errors, see **Part 2, System Edits**.

- To add another record, repeat the above process.

Performing Other Actions. For instructions on displaying, changing, and deleting a record, or performing any other action, see **Part 2, Using Tables**.

Revenue Category Reference Table (RCAT)

The RCAT is used to define revenue category codes used to group similar revenue sources. Grouping of revenue sources into categories occurs in the RSRC.

To access the RCAT, at the FFS screen, key in ***N*** at the Action field and ***RCAT*** at the TableID field, then press [Enter]. The RCAT screen (**Figure 8:65**) is displayed with an ***S*** in the Action field.

Instructions for adding are discussed below.

Note: If you are not authorized to perform a specific processing action (adding, changing, or deleting a record) in this table, contact your Functional Administrator responsible for Table Maintenance.

Adding A Record. At the RCAT screen, complete the fields as follows:

[1] **Action** *(required, alpha field; 1 position)*. Key in ***A***.

[2] **TableID** (*no-entry*). Displays ***RCAT***.

[3] **UserID** (*no-entry*). Displays the user ID.

[4] **BFY** 🔑 *(required, numeric field; 2 positions)*. Key in the last 2 digits of the budget fiscal year.

[5] **Revenue Category** 🔑 *(required, alphanumeric field; 2 positions)*. Key in a code used to define the revenue category.

[6] **Rev Category Name** *(optional, alphanumeric field; max. of 30 positions)*. Key in the revenue category name used on reports.

[7] **Short Name** *(optional, alphanumeric field; max. of 12 positions)*. Key in the name to appear on reports when there is not enough room for the full revenue category name.

After keying in the data, press [Enter]. All records (lines) that are error-free or tagged with warning messages are added; records that contain either overrideable or fatal errors are not added. The message *All Lines Added* is displayed at the bottom of the screen to indicate that all or some records have been added; if any records contain errors, error messages are also displayed. For more information about error messages and correcting errors, see **Part 2, System Edits**.

- To add another record, repeat the above process.

Performing Other Actions. For instructions on displaying, changing, and deleting a record, or performing any other action, see **Part 2, Using Tables**.

```
ACTION: S [1]   TABLEID: RCAT [2]   USERID: NFxx [3]
REVENUE CATEGORY REFERENCE TABLE
KEY IS BFY, REVENUE CATEGORY

      BFY     REVENUE CATEGORY        REV CATEGORY NAME          SHORT NAME
   ---------  ----------------  ------------------------------  ------------
01-
02-    [4]          [5]                    [6]                     [7]
03-
04-
05-
06-
07-
08-
09-
10-
11-
12-
13-
14-
15-
```

Figure 8:65. Revenue Category Reference Table (RCAT)

Revenue Class Reference Table (RCLS)

The RCLS is used to define revenue class codes used to group similar revenue sources. Grouping of revenue sources into revenue classes occurs in the RSRC.

To access the RCLS, at the FFS screen, key in ***N*** at the Action field and ***RCLS*** at the TableID field, then press [Enter]. The RCLS screen (**Figure 8:66**) is displayed with an ***S*** in the Action field.

Instructions for adding are discussed below.

Note: If you are not authorized to perform a specific processing action (adding, changing, or deleting a record) in this table, contact your Functional Administrator responsible for Table Maintenance.

Adding A Record. At the RCLS screen, complete the fields as follows:

[1] **Action** *(required, alpha field; 1 position)*. Key in ***A***.

[2] **TableID** (*no-entry*). Displays ***RCLS***.

[3] **UserID** (*no-entry*). Displays the user ID.

[4] **BFY** *(required, numeric field; 2 positions)*. Key in the last 2 digits of the budget fiscal year.

[5] **Revenue Class** *(required, alphanumeric field; 3 positions)*. Key in a code used to define the revenue class.

[6] **Revenue Class Name** *(optional, alphanumeric field; max. of 30 positions)*. Key in the revenue class name used on reports.

[7] **Short Name** *(optional, alphanumeric field; max. of 12 positions)*. Key in the name to appear on reports when there is not enough room for the full revenue class name.

After keying in the data, press [Enter]. All records (lines) that are error-free or tagged with warning messages are added; records that contain either overrideable or fatal errors are not added. The message *All Lines Added* is displayed at the bottom of the screen to indicate that all or some records have been added; if any records contain errors, error messages are also displayed. For more information about error messages and correcting errors, see **Part 2, System Edits**.

- To add another record, repeat the above process.

Performing Other Actions. For instructions on displaying, changing, and deleting a record, or performing any other action, see **Part 2, Using Tables**.

```
ACTION: S [1]  TABLEID: RCLS [2]   USERID: NFxx  [3]
REVENUE CLASS REFERENCE TABLE
KEY IS BFY, REVENUE CLASS

       BFY      REVENUE CLASS      REVENUE CLASS NAME         SHORT NAME
    ----------- ------------- ------------------------------ ------------
01-    [4]          [5]                  [6]                      [7]
02-
03-
04-
05-
06-
07-
08-
09-
10-
11-
12-
13-
14-
15-
```

Figure 8:66. Revenue Class Reference Table (RCLS)

Recurring Journal Voucher And Standard Voucher Data Entry Table (REJV)

The REJV and SV are used to set up Journal and Standard vouchers that recur on a regular schedule (e.g., monthly, or annually) and are standard in terms of their content.

To access the REJV, at the FFS screen, key in ***N*** at the Action field and ***REJV*** at the TableID field, then press [Enter]. The REJV screen (**Figure 8:67**) is displayed with an ***S*** in the Action field.

Instructions for adding are discussed below.

Note: If you are not authorized to perform a specific processing action (adding, changing, or deleting a record) in this table, contact your Functional Administrator responsible for Table Maintenance.

Adding A Record. At the REJV screen, complete the fields as follows:

[1] **Action** *(required, alpha field; 1 position)*. Key in ***A***.

[2] **TableID** (*no-entry*). Displays ***REJV***.

[3] **UserID** (*no-entry*). Displays the user ID.

[4] **Trans Code** 🔑 *(required, numeric field; 2 positions)*. Key in the transaction code for the document being processed.

[5] **Number** 🔑 *(required, numeric field; 9 positions)*. Key in the document number to be used when the document is generated.

[6] **Division** *(required, numeric field; 2 positions)*. Key in the division code. See DVSN for valid division codes.

[7] **Freq Type** *(required, alpha field; 1 position)*. Key in one of the following to indicate how often the document should be generated:

- ***F*** = One time future document
- ***M*** = Monthly document
- ***B*** = Bimonthly document
- ***Q*** = Quarterly document
- ***A*** = Annual document

[8] **Budget FYs** *(optional, numeric field; 2 positions)*. Key in the budget fiscal year associated with this accounting line.

[9] **Fund** *(optional, numeric field; max. of 3 positions)*. Key in the code of the fund to be associated with all lines of this document in which fund code is not entered. See FUND for valid fund codes.

[10] **Reversal Ind** *(optional, alpha field; 1 position)*. Key in ***Y*** if this is to be a self-reversing JV or SV. Otherwise, leave blank.

[11] **Budget Override Ind** *(optional, alpha field; 1 position)*. Key in ***Y*** if spending control checks are to become less stringent. Otherwise, leave blank.

[12] **Description** *(optional, alpha field; 1 position)*. Key in a description of the transaction.

```
 ACTION:[1]  TABLEID:[2]   USERID:[3]
 RECURRING JOURNAL VOUCHER AND STANDARD VOUCHER DATA ENTRY TABLE
 KEY IS TRANS CODE, NUMBER, LINE
  TRANS CODE: [4]  NUMBER: [5]          DIVISION: [6]          FREQ TYPE: [7]
BUDGET FYS:   [8]  FUND:   [9]    REVERSAL IND: [10]  BUDGET OVERRIDE IND: [11]
 DESCRIPTION: [12]                                  EXP/REV/GL/BUD IND: [13]
 ENTRY START DATE: [14]        ENTRY END DATE: [15]       LATEST DATE: [16]

 LINE: [17]  TRANS TYPE: [18]    ACCT TYPE: [19]          EXP/REV/GL/BUD IND: [20]
     GL ACCOUNT: [21]            BUDGET FY: [22]           FUND: [23]      DIV: [24]
 BUDGET ORG/SUB: [25] [26]    COST ORG/SUB: [27] [28]    PROGRAM: [29]
 BOC/REV SOURCE: [30]     SUB BOC/SUB SRCE: [31] JOB: [32]          RPTG: [33]
 VENDOR: [34]          NAME: [35]                          QUANT: [36]
 SCHD FISC YR: [37]  SCHD CAT:[38] SCHD TYPE:[39]   SCHD NO:[40]
 D.O.: [41]        GUEST SYMBOL:[42]
 REF TRANS ID: [43]              REF DOC TYPE: [44]      OBLIGATION FY: [45]
 INVOICE NO:   [46]       INVOICE DATE: [47]      INVOICE LINE: [48]
 AMOUNT: [49]              DEBIT/CREDIT: [50] INC/DEC IND: [51]
 DESCRIPTION:  [52]
 ACCOMP DATE:  [53]            TREAS NO: [54]
 AGREEMENT #:  [55]                                  ADV FLAG: [56]
```

Figure 8:67. Recurring Journal Voucher and Standard Voucher Data Entry Table (REJV)

13 **Exp/Rev/GL Bud Ind** *(optional, alpha field; 1 position).* Key in one of the following to indicate the type of event for this transaction:

E = Expense
R = Revenue
G = General Ledger

Note: These entries are not valid for JVs.

14 **Entry Start Date** *(required, numeric field; 6 positions)*. Key in the earliest date (*mm/dd/yy*) on which the recurring document should be generated.

15 **Entry End Date** *(conditional, numeric field; 6 positions)*. If the frequency type is *M, B, Q,* or *A,* key in the date (*mm/dd/yy*) on which the recurring document should be generated. Otherwise, leave blank.

16 **Latest Date** *(no entry).* Displays each time a recurring document is created; the latest date ID updated by the system.

17 **Line** 🔑 *(required, numeric field, 3 positions).* Key in a different number for each line from 001 to 999.

18 **Trans Type** *(optional, numeric field; 2 positions).* Key in the transaction type describing the accounting events that should be recorded for this line.

19 **Acct Type** *(conditional, numeric field; 2 positions).* Key in the account type for the General Ledger account in this line. **Note**: This field must be left blank for SVs.

20 **Exp/Rev/GL/Bud Ind** *(conditional, alpha field; 1 position).* If the document is a SV, key in one of the following to indicate the type of event for this transaction:

E = Expense
R = Revenue
G = General Ledger
B = Budget

Note: If the document is a JV, these entries are not valid.

21 **GL Account** *(conditional, numeric field; 4 positions).* If the document is a JV key in the GL account appropriate for this line. Otherwise, leave blank.

22 **Budget FY** *(optional, numeric field; 2 positions).* Key in the budget fiscal year associated with this accounting line.

23 **Fund** *(conditional, alphanumeric field; max. of 3 positions).* If the fund is not entered in the header, key in the fund code to be associated with this transaction. Otherwise, optional.

24 **Div** *(optional, numeric field; 2 positions).* Key in the division code to be associated with this transaction.

25 **(Budget) Org** *(conditional, numeric field; 5 positions).* If the transaction affects spending or revenue budgets, key in the code of the organization responsible for the budget associated with the transaction. Otherwise, leave blank.

26 **(Budget) Sub** *(optional, numeric field; 2 positions).* Key in the suborganization code associated with the budget organization.

27 **(Cost) Org** *(conditional, numeric field; 5 positions).* If the cost is to be charged to an account other than the organization for which the budget is established, key in the code of the organization responsible for the event associated with this transaction. Otherwise, leave blank.

28 **(Cost) Sub** *(optional, numeric field; 2 positions).* Key in the suborganization code associated with the cost organization.

29 **Program** *(conditional, alphanumeric field; 9 positions).* If required by the controls specified for the referenced allotment, key in the program code to be associated with this transaction. Otherwise, optional.

30 **BOC/Rev Source** *(conditional, numeric field; 4 positions).* If required by the account type, key in the budget object code or revenue source code to be associated with this transaction. Otherwise, optional.

31 **Sub BOC/Sub Srce** *(optional, numeric field; 2 positions).* Key in the subobject code or sub revenue source code to be associated with this transaction.

32 **Job** *(optional, numeric field; 8 positions).* Key in the job number to be associated with the transaction.

33 **Rptg** *(optional, numeric field; 2 positions).* Key in the reporting category code to be associated with this transaction.

34 **Vendor** *(optional, alphanumeric field; 11 positions).* Key in the code of the vendor to be associated with this transaction.

35 **Name** *(conditional, alphanumeric field; 30 positions).* If a vendor code is not specified, key in the vendor's name. Otherwise, leave blank.

36 Quant *(optional, numeric field; 9 positions).* Key in the number of units associated with this transaction.

37 Schd Fisc Yr *(optional; numeric field; 2 positions).* Key in the fiscal year associated with this payment schedule document.

38 Schd Cat *(optional, alpha field; 1 position).* Key in one of the following codes to indicate which payment method was used for disbursement of this payment document:

T = Automated Tape Schedule
M = Manual SF–1166
A = ACH Tape
S = TFCS SF–1166

39 Schd Type *(optional, alpha field; 1 position).* Key in one of the following schedule types:

M = Miscellaneous
T = Transportation

40 Schd No *(optional; numeric field; 9 positions).* Key in the agency schedule number for the transaction being entered.

41 D.O. *(optional, numeric field; 4 positions).* Key in the disbursing office code for the transaction being entered.

42 Guest Symbol *(conditional, numeric field; 15 positions).* If the transaction affect interagency transfers, key in the Treasury symbol. Otherwise, leave blank.

43 Ref Trans ID *(conditional, alphanumeric field; 16 positions).* It this transaction relates to another FFIS transaction, key in the reference document. Otherwise, leave blank.

44 Ref Doc Type *(conditional, alpha field; 1 position).* If a reference transaction was entered, key in the document type associated with that reference document. Otherwise, leave blank.

45 Obligation FY *(conditional, numeric field; 2 positions).* If this document is recovering funds from a previous year, key in the year that the obligation was incurred. Otherwise, leave blank.

46 Invoice No *(conditional, alphanumeric field; 11 positions).* If this transaction references a vendor invoice, key in the invoice number. Otherwise, leave blank.

47 Invoice Date *(conditional, numeric field; 6 positions).* If this transaction references a vendor invoice, key in the invoice date (*mm/dd/yy*). Otherwise, leave blank.

48 Invoice Line *(conditional, numeric field; 3 positions).* If this transaction references a vendor invoice, key in the invoice line.

49 Amount *(optional,, numeric field; 15 positions).* Key in the dollar amount of the item described in this line.

50 Debit/Credit *(optional, alpha field; 1 position).* Key in one of the following to indicate whether this transaction is a credit or debit:

C = credit
D = debit

51 Inc/Dec Ind *(optional default, alpha field; 1 position).* Key in one of the following if making an adjustment:

D = decrease
I = increase

If left blank, the system defaults to ***I***.

52 Description *(optional, alphanumeric field; max. of 30 positions).* Key in a description of the transaction.

53 Accomp Date *(optional, numeric field: 6 positions).* Key in the accomplished date (*mm/dd/yy*) of the transaction.

54 Treas No *(optional, numeric field; max. of 11 positions).* Key in the Treasury number of the transaction.

55 Agreement # *(conditional, alphanumeric field; max. of 15 positions).* If the voucher should use the CTYP to determine the accounting event, or if the Job Cost Option in SOPT is *Y,* key in an agreement number.

56 Adv Flag *(conditional, alpha field; 1 position).* Key in one of the following:

N = Nonadvance
A = Advance
U = Advance used

Note: This entry is not valid in JVs.

After keying in the data, press [Enter]. All records (lines) that are error-free or tagged with warning

messages are added; records that contain either overrideable or fatal errors are not added. The message *All Lines Added* is displayed at the bottom of the screen to indicate that all or some records have been added; if any records contain errors, error messages are also displayed. For more information about error messages and correcting errors, see **Part 2, System Edits.**

- To add another record, repeat the above process.

Performing Other Actions. For instructions on displaying, changing, and deleting a record, or performing any other action, see **Part 2, Using Tables**.

Recurring Payment Voucher Data Entry Table (REPV)

The REPV is used to provide information that the system uses to automatically create payment voucher transactions on a regular basis (e.g., for monthly rent payments).

Note: When entering information, many fields are optional. When the created payment voucher is actually processed, these fields may be required. Once Payment Voucher document header information is entered into the REPV, it cannot be changed. To change the entry, either delete it and re-add it, or modify the created payment voucher before it is processed.

To access the REPV, at the FFS screen, key in ***N*** at the Action field and ***REPV*** at the TableID field, then press [Enter]. The REPV screen (**Figure 8:68**) is displayed with an ***S*** in the Action field.

Instructions for adding are discussed below.

Note: If you are not authorized to perform a specific processing action (adding, changing, or deleting a record) in this table, contact your Functional Administrator responsible for Table Maintenance.

Adding A Record. At the REPV screen, complete the fields as follows:

[1] **Action** *(required, alpha field; 1 position)*. Key in ***A***.

[2] **TableID** (*no-entry*). Displays ***REPV***.

[3] **UserID** (*no-entry*). Displays the user ID.

[4] **Trans Code** 🔑 *(required, alphanumeric field; 2 positions)*. Key in the transaction code ***PV***.

[5] **PV Num** 🔑 *(required, alphanumeric field; 9 positions)*. Key in the code for this PV. It becomes the first 9 digits of the document number of the generated documents. The last 2 digits are the month from the to-date parameter.

Note: Use the following document numbering scheme (e.g., *06056XXXX*). **Positions 1–4** represent the agency and division; **position 5** represents the fiscal year; and **positions 6–9** can be any unique combination.

[6] **Subm Div** *(required, alphanumeric field; 4 positions)*. Key in the code that you want to have as the division in the document ID of the generated document. **Note:** This division must be valid for the entry start date's year.

[7] **Freq Type** *(required, alpha field; 1 position)*. Key in one of the following to specify how often the document should be generated and added to the SUSF:

- ***F*** = One time future document
- ***M*** = Monthly document
- ***B*** = Bimonthly document
- ***Q*** = Quarterly document
- ***A*** = Annual document

[8] **D.O.** *(optional, alphanumeric field; max. of 4 positions)*. Key in the Treasury Disbursing office that pays this voucher.

```
ACTION: S [1] TABLEID: REPV [2]  USERID: NFxx [3]
RECURRING PAYMENT VOUCHER DATA ENTRY TABLE
KEY IS TRANS CODE, PV NUM, LINE NO

TRANS CODE: [4] PV NUM: [5]          SUBM DIV: [6]   FREQ TYPE:[7] D.O: [8]
ENTRY START DATE: [9]          ENTRY END DATE: [10]        LATEST DATE: [11]
     VENDOR CODE: [12]             TRANS TYPE: [13]          VCHR TYPE: [14]
AGREEMENT NUMBER: [15]               FA IND: [16]          CHECK TYPE: [17]
 SCHEDULING TYPE: [18]       PROMPT PAY TYPE: [19]

LINE NO: [20]   REF DOC NO: [21]              REF DOC LINE: [22]
VENDOR INV #/LINE:[23]                 VENDOR INVOICE DATE: [24]
  TRANS TYPE: [25] BFY: [26]     FUND: [27]     BUDGET ORG/SUB: [28]
COST ORG/SUB: [29]            PROGRAM: [30]           BOC/SUB: [31]
  JOB NUMBER: [32]              RPTG: [33]        GL ACCOUNT: [34]
REV SRCE/SUB: [35]             DESCR: [36]
    QUANTITY: [37]            AMOUNT: [38]              I/D: [39] P/F: [40]
ADVANCE FLAG: [41]       VI LOG DATE: [42]         LINE TYPE: [43]
  DISCOUNT %: [44]         /  AMOUNT: [45]              DAYS: [46]
  DISCOUNT %:              /  AMOUNT:                   DAYS:
  DISCOUNT %:              /  AMOUNT:                   DAYS:
```

Figure 8:68. Recurring Payment Voucher Data Entry Table (REPV)

9 **Entry Start Date** *(required, numeric field; 6 positions)*. Key in the date (*mmddyy*) the first recurring payment voucher should be generated.

10 **Entry End Date** *(conditional, numeric field; 6 positions)*. If frequency type is ***M***, ***B***, ***A***, or ***Q***, key in the date (*mmddyy*) after which the recurring payment voucher should not be generated. Otherwise, leave blank.

11 **Latest Date** (*no-entry*). Displays the last time the recurring payment voucher was created.

12 **Vendor Code** *(required, alphanumeric field; 11 positions)*. Key in the code for the vendor to be paid. See the VNAM for valid vendor codes.

13 **Trans Type** *(required, alphanumeric field; 2 positions)*. Key in the transaction type code appropriate for the payment voucher. **Note:** This transaction type must be valid in the ACED.

14 **Vchr Type** *(optional, alphanumeric field; 1 position)*. Key in the voucher type code that corresponds to the payment voucher being created.

15 **Agreement Number** *(conditional, numeric field; 15 positions)*. If this payment is for a refund of a previous collection against a customer agreement, key in the agreement number of the over-collection.

16 **FA Ind** *(optional, alpha field; 1 position)*. Key in ***Y*** if this payment **is** for a fixed asset. Key in ***N*** if this payment **is not** for a fixed asset.

17 **Check Type** *(optional default, alpha field; 1 position)*. Key in one of the following:

- ***H*** = If this payment is a hand pick-up check and the vendor type is not an outside vendor.
- ***C*** = If this payment is contains a comment card. (Used only by Treasury-disbursing agencies.)
- ***S*** = If this payment is held before mailing for additional stuffing. (Used only agencies that print their own checks.)
- ***B*** = If this payment is both stuffed and picked up. (Used only by agencies that print their own checks.)

If left blank, the system defaults to blank.

18 **Scheduling Type** *(optional default, alpha field; 1 position)*. Key in one of the following:

- ***H*** = Held in the SUSF
- ***O*** = Offline processing

If left blank, the system defaults to ***O***.

19 **Prompt Pay Type** *(conditional, alphanumeric field; 1 position)*. If this voucher is subject to prompt pay, key in the prompt pay type associated with this voucher. **Note:** This prompt pay type must be valid in the PPAY.

20 **Line No** 🔑 *(required, numeric field; 3 positions)*. Key in the line number for the payment voucher (from ***001*** to ***999***).

21 **Ref Doc No** *(required, alphanumeric field; 13 positions)*. Key in the reference transaction code and document number for this voucher.

22 **Ref Doc Line** *(required, numeric field; 3 positions)*. Key in the line number of the referenced item.

23 **Vendor Inv #/Line** *(optional, numeric field; 23 positions)*. Key in the vendor invoice number in **positions 1–20**. Key in the line number in **positions 21 –23**.

24 **Vendor Invoice Date** *(optional, numeric field; 6 positions)*. Key in the invoice date from the vendor's invoice for the goods or services related to this document.

25 **Trans Type** *(optional, alphanumeric field; 2 positions)*. Key in the transaction type code appropriate for the payment voucher. If the transaction type was entered in **Field 13**, leave this field blank. **Note:** This transaction type must be valid in the ACED.

26 **BFY** *(optional, numeric field; 2 positions)*. Key in the last 2 digits of the fiscal year this document belongs in **positions 1–2**. Leave **positions 3–4** blank.

27 **Fund** *(optional, alphanumeric field; max. of 3 positions)*. Key in the fund this document belongs.

28 **Budget Org/Sub** *(conditional, alphanumeric field; 7 positions)*. If a reference document is not entered, key in the budget organization code in **positions 1–7**. Key in the suborganization code in **positions 8–9**.

29 **Cost Org/Sub** *(optional, alphanumeric field; 7 positions)*. Key in the cost organization code in **positions 1–7**. Key in the subcost code in **positions 8–9**.

30 **Program** *(optional, alphanumeric field; 9 positions)*. Key in the program code.

31 **BOC/Sub** *(optional, alphanumeric field; 6 positions)*. Key in the budget object code in **positions 1–4**. Key in the subobject code in **positions 5–6**.

32 **Job Number** *(conditional, numeric field; 8 positions)*. If this field references a prior document, key in

the job number from the prior document. If there was no job number entered, key in a job number.

33 **Rptg** *(optional, alphanumeric field; 2 positions)*. Key in the reporting category.

34 **GL Account** *(optional, alphanumeric field; 4 positions)*. Key in the General Ledger account appropriate for this line.

35 **Rev Srce/Sub** *(optional, alphanumeric field; 6 positions)*. Key in the revenue source in **positions 1–4**. Key in the sub revenue source in positions 5–6.

36 **Descr** *(optional, alphanumeric field; max. of 30 positions)*. Key in notes about this voucher.

37 **Quantity** *(optional, numeric field; max. of 9 positions)*. Key in the number of units being purchased with this voucher.

38 **Amount** *(required, numeric field; max. of 15 positions)*. Key in the dollar amount of this line, with an optional decimal point.

39 **I/D** *(optional, alpha field; 1 position)*. Key in one of the following:

I = Increase amount
D = Decrease amount

40 **P/F** *(conditional, alpha field; 1 position)*. If all three reference transaction fields are blank, leave this field blank. Otherwise, key in one of the following:

P = Partial payment
F = Final payment

41 **Advance Flag** *(optional, alpha field; 1 position)*. Key in one of the following:

A = Advance
N = Non-Advance

42 **VI Log Date** *(optional, numeric field; 6 positions)*. Key in the invoice log date. (This date is used in scheduling vouchers for payment.)

43 **Line Type** *(optional, alpha field; 1 position)*. Key in one of the following:

H = Contract holdback amount
N = Normal payment amount
I = Manually entered interest amount
P = Manually entered penalty amount

44 **Discount %** *(conditional, numeric field; max. of 6 positions)*. If a discount amount is entered, the discount % is not allowed. Key in the percentage of discount in whole percents with 3 decimal places.

45 **Discount Amount** *(conditional, numeric field; max. of 8 positions)*. If a discount percentage is entered, the discount amount is not allowed. Key in the amount of discount for this document.

46 **Discount Days** *(conditional, numeric field; 2 positions)*. If either a discount percent or amount is entered, key in the number of days the discount is applicable.

After keying in the data, press [Enter]. All records (lines) that are error-free or tagged with warning messages are added; records that contain either overrideable or fatal errors are not added. The message *All Lines Added* is displayed at the bottom of the screen to indicate that all or some records have been added; if any records contain errors, error messages are also displayed. For more information about error messages and correcting errors, see **Part 2, System Edits**.

- To add another record, repeat the above process.

Performing Other Actions. For instructions on displaying, changing, and deleting a record, or performing any other actions, see **Part 2, Using Tables**.

Report Literal Reference Table (RLIT)

The RLIT is used to store literal data that may be needed for one or more reports.

To access the RLIT, at the FFS screen, key in ***N*** at the Action field and ***RLIT*** at the TableID field, then press [Enter]. The RLIT screen (**Figure 8:69**) is displayed with an ***S*** in the Action field.

Instructions for adding are discussed below.

Note: If you are not authorized to perform a specific processing action (adding, changing, or deleting a record) in this table, contact your Functional Administrator responsible for Table Maintenance.

Adding A Record. At the RLIT screen, complete the fields as follows:

[1] **Action** *(required, alpha field; 1 position)*. Key in ***A***.

[2] **TableID** (*no-entry*). Displays ***RLIT***.

[3] **UserID** (*no-entry*). Displays the user ID.

[4] **Literal Name** 🔑 *(required, alphanumeric field; max. of 25 positions)*. Key in a name to identify the literal data that is stored in the record.

[5] **Value** *(optional, alphanumeric field; max. of 160 positions)*. Key in the literal line(s) used by the report(s).

After keying in the data, press [Enter]. All records (lines) that are error-free or tagged with warning messages are added; records that contain either overrideable or fatal errors are not added. The message *All Lines Added* is displayed at the bottom of the screen to indicate that all or some records have been added; if any records contain errors, error messages are also displayed. For more information about error messages and correcting errors, see **Part 2, System Edits**.

- To add another record, repeat the above process.

Performing Other Actions. For instructions on displaying, changing, and deleting a record, or performing any other action, see **Part 2, Using Tables.**

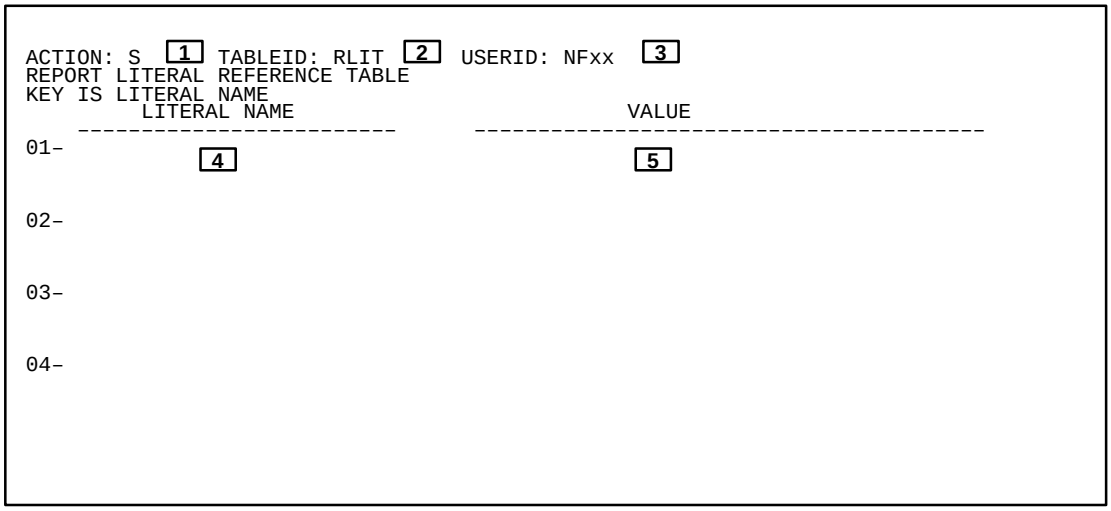

Figure 8:69. Report Literal Reference Table (RLIT)

Reporting Category Reference Table (RPTG)

The RPTG is used to define the general purpose reporting categories for individual divisions.

Note: The RPTG will function as an inquiry table for most RD's users. Only the Functional Administrator and Co-Administrator will have authority to add, modify, or delete records in the RPTG.

To access the RPTG, at the FFS screen, key in ***N*** at the Action field and ***RPTG*** at the TableID field, then press [Enter]. The RPTG screen (**Figure 8:70**) is displayed with an ***S*** in the Action field.

Displaying A Record. For instructions on displaying a record, see Part 2, Using Tables.

1 **Action**. Displays ***S***.

2 **TableID**. Displays ***RPTG***.

3 **UserID**. Displays the user ID.

4 **BFY**. Displays the budget fiscal year.

5 **Division**. Displays the division code.

6 **Reporting Category**. Displays the reporting category.

7 **Project**. Displays the project code.

8 **Description**. Displays the description for the reporting category.

After viewing the data, you have several options, as described below:

- To view another record, repeat the above process.
- To view another table, key in ***N*** at the Action field and the applicable table ID at the TableID field, then press [Enter].
- To access a document screen, key in ***L*** at the Action field and the applicable document transaction code at the TableID field. Use the [Space Bar] to erase the remaining 2 characters, then press [Enter].
- To exit the system, follow the sign-off instructions under Part 2, Accessing The System.

```
ACTION: S [1]   TABLEID: RPTG [2]   USERID: NFxx [3]
REPORTING CATEGORY REFERENCE TABLE
KEY IS BFY, DIVISION, REPORTING CATEGORY

                          REPORTING
      BFY      DIVISION   CATEGORY    PROJECT            DESCRIPTION
     ------    --------   ---------   -------   ------------------------------
01-   [4]        [5]        [6]         [7]                  [8]
02-
03-
04-
05-
06-
07-
08-
09-
10-
11-
12-
13-
14-
```

Figure 8:70. Reporting Category Reference Table (RPTG)

Revenue Source Reference Table (RSRC)

The RSRC is used to:

- Define revenue sources.
- Establish report groupings of the revenue source codes.
- Determine revenue source processing options.

To access the RSRC, at the FFS screen, key in ***N*** at the Action field and ***RSRC*** at the TableID field, then press [Enter]. The RSRC screen (**Figure 8:71**) is displayed with an ***S*** in the Action field.

Instructions for adding are discussed below.

Note: If you are not authorized to perform a specific processing action (adding, changing, or deleting a record) in this table, contact your Functional Administrator responsible for Table Maintenance.

Adding A Record. At the RPTG screen, complete the fields as follows:

[1] **Action** *(required, alpha field; 1 position)*. Key in ***A***.

[2] **TableID** (*no-entry*). Displays ***RSRC***.

[3] **UserID** (*no-entry*). Displays the user ID.

[4] **BFY** 🔑 *(required, numeric field; 2 positions)*. Key in the last 2 digits of the budget fiscal year.

[5] **Rev Source** 🔑 *(required, alphanumeric field; 4 positions)*. Key in a code used to define the revenue source.

[6] **Rev Source Name** *(optional, alphanumeric field; max. of 30 positions)*. Key in the revenue source name used for reporting purposes.

[7] **Rev Class** *(optional, alphanumeric field; 3 positions)*. Key in the code from the RCLS that best describes the revenue source being defined on this line.

[8] **Rev Category** *(optional, alphanumeric field; 2 positions)*. Key in the code from the RCAT that best describes the revenue source being defined on this line.

[9] **Rev Group** *(optional, alphanumeric field; 2 positions)*. Key in the code from the RGRP that best describes the revenue source being defined on this line.

[10] **Sub Rev Srce Option** *(optional default, alpha field; 1 position)*. Key in ***Y*** if you want a sub revenue source code to be required on documents when this revenue source is entered. If left blank, the system defaults to ***N***.

[11] **Off Bld Rec Acct** *(optional default, alphanumeric field; 4 positions)*. Key in the code of the General Ledger account that you want to debit when billed receivables for this revenue source are recognized. The code used must be valid in the GLAC and have an account type of ***01***. If left blank, the system defaults to the account determined by the Common Posting Routine.

```
ACTION: S [1]  TABLEID: RSRC [2]   USERID: NFxx [3]
REVENUE SOURCE REFERENCE TABLE
KEY IS BFY, REV SOURCE
01-
    BFY: [4]  REV SOURCE: [5]     REV SOURCE NAME: [6]
               REV CLASS: [7]        REV CATEGORY: [8]      REV GROUP: [9]
    SUB REV SRCE OPTION: [10]   OFF BLD REC ACCT: [11]
              SHORT NAME: [12]           ACT REIM: [13] REV SRCE POST: [14]
02-
    BFY:      REV SOURCE:         REV SOURCE NAME:
               REV CLASS:            REV CATEGORY:         REV GROUP:
    SUB REV SRCE OPTION:       OFF BLD REC ACCT:
              SHORT NAME:                ACT REIM:    REV SRCE POST:
03-
    BFY:      REV SOURCE:         REV SOURCE NAME:
               REV CLASS:            REV CATEGORY:         REV GROUP:
    SUB REV SRCE OPTION:       OFF BLD REC ACCT:
              SHORT NAME:                ACT REIM:    REV SRCE POST:
```

Figure 8:71. Revenue Source Reference Table (RSRC)

12 **Short Name** *(optional, alphanumeric field; max. of 12 positions)*. Key in the name to appear on reports when there is not enough room for the full revenue source name.

13 **Act Reim** *(optional default, alpha field; 1 position)*. Key in ***Y*** if the revenue document referencing this revenue source should update the actual reimbursement amount in the APPR. If left blank, the system defaults to ***N***.

14 **Rev Srce Post** *(optional default, alpha field; 1 position)*. Key in ***Y*** if the revenue source should be used when accessing the ACED for posting to the General Ledger. The BOC/RSRC Post flag in the ACEV must also be ***Y*** for the accounting event specified in the ACEN. If left blank, the system defaults to ***N***.

After keying in the data, press [Enter]. All records (lines) that are error-free or tagged with warning messages are added; records that contain either overrideable or fatal errors are not added. The message *All Lines Added* is displayed at the bottom of the screen to indicate that all or some records have been added; if any records contain errors, error messages are also displayed. For more information about error messages and correcting errors, see **Part 2, System Edits**.

- To add another record, repeat the above process.

Performing Other Actions. For instructions on displaying, changing, and deleting a record, or performing any other action, see **Part 2, Using Tables**.

Requisition Text Data Entry Table (RXTX)

The RXTX is used to define text associated with a requisition.

To access the RXTX, at the FFS screen, key in ***N*** at the Action field and ***RXTX*** at the TableID field, then press [Enter]. The RXTX screen (**Figure 8:72**) is displayed with an ***S*** in the Action field.

Instructions for adding are discussed below.

Note: If you are not authorized to perform a specific processing action (adding, changing, or deleting a record) in this table, contact your Functional Administrator responsible for Table Maintenance.

Adding A Record. At the RXTX screen, complete the fields as follows:

1 **Action** *(required, alpha field; 1 position)*. Key in ***A***.

2 **TableID** (*no-entry*). Displays ***RXTX***.

3 **UserID** (*no-entry*). Displays the user ID.

4 **RX ID** 🔑 *(required, alphanumeric field; 2 positions)*. Key in a code that identifies the transaction followed by the requisition document number.

5 **Comm Line Number** 🔑 *(required, numeric field; max. of 3 positions)*. Key in the commodity line number with which the text is associated. A commodity line number of ***000*** indicates text associated with the header of the purchase order.

6 **Text** *(optional, alphanumeric field; max. of 599,940 positions)*. Key in a description of the commodity. You may enter up to a max. of 9,999 lines with a max. of 60 positions for each line.

7 **Text Line** 🔑 *(optional, numeric field; max. of 4 positions)*. Key in the number of this text line. If left blank, the system defaults to the line number based on the previous line number.

After keying in the data, press [Enter]. All records (lines) that are error-free or tagged with warning messages are added; records that contain either overrideable or fatal errors are not added. The message *All Lines Added* is displayed at the bottom of the screen to indicate that all or some records have been added; if any records contain errors, error messages are also displayed. For more information about error messages and correcting errors, see **Part 2, System Edits**.

- To add another record, repeat the above process.

Performing Other Actions. For instructions on displaying, changing, and deleting a record, or performing any other action, see **Part 2, Using Tables**.

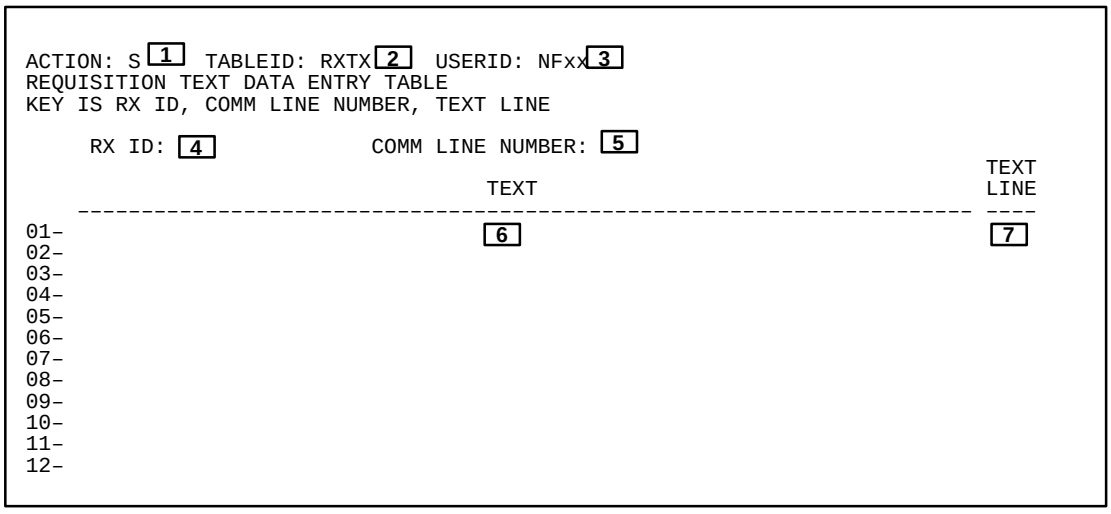

Figure 8:72. Requisition Text Data Entry Table (RXTX)

Schedule Number Data Entry Table (SCHD)

The SCHD is used to define agency schedule numbers used by the Automated Disbursements payment determination process.

To access the SCHD, at the FFS screen, key in ***N*** at the Action field and ***SCHD*** at the TableID field, then press [Enter]. The SCHD screen (**Figure 8:73**) is displayed with an ***S*** in the Action field.

Instructions for adding are discussed below.

Note: If you are not authorized to perform a specific processing action (adding, changing, or deleting a record) in this table, contact your Functional Administrator responsible for Table Maintenance.

Adding A Record. At the SCHD screen, complete the fields as follows:

[1] **Action** *(required, alpha field; 1 position)*. Key in ***A***.

[2] **TableID** *(no-entry)*. Displays ***SCHD***.

[3] **UserID** *(no-entry)*. Displays the user ID.

[4] **Fisc Year** 🔑 *(required, numeric field; 2 positions)*. Key in the last 2 digits of the applicable fiscal year.

[5] **Schedule Category** 🔑 *(required, alpha field; 1 position)*. Key in one of the following codes that corresponds to the payment category:

T = Treasury check tape
A = ACH
S = TFCS

[6] **Schedule Type** 🔑 *(required, alpha field; 1 position)*. Key in one of the following codes that corresponds to the type of schedule:

M = Miscellaneous
T = Transportation

The schedule number entered in used for both ***M*** and ***T*** schedule types produced during the Automated Disbursements process.

[7] **Schedule Number** 🔑 *(required, alpha field; 1 position)*. Key in the agency-assigned schedule number to be used by the Automated Disbursements Treasury payment determination process.

After keying in the data, press [Enter]. All records (lines) that are error-free or tagged with warning messages are added; records that contain either overrideable or fatal errors are not added. The message *All Lines Added* is displayed at the bottom of the screen to indicate that all or some records have been added; if any records contain errors, error messages are also displayed. For more information about error messages and correcting errors, see **Part 2, System Edits**.

- To add another record, repeat the above process.

Performing Other Actions. For instructions on displaying, changing, and deleting a record, or performing any other action, see **Part 2, Using Tables**.

```
ACTION: S [1] TABLEID: SCHD [2] USERID: NFxx [3]
SCHEDULE NUMBER DATA ENTRY TABLE
KEY IS FISC YEAR, SCHEDULE CATEGORY, SCHEDULE TYPE, SCHEDULE NUMBER

    FISC
    YEAR     SCHEDULE CATEGORY      SCHEDULE TYPE     SCHEDULE NUMBER
    ----     -----------------      -------------     ---------------
01-  [4]            [5]                 [6]               [7]
02-
03-
04-
05-
06-
07-
08-
09-
10-
11-
12-
13-
14-
```

Figure 8:73. Schedule Number Data Entry Table (SCHD)

Standard General Ledger Account Reference Table (SGLT)

The SGLT is used to define valid Standard General Ledger account codes.

To access the SGLT, at the FFS screen, key in ***N*** at the Action field and ***SGLT*** at the TableID field, then press [Enter]. The SGLT screen (**Figure 8:74**) is displayed with an ***S*** in the Action field.

Instructions for adding are discussed below.

Note: If you are not authorized to perform a specific processing action (adding, changing, or deleting a record) in this table, contact your Functional Administrator responsible for Table Maintenance.

Adding A Record. At the SGLT screen, complete the fields as follows:

[1] **Action** *(required, alpha field; 1 position)*. Key in ***A***.

[2] **TableID** (*no-entry*). Displays ***SGLT***.

[3] **UserID** (*no-entry*). Displays the user ID.

[4] **Fiscal Year** *(optional, numeric field; 2 positions)*. Key in the last 2 digits of the budget fiscal year to which this document belongs. See the FSYR for valid fiscal years.

[5] **SGL Account** *(required, numeric field, 2 positions)*. Key in the code for the Standard General Ledger account.

[6] **SGL Account Name** *(optional, alphanumeric field, max. of 30 positions)*. Key in the description you want to print in the reports.

[7] **Short Name** *(optional, alphanumeric field. max. of 12 positions)*. Key in the name that you want to appear in the reports when there is not enough room for the full name.

[8] **Nat Bal** (*optional, alpha field, 1 position*). Key in ***D*** (debit) or ***C*** (credit) to indicate the natural balance.

After keying in the data, press [Enter]. All records (lines) that are error-free or tagged with warning messages are added; records that contain either overrideable or fatal errors are not added. The message *All Lines Added* is displayed at the bottom of the screen to indicate that all or some records have been added; if any records contain errors, error messages are also displayed. For more information about error messages and correcting errors, see **Part 2, System Edits**.

- To add another record, repeat the above process.

Performing Other Actions. For instructions on displaying, changing, and deleting a record, or performing any other action, see **Part 2, Using Tables**.

```
ACTION: S [1]  TABLEID: SGLT [2]   USERID: NFxx  [3]
STANDARD GENERAL LEDGER ACCOUNT REFERENCE TABLE
KEY IS FISCAL YEAR, SGL ACCOUNT

    FISCAL YEAR  SGL ACCOUNT     SGL ACCOUNT NAME    SHORT NAME      NAT BAL
    ----------- ----------- ------------------------------ ------------------
01-     [4]         [5]                [6]             [7]             [8]
02-
03-
04-
05-
06-
07-
08-
09-
10-
11-
12-
13-
14-
15-
```

Figure 8:74. Standard General Ledger Account Reference Table (SGLT)

Subsidiary Journal Definition Reference Table (SJDF)

The SJDF is used to allow the creation of up to 50 subsidiary journals, derived from daily document processing. These journals can be used for reporting purposes.

To access the SJDF, at the FFS screen, key in ***N*** at the Action field and ***SJDF*** at the TableID field, then press [Enter]. The SJDF screen (**Figure 8:75**) is displayed with an ***S*** in the Action field.

Instructions for adding are discussed below.

Note: If you are not authorized to perform a specific processing action (adding, changing, or deleting a record) in this table, contact your Functional Administrator responsible for Table Maintenance.

Adding A Record. At the SJDF screen, complete the fields as follows:

[1] **Action** *(required, alpha field; 1 position)*. Key in ***A***.

[2] **TableID** (*no-entry*). Displays ***SJDF***.

[3] **UserID** (*no-entry*). Displays the user ID.

[4] **Fisc Year** 🔑 *(required, numeric field; 2 positions)*. Key in the number that corresponds to the accounting fiscal year.

[5] **Trans Code** 🔑 *(conditional, alphanumeric field; 2 positions)*. If the accounting type (**Field 6**) is entered, leave this field blank. Otherwise, key in the accounting transaction code (such as PO) that corresponds to the subsidiary journal.

[6] **Acct Type** 🔑 *(conditional, alphanumeric field; 2 positions)*. If the accounting transaction code (**Field 5**) is entered, leave this field blank. Otherwise, key in the account type used when creating the subsidiary journal.

[7] **GL Acct** 🔑 *(optional, alphanumeric field; 4 positions)*. Key in the general ledger account used when creating the subsidiary journal. General ledger account can only be used if you have previously entered an accounting type.

[8] **Gen/Memo Ind** 🔑 *(required, alpha field; 1 position)*. Key in one of the following:

- ***G*** = General Journal
- ***M*** = Memo Journal
- ***B*** = Both

[9] **File Num** *(required, alphanumeric field; 4 positions)*. Key in a unique code that corresponds to each specific subsidiary journal. The maximum number of subsidiary journals is 50.

```
ACTION: S [1]  TABLEID: SJDF[2]  USERID: NFxx [3]
SUBSIDIARY JOURNAL DEFINITION REFERENCE TABLE
KEY IS FISC YEAR, TRANS CODE, ACCT TYPE, GL ACCT, GEN/MEMO IND

    FISC    TRANS    ACCT     GL     GEN/MEMO    FILE
    YEAR    CODE     TYPE    ACCT      IND       NUM
    ----    -----    ----    ----    --------    ----
01- [4]     [5]      [6]     [7]       [8]       [9]
02-
03-
04-
05-
06-
07-
08-
09-
10-
11-
12-
13-
14-
```

Figure 8:75. Subsidiary Journal Definition Reference Table (SJDF)

After keying in the data, press [Enter]. All records (lines) that are error-free or tagged with warning messages are added; records that contain either overrideable or fatal errors are not added. The message *All Lines Added* is displayed at the bottom of the screen to indicate that all or some records have been added; if any records contain errors, error messages are also displayed. For more information about error messages and correcting errors, see **Part 2, System Edits**.

- To add another record, repeat the above process.

Performing Other Actions. For instructions on displaying, changing, and deleting a record, or performing any other action, see **Part 2, Using Tables**.

System Control Options Reference Table (SOPT)

The SOPT is used to:

- Provide a set of system-wide instructions for FFIS to use in determining which edits to perform and how to perform those edits when processing data.
- Define whether or not the Project Cost Accounting function is used.
- Define cross-reference table defaults.

To access the SOPT, at the FFS screen, key in ***N*** at the Action field and ***SOPT*** at the TableID field, then press [Enter]. The SOPT screen (**Figure 8:76**) is displayed with an ***S*** in the Action field.

Instructions for adding are discussed below.

Note: If you are not authorized to perform a specific processing action (adding, changing, or deleting a record) in this table, contact your Functional Administrator responsible for Table Maintenance.

Adding A Record. At the SOPT screen, complete the fields as follows:

[1] **Action** *(required, alpha field; 1 position)*. Key in ***A***.

[2] **TableID** (*no-entry*). Displays ***SOPT***.

[3] **UserID** (*no-entry*). Displays the user ID.

[4] **Fiscal Year** 🔑 *(required, numeric field; 2 positions)*. Key in the last 2 digits of the fiscal year.

[5] **Fixed Asset (Subsystem Installed Options)** *(optional default, alpha field; 1 position)*. Key in ***N*** to indicate that the Fixed Assets function is not installed for RD. If left blank, the system defaults to ***N***.

[6] **Inventory (Subsystem Installed Options)** *(optional default, alpha field; 1 position)*. Key in ***N*** to indicate that the Inventory system is not installed for RD. If left blank, the system defaults to ***N***.

[7] **Project Cost (Subsystem Installed Options)** *(optional default, alpha field; 1 position)*. Key in ***Y*** to indicate that the Project Cost Accounting function is installed for RD use. If left blank, the system defaults to ***N***.

[8] **Acct (GLBL) (G/L Balance Control Options)** *(optional default, alpha field; 1 position)*. Key in one of the following:

- ***Y*** = The GLBL is updated online.
- ***O*** = The GLBL is updated offline through the Run split process.
- ***N*** = The GLBL is not updated.

If left blank, the system defaults to ***N***.

[9] **Detail Acct (GLDB) (G/L Balance Control Options)** *(optional default, alpha field; 1 position)*. Key in one of the following:

- ***Y*** = The GLBL is updated online.
- ***O*** = The GLBL is updated offline through the Run split process.
- ***N*** = The GLBL is not updated.

If left blank, the system defaults to ***N***.

```
ACTION: S [1]  TABLEID: SOPT [2] USERID: NFxx [3]
SYSTEM CONTROL OPTIONS REFERENCE TABLE
KEY IS FISCAL YEAR
                              FISCAL YEAR: [4]

SUBSYSTEM INSTALLED OPTIONS-  FIXED ASSET: [5] INVENTORY: [6] PROJECT COST: [7]
G/L BALANCE CONTROL OPTIONS-  ACCT: [8] DETAIL ACCT: [9]  MONTHLY SUM ACCT: [10]
                            (GLBL)          (GLDB)               (MSGL)
OTHER OPTIONS-
      VENDOR REQD ON SPEND DOC: [11]  VENDOR TABLE UPDATES VNDR NAME TBL: [12]
  COMMODITY CODE REQD ON PURCH: [13] INFER ACCTG DIST FROM REFERENCE DOC: [14]
  MISC ORDER REQUIRES RECEIVER: [15]       MISC ORDER REQUIRES VNDR INVC: [16]
PAYMENT VOUCHER NOT > RECEIVER: [17]     PAYMENT VOUCHER NOT > VNDR INVC: [18]
  COMMITMENT AMT SPEND CONTROL: [19]     SPEND CONTROL UPDATE SPDX TABLE: [20]
                                         BILL DOC REFUND EXP UPDT BUDGET: [21]
                USE DXRF TABLE: [22]                    USE VXRF TABLE: [23]
                USE IVCH TABLE: [24]              KEEP TRANSACTION LOG: [25]
             FUND SPLIT IN USE: [26]
           FTE HOURS PER YEAR: [27]      ADDITIONAL SPEND CONTROL OPTION: [28]
DOCUMENT TRACKING DEFAULT ORGANIZATIONS-
   PAYMENT DOCS:  [29]    DOC ID:  [30]     ACCOUNTABLE DOCS: [31]
```

Figure 8:76. System Control Options Reference Table (SOPT)

10 Monthly Sum Acct (MSGL) (G/L Balance Control Options) *(optional default, alpha field; 1 position)*. Key in one of the following:

- ***Y*** = The MSGL is updated online.
- ***O*** = The MSGL is updated offline through the Run split process.
- ***N*** = The MSGL is not updated.

If left blank, the system defaults to ***N***.

11 Vendor Reqd on Spend Doc (Other Options) *(optional default, alpha field; 1 position)*. Key in ***Y*** to specify that vendor codes are required on all spending documents. If left blank, the system defaults to ***N***.

12 Vendor Table Updates Vndr Name Tbl (Other Options) *(optional default, alpha field; 1 position)*. Key in ***Y*** to specify that all updates to the VEND should be reflected in the VNAM. If left blank, the system defaults to ***N***.

13 Commodity Code Reqd on Purch (Other Options) *(optional default, alpha field; 1 position)*. Key in ***Y*** to specify that commodity codes are required on purchasing documents. If left blank, the system defaults to ***N***.

14 Infer Acctg Dist From Reference Doc (Other Options) *(optional default, alpha field; 1 position)*. Key in ***Y*** to specify that FFIS should infer the accounting distribution from the referenced document. If left blank, the system defaults to ***N***.

15 Misc Order Requires Receiver (Other Options) *(optional default, alpha field; 1 position)*. Key in ***Y*** to specify that receiver documents are required prior to payment against the purchase order. If left blank, the system defaults to ***N***.

16 Misc Order Requires Vndr Invc (Other Options) *(optional default, alpha field; 1 position)*. Key in ***Y*** to specify that all vendor invoice codes are required on payment documents and the invoice must exist in the VIHT. If left blank, the system defaults to ***N***.

17 Payment Voucher Not>Receiver (Other Options) *(optional default, alpha field; 1 position)*. Key in ***Y*** to specify that a payment document is rejected if the total payment amount against an obligation is greater than the total received and accepted amount of that obligation. If left blank, the system defaults to ***N***.

18 Payment Voucher Not>Vndr Invc (Other Options) *(optional default, alpha field; 1 position)*. Key in ***Y*** to specify that a payment document is rejected if: (1) the total payment amount is greater than the total invoiced amount, or (2) the vendor invoice does not exist in the VIHT. If left blank, the system defaults to ***N***.

19 Commitment Amt Spend Control (Other Options) *(optional default, alpha field; 1 position)*. Key in ***Y*** to specify that a commitment reserves budgetary funds. Key in ***N*** to specify that commitment amounts are only included in spending control calculations for commitment documents. If left blank, the system defaults to ***N***.

20 Spend Control Update SPDX Table (Other Options) *(optional default, alpha field; 1 position)*. Key in ***Y*** to specify that the spending controls routine updates the SPDX for all spending documents. If left blank, the system defaults to ***N***.

21 Bill Doc Refund Exp Updt Budget (Other Options) *(optional default, alpha field; 1 position)*. Key in ***Y*** to specify that billing documents that are for refunds of expenditures updates the budget tables. Key in ***N*** to specify that only the cash receipt for refund of expenditures updates the budget tables. If left blank, the system defaults to ***N***.

22 Use DXRF Table (Other Options) *(optional default, alpha field; 1 position)*. Key in ***Y*** if you want the DXRF updated when a document references another document. If left blank, the system defaults to ***N***.

23 Use VXRF Table (Other Options) *(optional default, alpha field; 1 position)*. Key in ***Y*** if you want the VXRF updated when a document is entered with a vendor code. If left blank, the system defaults to ***N***.

24 Use IVCH Table (Other Options) *(optional default, alpha field; 1 position)*. Key in ***Y*** to specify that the IVCH is used to associate check lines with payment voucher documents and vendor invoice numbers. If left blank, the system defaults to ***N***.

25 Keep Transaction Log (Other Options) *(optional default, alpha field; 1 position)*. Key in one of the following:

- ***Y*** = Journal Posting and Runsplit updates the transaction log with all documents.
- ***P*** = Journal Posting and Runsplit updates the transaction log with documents with only NULL postings.
- ***N*** = Journal Posting and Runsplit does not update the transaction log.

If left blank, the system defaults to ***N***.

26 Fund Split In Use (Other Options) *(optional default, alpha field; 1 position)*. Key in ***Y*** to allow fund split processing. If left blank, the system defaults to ***N***.

27 **FTE Hours Per Year (Other Options)** *(optional default, alpha field; 1 position)*. Key in the conversion value for FTE actual and accrued hours. If left blank, the system defaults to ***N***.

28 **Additional Spend Controls (Other Options)** *(optional default, alpha field; 1 position)*. Key in ***Y*** to specify that additional spending controls is used. If left blank, the system defaults to ***N***.

Note: Fields 29 through 31 are used for document tracking default organizations.

29 **Payment Docs** *(optional, alphanumeric field; 7 positions)*. Key in the default organization used for payment documents that update the document tracking tables but do not specify an organization.

30 **Doc ID** *(optional, alphanumeric field; 7 positions)*. Key in the default organization used for documents that update the document tracking tables but do not specify an organization.

31 **Accountable Docs** *(optional, alphanumeric field; 7 positions)*. Key in the default organization used for accountable documents that update the document tracking tables but do not specify an organization.

After keying in the data, press [Enter]. All records (lines) that are error-free or tagged with warning messages are added; records that contain either overrideable or fatal errors are not added. The message *All Lines Added* is displayed at the bottom of the screen to indicate that all or some records have been added; if any records contain errors, error messages are also displayed. For more information about error messages and correcting errors, see **Part 2, System Edits**.

- To add another record, repeat the above process.

Performing Other Actions. For instructions on displaying, changing, and deleting a record, or performing any other action, see **Part 2, Using Tables**.

Source Data Reference Table (SRCE)

The SRCE is used to define valid sources of overpayments that can be used on the Billing document(s).

To access the SRCE, at the FFS screen, key in ***N*** at the Action field and ***SRCE*** at the TableID field, then press [Enter]. The SRCE screen (**Figure 8:77**) is displayed with an ***S*** in the Action field.

Instructions for adding are discussed below.

Note: If you are not authorized to perform a specific processing action (adding, changing, or deleting a record) in this table, contact your Functional Administrator responsible for Table Maintenance.

Adding A Record. At the SRCE screen, complete the fields as follows:

[1] **Action** *(required, alpha field; 1 position)*. Key in ***A***.

[2] **TableID** *(no-entry)*. Displays ***SRCE***.

[3] **UserID** *(no-entry)*. Displays the user ID.

[4] **Source** 🔑 *(required, alphanumeric field; 4 positions)*. Key in the value to describe the source of overpayment used on a billing document.

[5] **Source Long Name** *(optional, alpha field; max. of 30 positions)*. Key in the long name you wish to associate with the source.

[6] **Source Short Name** *(optional, alpha field; max. of 12 positions)*. Key in the short name you wish to associate with the source.

After keying in the data, press [Enter]. All records (lines) that are error-free or tagged with warning messages are added; records that contain either overrideable or fatal errors are not added. The message *All Lines Added* is displayed at the bottom of the screen to indicate that all or some records have been added; if any records contain errors, error messages are also displayed. For more information about error messages and correcting errors, see **Part 2, System Edits**.

- To add another record, repeat the above process.

Performing Other Actions. For instructions on displaying, changing, and deleting a record, or performing any other action, see **Part 2, Using Tables**.

```
ACTION: S [1]  TABLEID: SRCE[2]   USERID: NFxx  [3]
SOURCE DATA REFERENCE TABLE
KEY IS SOURCE

    SOURCE           SOURCE LONG NAME            SOURCE SHORT NAME
    ------     ------------------------------    -----------------
01-   [4]                   [5]                        [6]
02-
03-
04-
05-
06-
07-
08-
09-
10-
11-
12-
13-
14-
15-
```

Figure 8:77. Source Date Reference Table (SRCE)

State Code Reference Table (STCT)

The STCT is used to define the state code abbreviations.

To access the STCT, at the FFS screen, key in ***N*** at the Action field and ***STCT*** at the TableID field, then press [Enter]. The STCT screen (**Figure 8:78**) is displayed with an ***S*** in the Action field.

Instructions for adding are discussed below.

Note: If you are not authorized to perform a specific processing action (adding, changing, or deleting a record) in this table, contact your Functional Administrator responsible for Table Maintenance.

Adding A Record. At the STCT screen, complete the fields as follows:

[1] **Action** *(required, alpha field; 1 position)*. Key in ***A***.

[2] **TableID** (*no-entry*). Displays ***STCT***.

[3] **UserID** (*no-entry*). Displays the user ID.

[4] **State Code** *(required, alphanumeric field; 2 positions)*. Key in the code used to define the state.

[5] **State Name** *(required, alphanumeric field; max. of 30 positions)*. Key in the name of the state to infer from the state code.

After keying in the data, press [Enter]. All records (lines) that are error-free or tagged with warning messages are added; records that contain either overrideable or fatal errors are not added. The message *All Lines Added* is displayed at the bottom of the screen to indicate that all or some records have been added; if any records contain errors, error messages are also displayed. For more information about error messages and correcting errors, see **Part 2, System Edits**.

- To add another record, repeat the above process.

Performing Other Actions. For instructions on displaying, changing, and deleting a record, or performing any other action, see **Part 2, Using Tables**.

```
ACTION: S [1]   TABLEID: STCT[2]    USERID: NFxx[3]
STATE CODE REFERENCE TABLE
KEY IS STATE CODE

           STATE
           CODE                    STATE NAME
           ------          ------------------------------
01-         [4]                        [5]
02-
03-
04-
05-
06-
07-
08-
09-
10-
11-
12-
13-
14-
```

Figure 8:78. State Code Reference Table (STCT)

Tax Code Reference Table (TAXT)

The TAXT is used to:

- Define the various tax codes and categories used when determining whether relocation reimbursements qualify as taxable or nontaxable income.
- Store data used when generating the Employee Moving Expense Information Report (IRS Form 4782).

To access the TAXT, at the FFS screen, key in ***N*** at the Action field and ***TAXT*** at the TableID field, then press [Enter]. The TAXT screen (**Figure 8:79**) is displayed with an ***S*** in the Action field.

Instructions for adding are discussed below.

Note: If you are not authorized to perform a specific processing action (adding, changing, or deleting a record) in this table, contact your Functional Administrator responsible for Table Maintenance.

Adding A Record. At the TAXT screen, complete the fields as follows:

[1] **Action** (*required, alpha field; 1 position*). Key in ***A***.

[2] **TableID** (*no-entry*). Displays ***TAXT***.

[3] **UserID** (*no-entry*). Displays the user ID.

[4] **Fiscal Year** (*required, numeric field; 2 positions)*. Key in the last two digits of the appropriate fiscal year.

[5] **Tax Code** (*required, alpha field; 1 position*). Key in an unique identification for this code.

[6] **IRS Category** (*required, alpha field; 1 position*). Key in the code (***A*** through ***F***) that corresponds to the line number of IRS Form 4782.

[7] **Third Party** (*conditional, alpha field; 1 position*). If the tax code relates to a third party, key in ***Y***. If the tax code does not relate to a third party, key in ***N***. Third party payments are printed in a separate column in IRS Form 4782. If left blank, the system defaults to ***N***.

[8] **Taxable** (*conditional, alpha field; 1 position*). If the tax code does not relate to a nontaxable event, key in ***Y***. If the tax code relates to a nontaxable event, key in ***N***. Nontaxable items do not appear in IRS Form 4782. If left blank, the system defaults to ***Y***.

[9] **Description** (*optional, alphanumeric field; 20 positions*). Key in the description for the tax code being defined in this table.

```
ACTION: S [1] TABLEID: TAXT [2] USERID: NFxx   [3]
TAX CODE REFERENCE TABLE
KEY IS FISCAL YEAR, TAX CODE

FISCAL YEAR:  [4]

     TAX       IRS       THIRD
     CODE    CATEGORY    PARTY    TAXABLE          DESCRIPTION
    -----   ---------   ------   -------   --------------------------------
01-  [5]       [6]       [7]       [8]              [9]
02-
03-
04-
05-
06-
07-
08-
09-
10-
11-
```

Figure 8:79. Tax Code Reference Table (TAXT)

After keying in the data, press [Enter]. All records (lines) that are error-free or tagged with warning messages are added; records that contain either overrideable or fatal errors are not added. The message *All Lines Added* is displayed at the bottom of the screen to indicate that all or some records have been added; if any records contain errors, error messages are also displayed. For more information about error messages and correcting errors, see **Part 2, System Edits**.

- To add another record, repeat the above process.

Performing Other Actions. For instructions on displaying, changing, and deleting a record, or performing any other action, see **Part 2, Using Tables**.

Transaction Category Reference Table (TCAT)

The TCAT is used to:

- Group various transaction codes into a pre-defined and specific transaction category.
- Indicate options for the transaction codes regarding document tracking, prompt pay, posting of documents with a future accounting period, automatic printing of printable transactions (e.g., purchase and travel orders, billing documents), and required field edits.

To access the TCAT, at the FFS screen, key in ***N*** at the Action field and ***TCAT*** at the TableID field, then press [Enter]. The TCAT screen (**Figure 8:80**) is displayed with an ***S*** in the Action field.

Instructions for adding are discussed below.

Note: If you are not authorized to perform a specific processing action (adding, changing, or deleting a record) in this table, contact your Functional Administrator responsible for Table Maintenance.

Adding A Record. At the TCAT screen, complete the fields as follows:

[1] **Action** *(required, alpha field; 1 position)*. Key in ***A***.

[2] **TableID** (*no-entry*). Displays ***TCAT***.

[3] **UserID** (*no-entry*). Displays the user ID.

[4] **Transaction Code** *(required, numeric field; 2 positions)*. Key in the code used to define the transaction.

[5] **Transaction Category** *(required, alphanumeric field; 2 positions)*. Key in a valid pre-defined transaction category that is applicable to RD.

[6] **Transaction Description** *(optional, alphanumeric field; max. of 30 positions)*. Key in a description of the transaction**.**

[7] **Percent (Overage Tolerance)** *(optional default, numeric field; 2 positions)*. Key in the percent amount that is used to calculate the tolerance when the document amount exceeds the referenced document amount. The percent is used when the difference amount between related documents is greater than the minimum amount but less then the maximum amount. If left blank, the system defaults to ***00%***.

```
ACTION: S [1]  TABLEID: TCAT[2]  USERID: NFxx [3]
TRANSACTION CATEGORY REFERENCE TABLE
KEY IS TRANSACTION CODE
01-
    TRANSACTION CODE: [4]  TRANSACTION CATEGORY: [5]
    TRANSACTION DESCRIPTION: [6]

    OVERAGE TOLERANCE              UNDERAGE TOLERANCE
    PERCENT: [7] %                 PERCENT: [8] %
    MAX AMT: [9]                   MAX AMT: [10]
    MIN AMT: [11]                  MIN AMT: [12]

    ----------------------------- FLAGS -----------------------------
               VERIFY:    [13]     PROMPT PAY: [14] ALLOW FUTURE PER: [15]
                PRINT:    [16] VENDOR POSTING: [17] DOC REF REQUIRED: [18]
    DOC TRACK VOUCHER: [19] DOC TRACK ACCOUNT[20]  DOC TRACK NUMBER: [21]
      REQUIRED FIELDS: [22] ACCTG REQ TV DISB:  [23]  DOC XREF TYPE: [24]
     BALANCED SV REQD: [25]      REF QUANTITY:  [26]   P/F IND REQD: [27]
    ACCTG PERIOD REQD: [28]          RECOVERY DETERMINATION LEVEL: [29]
```

Figure 8:80. Transaction Category Reference Table (TCAT)

[8] **Percent (Underage Tolerance)** *(optional default, numeric field; 2 positions)*. Key in the percent amount that is used to calculate the tolerance when the document amount is less than the referenced document amount and the referenced document is being finalized. The percent is used when the difference amount between related documents is greater than the minimum amount but less then the maximum amount. If left blank, the system defaults to ***00%***.

[9] **Max Amt (Overage Tolerance)** *(optional default, numeric field; max. of 17 positions)*. Key in the maximum dollar amount by which a document can exceed the amount on the referenced document. This field works in conjunction with the Percent (Overage Tolerance) (**Field 7**). If left blank, the system defaults to ***0.00***.

[10] **Max Amt (Underage Tolerance)** *(optional default, numeric field; max. of 17 positions)*. Key in the maximum dollar amount by which a document can be under the amount on the referenced document. This field works in conjunction with the Percent (Underage Tolerance) (**Field 8**). If left blank, the system defaults to ***0.00***.

[11] **Min Amt (Overage Tolerance)** *(optional default, numeric field; max. of 17 positions)*. Key in the minimum dollar amount by which a document can exceed the amount on the referenced document. This field works in conjunction with the Percent (Overage Tolerance) (**Field 7**). If left blank, the system defaults to ***0.00***.

[12] **Min Amt (Underage Tolerance)** *(optional default, numeric field; max. of 17 positions)*. Key in the minimum dollar amount by which a document can be under the amount on the referenced document. This field works in conjunction with the Percent (Underage Tolerance) (**Field 8**). If left blank, the system defaults to ***0.00***.

Note: Fields [13] through [29] are used as flags.

[13] **Verify** *(optional default, alpha field; 1 position)*. Key in ***Y*** to require that all information be verified with the action of **V** before further processing can be completed. Key in ***N*** to indicate that the visual verification is not required. If left blank, the system defaults to ***N***.

[14] **Prompt Pay** *(optional default, alpha field; 1 position)*. Key in ***Y*** if this transaction code should be under prompt pay controls. If left blank, the system defaults to ***N***.

[15] **Allow Future Per** *(optional default, alpha field; 1 position)*. Key in ***Y*** if documents with this transaction code are allowed to process with future accounting period. If left blank, the system defaults to ***N***.

[16] **Print** *(optional default, alpha field; 1 position)*. Key in ***Y*** if you wish the default value of the print flag for this transaction to be **Y**. If left blank, the system defaults to ***N***.

[17] **Vendor Posting** *(optional default, alpha field; 1 position)*. Key in ***Y*** if special General Ledger posting is required for this vendor type. If left blank, the system defaults to ***N***.

[18] **Doc Ref Required** *(optional default, alpha field; 1 position)*. Key in ***Y*** if a document reference is required for this type of transaction. Key in ***N*** if a document reference is not required. If left blank, the system defaults to ***N***.

[19] **Doc Track Voucher** *(optional default, alpha field; 1 position)*. Key in one of the following:

- ***N*** = The document is not tracked.
- ***Y*** = The document is tracked but if the Document Tracking record does not exist when the document is processed, a Document Tracking record is system generated for the document.
- ***R*** = The Document Tracking record is required before the document can be accepted.
- ***U*** = The document processor updates Document Tracking tables if the Document Tracking record already exists but does not create a Document Tracking record if the referenced document did not already exist in the Document Tracking tables.

If left blank, the system defaults to ***N***.

[20] **Doc Track Account** *(optional default, alpha field; 1 position)*. Key in one of the following:

- ***N*** = The document is not tracked.
- ***Y*** = The document is tracked but if the Document Tracking record does not exist when the document is processed, a Document Tracking record is system generated for the document.
- ***R*** = The Document Tracking record is required before the document can be accepted.
- ***U*** = The document processor updates Document Tracking tables if the Document Tracking record already exists but does not create a Document Tracking record if the referenced document did not already exist in the Document Tracking tables.

If left blank, the system defaults to ***N***.

21 Doc Track Number *(optional default, alpha field; 1 position)*. Key in one of the following:

- ***N*** = The document is not tracked.
- ***Y*** = The document is tracked but if the Document Tracking record does not exist when the document is processed, a Document Tracking record is system generated for the document.
- ***R*** = The Document Tracking record is required before the document can be accepted.
- ***U*** = The document processor updates Document Tracking tables if the Document Tracking record already exists but does not create a Document Tracking record if the referenced document did not already exist in the Document Tracking tables.

If left blank, the system defaults to ***N***.

22 Required Fields *(optional default, alpha field; 1 position)*. Key in ***N*** if this transaction code should be exempt from the required fields edit as specified in the PFND. Key in ***Y*** if all accounting distribution lines in this document requires those fields identified as required in the PFND. If left blank, the system defaults to ***N***.

23 Acct Req TV Disb *(optional default, alpha field; 1 position)*. Key in ***Y*** to indicate that accounting lines are required for Owed Employee and Tax Withheld fields on travel vouchers with this document code. If left blank, the system defaults to ***N***.

24 Doc Xref Type *(required, alpha field; 1 position)*. Key in ***R*** if only documents containing a reference to another document should update the DXRF. Key in ***A*** if all documents are to update the DXRF.

25 Balanced SV Reqd *(optional default, alpha field; 1 position)*. Key in ***Y*** if the transaction category represents a balanced standard voucher requiring a document total which nets to zero. If left blank, the system defaults to ***N***.

26 Ref Quantity *(optional default, alpha field; 1 position)*. Key in ***N*** if the RC does not edit on fixed assets. Key in ***M*** if the RC edits edits on fixed assets. Key in ***S*** if the quantity received in the RC is **0** or **1**. If left blank, the system defaults to ***N***.

27 P/F Ind Reqd *(optional default, alpha field; 1 position)*. Key in ***Y*** if the partial/final indicator is required when processing this transaction code which contains a reference. If left blank, the system defaults to ***N***.

28 Acctg Period Reqd *(optional default, alpha field; 1 position)*. Key in ***Y*** if the Accounting Period is required when processing this transaction code. If left blank, the system defaults to ***N***.

29 Recovery Determination Level *(optional default, alpha field; 1 position)*. This flag determines whether recoveries are posted by this transaction code and if so, under what circumstances. Key in one of the following:

- ***N*** = Do not post recoveries.
- ***L*** = Post recoveries for each line generates them.
- ***D*** = Net all the lines that post to old no-year or multi-year funds. If the net effect is to reduce obligations or expenditures, then post a recovery for the total. Otherwise, do not post a recovery.
- ***Z*** = Net all the lines that post to old no-year or multi-year funds. If the net effect is zero, do not post recoveries. If the net effect is not zero, post recoveries for each line that generates them.

If left blank, the system defaults to ***N***.

After keying in the data, press [Enter]. All records (lines) that are error-free or tagged with warning messages are added; records that contain either overrideable or fatal errors are not added. The message *All Lines Added* is displayed at the bottom of the screen to indicate that all or some records have been added; if any records contain errors, error messages are also displayed. For more information about error messages and correcting errors, see **Part 2, System Edits**.

- To add another record, repeat the above process.

Performing Other Actions. For instructions on displaying, changing, and deleting a record, or performing any other action, see **Part 2, Using Tables**.

Travel Description Reference Table (TDES)

The TDES is used to define valid travel description codes and associated attributes.

To access the TDES, at the FFS screen, key in ***N*** at the Action field and ***TDES*** at the TableID field, then press [Enter]. The TDES screen (**Figure 8:81**) is displayed with an ***S*** in the Action field.

Instructions for adding are discussed below.

Note: If you are not authorized to perform a specific processing action (adding, changing, or deleting a record) in this table, contact your Functional Administrator responsible for Table Maintenance.

Adding A Record. At the TDES screen, complete the fields as follows:

[1] **Action** (*required, alpha field; 1 position*). Key in ***A***.

[2] **TableID** (*no-entry*). Displays ***TDES***.

[3] **UserID** (*no-entry*). Displays the user ID.

[4] **Fiscal Year** (*required, numeric field; 2 positions)*. Key in the last 2 digits of the appropriate fiscal year.

[5] **Travel Description Code** (*required, alpha field; 1 position*). Key in the code that describes the nature of the expense. Suggested values are:

- ***A*** = Misc Tax allowance
- ***F*** = Family member transportation.
- ***G*** = General non third party
- ***H*** = Household item trans
- ***L*** = Commercial leased/government owned car
- ***M*** = Miscellaneous
- ***N*** = Non-travel misc.
- ***P*** = Per diem
- ***Q*** = Temporary quarters
- ***R*** = RITA tax
- ***S*** = Relocation srv resid
- ***T*** = General third party
- ***U*** = House hunting
- ***V*** = Gvts/GTR
- ***W*** = WTA expense
- ***Y*** = Real estate

[6] **Description** (*optional, alphanumeric field; 20 positions*). Key in the description of the nature of the travel expense. The description is printed on the travel order.

[7] **Third Party** (*conditional, alpha field; 1 position*). If payments are made to a third party, key in ***Y***. If payments are not made to a third party, key in ***N***. If either the WTA Flag (**Field 8**) or RITA Flag (**Field 9**) is **Y**, key in ***N***. Third party payment may not be made by a travel voucher. Only third party payments may be made in a transportation invoice or travel related payment voucher.

[8] **WTA Flag** (*conditional, alpha field; 1 position*). If the expense is related to withholding tax allowances, key in ***Y***. If payments are not related to withholding tax allowances, key in ***N***. If the RITA Flag (**Field 9**) is **Y**, key in ***N***.

```
ACTION: S [1] TABLEID: TDES [2] USERID: NFxx   [3]
  TRAVEL DESCRIPTION REFERENCE TABLE
  KEY IS FISCAL YEAR, TRAVEL DESCRIPTION CODE

  FISCAL YEAR:   [4]

       TRAVEL
     DESCRIPTION                          THIRD    WTA   RITA  ADVANCE
       CODE          DESCRIPTION          PARTY    FLAG  FLAG   FLAG
      ------------ ----------------------  -----    ----  ----   ----
 01-    [5]            [6]                 [7]     [8]   [9]    [10]
 02-
 03-
 04-
 05-
 06-
 07-
 08-
 09-
 10-
 11-
```

Figure 8:81. Travel Description Reference Table (TDES)

9 **RITA Flag** (*conditional, alpha field; 1 position*). If the expense is related to relocation income tax allowance, key in ***Y***. If payments are not related to relocation income tax allowance, key in ***N***. If the WTA Flag (**Field 8**) is **Y**, key in ***N***. You may not obligate funds for a travel order line with a RITA description code.

10 **Advance Flag** (*conditional, alpha field; 1 position*). If travel advances are permitted against the type of travel expense described by this code, key in ***Y***. If travel advances are not permitted against the type of travel expense described by this code, key in ***N***. It is recommended that the advance flag be **Y** only if the Third Party (**Field 7**) is **N**.

After keying in the data, press [Enter]. All records (lines) that are error-free or tagged with warning messages are added; records that contain either overrideable or fatal errors are not added. The message *All Lines Added* is displayed at the bottom of the screen to indicate that all or some records have been added; if any records contain errors, error messages are also displayed. For more information about error messages and correcting errors, see **Part 2, System Edits**.

- To add another record, repeat the above process.

Performing Other Actions. For instructions on displaying, changing, and deleting a record, or performing any other action, see **Part 2, Using Tables**.

Travel Default Values Table (TDFT)

The TDFT is used to establish default values for certain required fields in the travel order.

Note: Records may be changed or displayed at this table; records may not be added or deleted. A corresponding entry must exist in the TSPC to change entries in this table.

To access the TDFT, at the FFS screen, key in ***N*** at the Action field and ***TDFT*** at the TableID field, then press [Enter]. The TDFT screen (**Figure 8:82**) is displayed with an ***S*** in the Action field.

Instructions for changing records are discussed below.

Note: If you are not authorized to perform a specific processing action (changing a record) in this table, contact your Functional Administrator responsible for Table Maintenance.

Changing A Record. At the TDFT screen, complete the fields as follows:

[1] **Action** (*required, alpha field; 1 position*). Key in ***C***.

[2] **TableID** (*no-entry*). Displays ***TDFT***.

[3] **UserID** (*no-entry*). Displays the user ID.

[4] **Fiscal Year** 🔑 (*required, numeric field; 2 positions)*. Key in the last 2 digits of the appropriate fiscal year.

[5] **Default Active** (*conditional, alpha field; 1 position*). If the travel order documents use the default values in this table, key in ***Y***. The defaults are applied only if the corresponding fields in the document are blank. For example, the Travel Mode code in the travel order defaults to the value entered in this table if the field is blank. The default value appears in the document and you may choose to change it afterwards. If left blank, the system defaults to ***N***.

[6] **Travel Mode** (*conditional, alpha field; 4 positions*). If the Default Active (**Field 5**) is **Y**, key in a travel mode default value. Blanks are accepted as a default value. The default field value is used by the travel order.

[7] **Travel Purpose** (*conditional, alpha field; 5 positions*). If the Default Active (**Field 5**) is ***Y***, key in a travel purpose default value. Blanks are accepted as a default value. The default field value is used by the travel order.

[8] **Per Diem Code** (*conditional, alpha field; 1 position*). If the Default Active (**Field 5**) is ***Y***, key in a per diem code default value. Blanks are accepted as a default value. The default field value is used by the travel order.

```
ACTION: S [1] TABLEID: TDFT [2]  USERID: NFxx [3]
TRAVEL DEFAULT VALUES TABLE
KEY IS FISC YEAR
                    FISC YEAR:  [4]
                DEFAULT ACTIVE:  [5]
                   TRAVEL MODE:  [6]
                TRAVEL PURPOSE:  [7]
                 PER DIEM CODE:  [8]
                 PER DIEM RATE:  [9]
                   PRINT CHECK:  [10]
      TRANS TYPE – OBLIGATION:  [11]
         TRANS TYPE – ADVANCE:  [12]
```

Figure 8:82. Travel Default Values Table (TDFT)

9 **Per Diem Rate** (*conditional, numeric field; 14 positions*). If the Default Active (**Field 5**) is ***Y***, key in a per diem rate default value. Blanks are accepted as a default value. The default field value is used by the travel order.

10 **Print Check** (*conditional, alpha field; 1 position*). If the Default Active (**Field 5**) is ***Y***, key in a print check default value. Blanks are accepted as a default value. The default field value is used by the travel order.

11 **Trans Type - Obligation** (*conditional, alpha field; 2 positions*). If the Default Active (**Field 5**) is ***Y***, key in a transaction type obligation default value. Blanks are accepted as a default value. The default field value is used by the travel order.

12 **Trans Type - Advance** (*conditional, alpha field; 2 positions*). If the Default Active (**Field 5**) is ***Y***, key in a transaction type advance default value. Blanks are accepted as a default value. The default field value is used by the travel order.

After keying in the data, press [Enter]. All records (lines) that are error-free or tagged with warning messages are added; records that contain either overrideable or fatal errors are not added. The message *All Lines Changed* is displayed at the bottom of the screen to indicate that all or some records have been added; if any records contain errors, error messages are also displayed. For more information about error messages and correcting errors, see **Part 2, System Edits**.

- To change another record, repeat the above process.

Performing Other Actions. For instructions on displaying a record, or performing any other action, see **Part 2, Using Tables**.

Travel Expense Type Match Reference Table (TETM)

The TETM is used to:

- Record and display the valid combinations of fiscal year, budget object code, travel type, and description code that may be used in travel documents.
- Ensure that the description code is appropriate for the budget object code and travel type.

Note: This table is only used if the BOC-Travel Type-Description Match Option (**Field 5**) in the TSPC is **Y**.

To access the TETM, at the FFS screen, key in ***N*** at the Action field and ***TETM*** at the TableID field, then press [Enter]. The TETM screen (**Figure 8:83**) is displayed with an ***S*** in the Action field.

Instructions for adding are discussed below.

Note: If you are not authorized to perform a specific processing action (adding, changing, or deleting a record) in this table, contact your Functional Administrator responsible for Table Maintenance.

Adding A Record. At the TETM screen, complete the fields as follows:

[1] **Action** (*required, alpha field; 1 position*). Key in ***A***.

[2] **TableID** (*no-entry*). Displays ***TETM***.

[3] **UserID** (*no-entry*). Displays the user ID.

[4] **Fiscal Year** (*required, numeric field; 2 positions)*. Key in the last 2 digits of the appropriate fiscal year.

[5] **Budget Object Code** (*required, numeric field; 4 positions*). Key in the budget object code for the object of expense.

[6] **Travel Type** (*required, alphanumeric field; 3 positions*). Key in the code for the applicable travel type. See the TTYP for valid travel types.

[7] **Description Code** (*required, alpha field; 1 position*). Key in code that best describes the nature of the expense. See the TDES for valid travel description codes.

After keying in the data, press [Enter]. All records (lines) that are error-free or tagged with warning messages are added; records that contain either overrideable or fatal errors are not added. The message *All Lines Added* is displayed at the bottom of the screen to indicate that all or some records have been added; if any records contain errors, error messages are also displayed. For more information about error messages and correcting errors, see **Part 2, System Edits**.

- To add another record, repeat the above process.

Performing Other Actions. For instructions on displaying, changing, and deleting a record, or performing any other action, see **Part 2, Using Tables**.

```
ACTION: S  [1] TABLEID: TETM  [2] USERID: NFxx  [3]
TRAVEL EXPENSE TYPE MATCH REFERENCE TABLE
KEY IS ALL

              BUDGET
    FISC      OBJECT          TRAVEL          DESCRIPTION
    YEAR       CODE            TYPE             CODE
    ----      ------          ------          -----------
01- [4]         [5]             [6]              [7]
02-
03-
04-
05-
06-
07-
08-
09-
10-
11-
12-
13-
```

Figure 8:83. Travel Expense Type Match Reference Table (TETM)

Travel Mode Reference Table (TMOD)

The TMOD is used to define valid travel mode codes and their descriptions.

To access the TMOD, at the FFS screen, key in ***N*** at the Action field and ***TMOD*** at the TableID field, then press [Enter]. The TMOD screen (**Figure 8:84**) is displayed with an ***S*** in the Action field.

Instructions for adding are discussed below.

Note: If you are not authorized to perform a specific processing action (adding, changing, or deleting a record) in this table, contact your Functional Administrator responsible for Table Maintenance.

Adding A Record. At the TMOD screen, complete the fields as follows:

[1] **Action** (*required, alpha field; 1 position*). Key in ***A***.

[2] **TableID** (*no-entry*). Displays ***TMOD***.

[3] **UserID** (*no-entry*). Displays the user ID.

[4] **Fiscal Year** (*required, numeric field; 2 positions)*. Key in the last 2 digits of the appropriate fiscal year.

[5] **Travel Mode** (*required, alphanumeric field; 1 position*). Key in the code indicating the mode of travel. Suggested values are:

A = Airplane
B = Bus
C = Air & bus
E = Bus & train
F = Air, bus, & train
M = Miscellaneous
O = Other
P = Cost comparison
T = Train
V = Voluntary return

[6] **Travel Mode Name** (*optional, alphanumeric field; 30 positions*). Key in the name of the travel mode.

[7] **Travel Mode Short Name** (*optional, alphanumeric field; 12 positions*). Key in the name of the travel mode that you want to appear in the travel order when there is not enough room for the full name.

[8] **Description** (*optional, alphanumeric field; 60 positions*). Key in text to be printed on travel orders in the text block. This field is generally used to print messages concerning restrictions for a particular travel mode.

```
ACTION: S  [1] TABLEID: TMOD  [2] USERID: NFxx  [3]
TRAVEL MODE REFERENCE TABLE
KEY IS FISCAL YEAR, TRAVEL MODE

FISCAL YEAR:   [4]

      TRAVEL                                    TRAVEL MODE
      MODE           TRAVEL MODE NAME            SHORT NAME
     -------    ------------------------------ --------------
01-    [5]                  [6]                    [7]
     DESCRIPTION:    [8]
02-
     DESCRIPTION:
03-
     DESCRIPTION:
04-
     DESCRIPTION:
05-
     DESCRIPTION:
06-
     DESCRIPTION:
```

Figure 8:84. Travel Mode Reference Table (TMOD)

After keying in the data, press [Enter]. All records (lines) that are error-free or tagged with warning messages are added; records that contain either overrideable or fatal errors are not added. The message *All Lines Added* is displayed at the bottom of the screen to indicate that all or some records have been added; if any records contain errors, error messages are also displayed. For more information about error messages and correcting errors, see **Part 2, System Edits**.

- To add another record, repeat the above process.

Performing Other Actions. For instructions on displaying, changing, and deleting a record, or performing any other action, see **Part 2, Using Tables**.

To/From Code Reference Table (TOFM)

The TOFM is used to identify valid user-defined to/from codes and the person responsible for specific document tracking activities.

To access the TOFM, at the FFS screen, key in ***N*** at the Action field and ***TOFM*** at the TableID field, then press [Enter]. The TOFM screen (**Figure 8:85**) is displayed with an ***S*** in the Action field.

Instructions for adding are discussed below.

Note: If you are not authorized to perform a specific processing action (adding, changing, or deleting a record) in this table, contact your Functional Administrator responsible for Table Maintenance.

Adding A Record. At the TOFM screen, complete the fields as follows:

[1] **Action** *(required, alpha field; 1 position)*. Key in ***A***.

[2] **TableID** (*no-entry*). Displays ***TOFM***.

[3] **UserID** (*no-entry*). Displays the user ID.

[4] **To/From Code** 🔑 *(required, alphanumeric field; 4 positions)*. Key in a code defining the to/from person or location.

[5] **Responsible Person Name** *(optional, alphanumeric field; max. of 30 positions)*. Key in the person's or group's name responsible for the document.

After keying in the data, press [Enter]. All records (lines) that are error-free or tagged with warning messages are added; records that contain either overrideable or fatal errors are not added. The message *All Lines Added* is displayed at the bottom of the screen to indicate that all or some records have been added; if any records contain errors, error messages are also displayed. For more information about error messages and correcting errors, see **Part 2, System Edits**.

- To add another record, repeat the above process.

Performing Other Actions. For instructions on displaying, changing, and deleting a record, or performing any other action, see **Part 2, Using Tables**.

```
ACTION: S [1]  TABLEID: TOFM [2]  USERID: NFxx [3]
TO/FROM CODE REFERENCE TABLE
KEY IS TO/FROM CODE

              TO/FROM CODE        RESPONSIBLE PERSON NAME
              ------------     ------------------------------
01-               [4]                    [5]
02-
03-
04-
05-
06-
07-
08-
09-
10-
11-
12-
13-
14-
15-
```

Figure 8:85. To/From Code Reference Table (TOFM)

PRCH Third Party Assignment Table (TPAT)

The TPAT is used to store all third party vendor (such as a bank or the IRS) assignments alternate address code, name, and address.

To access the TPAT, at the FFS screen, key in ***N*** at the Action field and ***TPAT*** at the TableID field, then press [Enter]. The TPAT screen (**Figure 8:86**) is displayed with an ***S*** in the Action field.

Instructions for adding are discussed below.

Note: If you are not authorized to perform a specific processing action (adding, changing, or deleting a record) in this table, contact your Functional Administrator responsible for Table Maintenance.

Adding A Record. At the TPAT screen, complete the fields as follows:

[1] **Action** *(required, alpha field; 1 position)*. Key in ***A***.

[2] **TableID** (*no-entry*). Displays ***TPAT***.

[3] **UserID** (*no-entry*). Displays the user ID.

[4] **Prch PO Number** 🔑 *(required, alphanumeric field; 12 positions)*. Key in the purchase order number.

[5] **FFIS Vendor Code** *(optional, alphanumeric field; 11 positions)*. Key in the vendor code.

[6] **Name** (*no-entry*). Displays the name.

[7] **Address Code** *(optional, alphanumeric field; 1 position)*. Key in the third party's address code. (Alternate address indicators ***T*** - ***Z*** are reserved for third party assignments.)

[8] **Name** (*no-entry*). Displays the third party's name.

[9] **Address 1** (*no-entry*). Displays the first line of the third party's address.

[10] **Address 2** (*no-entry*). Displays the second line of the third party's address.

[11] **Address 3** (*no-entry*). Displays the last line of the third party's address.

[12] **Date Assigned** *(optional, numeric field; 6 positions)*. Key in the date assigned.

[13] **Date Received** *(optional, numeric field; 6 positions)*. Key in the date received.

[14] **Date Entered** *(optional, numeric field; 6 positions)*. Key in the date entered.

[15] **Entered By** *(optional, alphanumeric field; max. of 8 positions)*. Key in the person's or group's name responsible for the document.

```
ACTION: S [1]  TABLEID: TPAT [2] USERID: NFxx [3]
PRCH THIRD PARTY ASSIGNMENT TABLE
KEY IS PRCH PO NUMBER

   PRCH PO NUMBER: [4]
 FFIS VENDOR CODE: [5]          NAME: [6]

***************************** ASSIGNEE INFORMATION *************************

    ADDRESS CODE: [7]
            NAME: [8]
       ADDRESS 1: [9]
               2: [10]
               3: [11]

   DATE ASSIGNED: [12]  /     /     DATE RECEIVED: [13] /     /
   DATE ENTERED : [14]  /     /     ENTERED BY:    [15]
```

Figure 8:86. PRCH Third Party Assignment Table (TPAT)

After keying in the data, press [Enter]. All records (lines) that are error-free or tagged with warning messages are added; records that contain either overrideable or fatal errors are not added. The message *All Lines Added* is displayed at the bottom of the screen to indicate that all or some records have been added; if any records contain errors, error messages are also displayed. For more information about error messages and correcting errors, see **Part 2, System Edits**.

- To add another record, repeat the above process.

Performing Other Actions. For instructions on displaying, changing, and deleting a record, or performing any other action, see **Part 2, Using Tables**.

Travel Purpose Reference Table (TPRP)

The TPRP is used to define valid travel purpose codes and indicate whether or not each code represents classified travel.

To access the TPRP, at the FFS screen, key in ***N*** at the Action field and ***TPRP*** at the TableID field, then press [Enter]. The TPRP screen (**Figure 8:87**) is displayed with an ***S*** in the Action field.

Instructions for adding are discussed below.

Note: If you are not authorized to perform a specific processing action (adding, changing, or deleting a record) in this table, contact your Functional Administrator responsible for Table Maintenance.

Adding A Record. At the TPRP screen, complete the fields as follows:

[1] **Action** (*required, alpha field; 1 position*). Key in ***A***.

[2] **TableID** (*no-entry*). Displays ***TPRP***.

[3] **UserID** (*no-entry*). Displays the user ID.

[4] **Fiscal Year** (*required, numeric field; 2 positions)*. Key in the last 2 digits of the appropriate fiscal year.

[5] **Travel Purpose** (*required, alphanumeric field; 1 position*). Key in the code identifying the travel purpose. Suggested values are:

- ***C*** = Conference
- ***E*** = Emergency
- ***H*** = Home leave
- ***J*** = R-employment
- ***M*** = Information meeting
- ***R*** = Relocation
- ***T*** = Training
- ***X*** = Classified
- ***1*** = Site visit
- ***2*** = Information meeting
- ***3*** = Training attendee
- ***4*** = Speech & presentation
- ***5*** = Conference attendee

[6] **Travel Purpose Name** (*optional, alphanumeric field; 30 positions*). Key in the name/description of the travel purpose code.

[7] **Travel Purpose Short Name** (*optional, alphanumeric field; 12 positions*). Key in the name/description of the travel purpose to appear in the reports when there is not enough room for the full name.

[8] **Classified** (*required, alpha field; 1 position*). If this travel purpose is classified, key in ***Y***. If this travel purpose is not classified, key in ***N***.

```
ACTION: S [1] TABLEID: TPRP [2] USERID: NFxx [3]
TRAVEL PURPOSE REFERENCE TABLE
KEY IS FISCAL YEAR, TRAVEL PURPOSE

FISCAL YEAR:  [4]

      TRAVEL                                    TRAVEL PURPOSE
      PURPOSE        TRAVEL PURPOSE NAME          SHORT NAME   CLASSIFIED
      -------    ------------------------------ -------------- ----------
01-     [5]              [6]                         [7]          [8]
02-
03-
04-
05-
06-
07-
08-
09-
10-
11-
12-
```

Figure 8:87. Travel Purpose Reference Table (TPRP)

After keying in the data, press [Enter]. All records (lines) that are error-free or tagged with warning messages are added; records that contain either overrideable or fatal errors are not added. The message *All Lines Added* is displayed at the bottom of the screen to indicate that all or some records have been added; if any records contain errors, error messages are also displayed. For more information about error messages and correcting errors, see **Part 2, System Edits**.

- To add another record, repeat the above process.

Performing Other Actions. For instructions on displaying, changing, and deleting a record, or performing any other action, see **Part 2, Using Tables**.

Treasury Schedule Control Header Table (TSCH)

The TSCH is used to record Treasury's confirmation of a schedule and show the current status of a schedule.

To access the TSCH, at the FFS screen, key in ***N*** at the Action field and ***TSCH*** at the TableID field, then press [Enter]. The TSCH screen (**Figure 8:88**) is displayed with an ***S*** in the Action field.

Instructions for adding are discussed below.

Note: If you are not authorized to perform a specific processing action (adding, changing, or deleting a record) in this table, contact your Functional Administrator responsible for Table Maintenance.

Adding A Record. At the TSCH screen, complete the fields as follows:

[1] **Action** *(required, alpha field; 1 position)*. Key in ***A***.

[2] **TableID** *(no-entry)*. Displays ***TSCH***.

[3] **UserID** *(no-entry)*. Displays the user ID.

[4] **Fiscal Year** *(required, numeric field; 2 positions)*. Key in the last 2 digits of the applicable fiscal year.

[5] **Sched Cat** *(required, alpha field; 1 position)*. Key in one of the following codes that identifies the schedule category:

- ***T*** = Automated Treasury tape check schedule
- ***A*** = ACH schedule
- ***S*** = Automated TFCS schedule
- ***M*** = Manual schedule

[6] **Sched Type** *(required, alpha field; 1 position)*. Key in one of the following codes that identifies the type of schedule:

- ***M*** = Miscellaneous
- ***T*** = Transportation

[7] **Agency Sched #** *(required, alpha field; 9 positions)*. Key in the agency-assigned schedule number.

[8] **Treas Act Indicator** *(required, alpha field; 1 position)*. Key in ***C*** to represent the action taken by Treasury when confirming a schedule. To reject a schedule, use the TSCR.

[9] **Post Treas Act Indicator** *(no-entry)*. Displays one of the following indicators:

- ***Y*** = The Treasury Reconciliation process has posted confirmation accounting entries for this schedule.
- ***N*** = The Treasury has posted confirmation accounting entries for this schedule.

[10] **Post Dtls Indicator** *(no-entry)*. Displays ***Y*** if the Treasury Reconciliation process has posted detail vouchers for this schedule. This field is set to ***Y*** when any detail voucher is posted. The schedule is completely processed when the Post Treasury Action flag is ***Y***, the Post Details flag is ***Y***, and the Expended flag is ***F***.

[11] **Exp Indicator** *(no-entry)*. Displays ***N*** when no action has been taken against the schedule. When the vouchered amount is equal to the confirmed amount, it is set to ***F*** (final). Otherwise, it is set to ***P*** (partially expended).

```
ACTION: S [1]  TABLEID: TSCH [2]  USERID: NFxx [3]
                *** TREASURY SCHEDULE CONTROL HEADER TABLE ***
KEY IS FISCAL YEAR, SCHED CAT, SCHED TYPE, AGENCY SCHED #
01-
    FISCAL YEAR: [4]  SCHED CAT: [5] SCHED TYPE: [6]  AGENCY SCHED #: [7]
    INDICATORS -  TREAS ACT: [8] POST TREAS ACT: [9] POST DTLS: [10] EXP: [11] BACKOUT: [12]
    DATE SUB:  [13]      CNF/REJ DATE: [14]       PRE-PRINTED NUMBER: [15]
    VOUCHERED AMT: [16]                      CONF/REJ AMT:  [17]
    D.O: [18]   CHECK RANGE:  [19]      -          NUMBER OF PAYMENTS: [20]
    ACCT PERIOD: [21]
02-
    FISCAL YEAR:     SCHED CAT:    SCHED TYPE:    AGENCY SCHED #:
    INDICATORS -  TREAS ACT:   POST TREAS ACT:   POST DTLS:   EXP:   BACKOUT:
    DATE SUB:          CNF/REJ DATE:          PRE-PRINTED NUMBER:
    VOUCHERED AMT:                          CONF/REJ AMT:
    D.O:      CHECK RANGE:          -          NUMBER OF PAYMENTS:
    ACCT PERIOD:
```

Figure 8:88. Treasury Schedule Control Header Table (TSCH)

12 **Backout Indicator** *(conditional, alpha field; 1 position)*. If the Treasury Reconciliation program backs outs the confirmation updates associated with this schedule, key in ***Y***. When the backout is accomplished, the Treasury Reconciliation replaces this indicator with ***A*** (backout accomplished). The Treasury Reconciliation program does not reprocess this schedule until the backout indicator is changed to ***N***. The indicator is reset to ***N*** by any change to the TSCH (either an update to the TSCH directly, or by a voucher updating this schedule record). When the TSCH record is established, the indicator is set to ***N***.

13 **Date Sub** *(optional, numeric field; 6 positions)*. Key in the date on which this record was created.

14 **Cnf/Rej Date** *(required, numeric field; 6 positions)*. Key in the date of the Treasury confirmation or rejection. If entered, it cannot be greater than the system date, and the accounting period fiscal year associated with the date cannot be less than the fiscal year of the schedule. When Treasury Reconciliation is run, the confirm date is recorded as the check date and accomplished date (for SF–224 processing).

15 **Pre-Printed Number** *(optional, alphanumeric field; 11 positions)*. Key in the Treasury schedule number for the schedule.

16 **Vouchered Amt** *(no-entry)*. Displays the total voucher amount for all vouchers which have been processed in the schedule.

17 **Conf/Rej Amt** *(required, numeric field; 19 positions)*. Key in the amount of the schedule as confirmed or rejected by Treasury.

18 **D.O.** *(required, alphanumeric field; 4 positions)*. Key in the code of the disbursing office for the schedule.

19 **Check Range** *(required, numeric field; 16 positions)*. Key in the check number range that Treasury assigned to the payments made on the schedule. The check range may not indicate a number of checks less than the number of payments determined by the vouchers associated with this schedule. If entering confirmation of an EFT schedule (category ***A*** or ***S***), entry in this field is not allowed.

20 **Number Of Payments** *(no-entry)*. Displays the total number of payments processed by the system for the schedule.

21 **Acct Period** *(optional, numeric field; 4 positions)*. Key in a valid accounting period to be used by the Treasury Reconciliation process as an override of the parameter value.

After keying in the data, press [Enter]. All records (lines) that are error-free or tagged with warning messages are added; records that contain either overrideable or fatal errors are not added. The message *All Lines Added* is displayed at the bottom of the screen to indicate that all or some records have been added; if any records contain errors, error messages are also displayed. For more information about error messages and correcting errors, see **Part 2, System Edits**.

- To add another record, repeat the above process.

Performing Other Actions. For instructions on displaying, changing, and deleting a record, or performing any other action, see **Part 2, Using Tables**.

Treasury Schedule Control Rejection Reference Table (TSCR)

The TSCR is used to record Treasury's rejection of a schedule.

To access the TSCR, at the FFS screen, key in ***N*** at the Action field and ***TSCR*** at the TableID field, then press [Enter]. The TSCR screen (**Figure 8:89**) is displayed with an ***S*** in the Action field.

Instructions for adding are discussed below.

Note: If you are not authorized to perform a specific processing action (adding, changing, or deleting a record) in this table, contact your Functional Administrator responsible for Table Maintenance.

Adding A Record. At the TSCR screen, complete the fields as follows:

1 **Action** *(required, alpha field; 1 position)*. Key in ***A***.

2 **TableID** *(no-entry)*. Displays ***TSCR***.

3 **UserID** *(no-entry)*. Displays the user ID.

4 **Fiscal Year** *(required, numeric field; 2 positions)*. Key in the last 2 digits of the applicable fiscal year.

5 **Schedule Cat** *(required, alpha field; 1 position)*. Key in one of the following codes that identifies the schedule category:

T = Automated Treasury tape check schedule
A = ACH schedule
S = Automated TFCS schedule
M = Manual schedule

6 **Schedule Typ** *(required, alpha field; 1 position)*. Key in one of the following codes that identifies the type of schedule:

M = Manual schedule
T = Transportation

7 **Agency Schd No** *(required, alpha field; 9 positions)*. Key in the agency-assigned schedule number.

8 **Treas Act Indicator** *(conditional, alpha field; 1 position)*. If rejecting a schedule, key in ***R***. Confirmations must be entered in the TSCH. If left blank, the system defaults to ***N***.

9 **Post Treas Act Indicator** *(no-entry)*. Displays ***Y*** if the Treasury Reconciliation process has posted confirmation accounting entries for this schedule.

10 **Post Dtls Indicator** *(no-entry)*. Displays ***Y*** if the Treasury Reconciliation process has posted detail vouchers for this schedule. This field is set to ***Y*** when any detail voucher is posted. The schedule is completely processed when the Post Treasury Action flag is ***Y***, the Post Details flag is ***Y***, and the Expended flag is ***F***.

11 **Exp Indicator** *(no-entry)*. Displays ***F*** (final) when the vouchered amount is equal to the confirmed amount. Otherwise, displays ***P*** (partially expended).

```
ACTION: S [1] TABLEID: TSCR [2] USERID:NFxx [3]
TREASURY SCHEDULE CONTROL REJECTION REFERENCE TABLE
KEY IS FISCAL YEAR, SCHEDULE CAT, SCHEDULE TYP, AGENCY SCHD NO
01-
    FISCAL YEAR:[4] SCHEDULE CAT:[5] SCHEDULE TYP:[6] AGENCY SCHD NO:[7]
    INDICATORS -  TREAS ACT:[8] POST TREAS ACT:[9] POST DTLS:[10] EXP:[11] BACKOUT:[12]
    DATE SUB: [13]      CNF/REJ DATE: [14]      PRE-PRINTED NUMBER: [15]
    VOUCHERED AMT: [16]                    CONF/REJ AMT: [17]
    D.O: [18]  CHECK RANGE: [19]      -          NUMBER OF PAYMENTS: [20]
02-
    FISCAL YEAR:    SCHEDULE CAT:   SCHEDULE TYP:   AGENCY SCHD NO:
    INDICATORS -  TREAS ACT:   POST TREAS ACT:   POST DTLS:   EXP:   BACKOUT:
    DATE SUB:          CNF/REJ DATE:          PRE-PRINTED NUMBER:
    VOUCHERED AMT:                         CONF/REJ AMT:
    D.O:      CHECK RANGE:          -          NUMBER OF PAYMENTS:
03-
    FISCAL YEAR:    SCHEDULE CAT:   SCHEDULE TYP:   AGENCY SCHD NO:
    INDICATORS -  TREAS ACT:   POST TREAS ACT:   POST DTLS:   EXP:   BACKOUT:
    DATE SUB:          CNF/REJ DATE:          PRE-PRINTED NUMBER:
    VOUCHERED AMT:                         CONF/REJ AMT:
    D.O:      CHECK RANGE:          -          NUMBER OF PAYMENTS:
```

Figure 8:89. Treasury Schedule Control Rejection Reference Table (TSCR)

12 **Backout Indicator** *(optional, alpha field; 1 position)*. If you want the Treasury Reconciliation program to backout the confirmation updates associated with this schedule, key in ***Y***. When the backout is accomplished, the Treasury Reconciliation replaces this indicator with ***A*** (backout accomplished). The Treasury Reconciliation program does not reprocess this schedule until the backout indicator is changed to ***N***. The indicator is reset to ***N*** by any change to the TSCH (either an update to the TSCH directly, or by a voucher updating this schedule record). When the TSCH record is established, the indicator is set to ***N***.

13 **Date Sub** *(no-entry)*. Displays the date on which the TSCH record was created.

14 **Cnf/Rej Date** *(conditional, numeric field; 6 positions)*. If the Accomplished Date Required flag in the DOPT is ***Y***, key in the date of the Treasury confirmation or rejection. It cannot be greater than the system date. When Treasury Reconciliation is run, the confirm date is recorded as the check date and accomplished date (for SF–224 processing).

15 **Pre-Printed Number** *(optional, alphanumeric field; 11 positions)*. Key in the Treasury schedule number for the schedule. If entered, and Document Tracking updates are specified, the Document Tracking tables are updated.

16 **Vouchered Amt** *(no-entry)*. Displays the total voucher amount for all vouchers which have been processed in the schedule.

17 **Conf/Rej Amt** *(required, numeric field; max. of 19 positions)*. Key in the amount of the schedule rejected by Treasury.

18 **D.O.** *(conditional, alphanumeric field; 4 positions)*. If adding a new entry, key in the code of the disbursing office for the schedule.

19 **Check Range** *(conditional, numeric field; 16 positions)*. If recording Treasury confirmation of a schedule, key in the check number range that Treasury assigned to the payments made on the schedule. The check range may not indicate a number of checks less than the number of payments determined by the vouchers associated with this schedule.

20 **Number Of Payments** *(no-entry)*. Displays the total number of payments processed by the system for the schedule.

After keying in the data, press [Enter]. All records (lines) that are error-free or tagged with warning messages are added; records that contain either overrideable or fatal errors are not added. The message *All Lines Added* is displayed at the bottom of the screen to indicate that all or some records have been added; if any records contain errors, error messages are also displayed. For more information about error messages and correcting errors, see **Part 2, System Edits**.

- To add another record, repeat the above process.

Performing Other Actions. For instructions on displaying, changing, and deleting a record, or performing any other action, see **Part 2, Using Tables**.

Travel Special Options Reference Table (TSPC)

The TSPC is used to establish the special options to be used in controlling travel processing.

To access the TSPC, at the FFS screen, key in ***N*** at the Action field and ***TSPC*** at the TableID field, then press [Enter]. The TSPC screen (**Figure 8:90**) is displayed with an ***S*** in the Action field.

Instructions for adding are discussed below.

Note: If you are not authorized to perform a specific processing action (adding, changing, or deleting a record) in this table, contact your Functional Administrator responsible for Table Maintenance.

Adding A Record. At the TSPC screen, complete the fields as follows:

[1] **Action** (*required, alpha field; 1 position*). Key in ***A***.

[2] **TableID** (*no-entry*). Displays ***TSPC***.

[3] **UserID** (*no-entry*). Displays the user ID.

[4] **Fiscal Year** (*required, numeric field; 2 positions)*. Key in the last 2 digits of the appropriate fiscal year.

[5] **BOC - Travel Type - Description Match Option** (*conditional, alpha field; 1 position*). If all travel orders require that the combination of BOC, travel type, and travel description is valid in the TETM, key in ***Y***.

[6] **Per Diem Maximum Amount** (*optional, numeric field; 19 positions*). Key in the maximum per diem amount for all travel orders.

[7] **Advance Date Tolerance** (*optional, numeric field; 3 positions*). Key in the number of days before a travel assignment has begun that an advance may still be requested and paid.

[8] **Voucher Date Tolerance** (*optional, numeric field; 3 positions*). Key in the number of days after a travel assignment has expired that a voucher may still be submitted for payment.

[9] **Period Of Delay For Default Paymt Date** (*optional, numeric field; 3 positions*). Key in the number of days to delay disbursement of an advance payment after the advance request has been processed.

[10] **Obligation Advancable Percent** (*required, numeric field; 3 positions*). Key in the percent, without a decimal place (i.e., ***100*** = all, ***050*** = half), of first party obligations that are advancable to the employee. When issuing a travel advance against a TO, the maximum advance amount is calculated as this percent multiplied by the sum of all obligation lines whose travel description's advance flag is ***Y*** in the TDES.

```
ACTION: S  [1] TABLEID: TSPC   [2] USERID: NFxx  [3]
TRAVEL SPECIAL OPTIONS REFERENCE TABLE
KEY IS FISC YEAR

                                    FISCAL YEAR:  [4]
    BOC - TRAVEL TYPE – DESCRIPTION MATCH OPTION:  [5]
                        PER DIEM MAXIMUM AMOUNT:  [6]
                         ADVANCE DATE TOLERANCE:  [7]
                         VOUCHER DATE TOLERANCE:  [8]
          PERIOD OF DELAY FOR DEFAULT PAYMT DATE:  [9]
                   OBLIGATION ADVANCABLE PERCENT:  [10]
                        TICKET PROCESSING OPTION:  [11]
```

Figure 8:90. Travel Special Options Reference Table (TTYP)

11 **Ticket Processing Option** (*optional default, alpha field; 1 position*). Key in ***N, U,*** or ***R***, as described below. This indicates how the ticket and GTR tables are updated.

- ***N*** = If no updates are performed and the ticket and GTR tables are not used.
- ***U*** = If the tables are updated when the ticket number is entered; however, ticket and GTR numbers are optional.
- ***R*** = If reconcile, then the ticket number must always be entered and special edits are permitted to the ticket and GTR tables using the TKTR. The sum of all paid and vouchered amounts in the TCKT must equal the total paid and vouchered in the system.

If left blank, the system defaults to ***U***.

After keying in the data, press [Enter]. All records (lines) that are error-free or tagged with warning messages are added; records that contain either overrideable or fatal errors are not added. The message *All Lines Added* is displayed at the bottom of the screen to indicate that all or some records have been added; if any records contain errors, error messages are also displayed. For more information about error messages and correcting errors, see **Part 2, System Edits**.

- To add another record, repeat the above process.

Performing Other Actions. For instructions on displaying, changing, and deleting a record, or performing any other action, see **Part 2, Using Tables**.

Treasury Fund Reference Table (TSYF)

The TSYF is used to create Treasury symbols and display total budgetary resources by fund within appropriation symbol.

To access the TSYF, at the FFS screen, key in ***N*** at the Action field and ***TSYF*** at the TableID field, then press [Enter]. The TSYF screen (**Figure 8:91**) is displayed with an ***S*** in the Action field.

Instructions for adding are discussed below.

Note: If you are not authorized to perform a specific processing action (adding, changing, or deleting a record) in this table, contact your Functional Administrator responsible for Table Maintenance.

Adding A Record. At the TSYF screen, complete the fields as follows:

[1] **Action** *(required, alpha field; 1 position)*. Key in ***A***.

[2] **TableID** (*no-entry*). Displays ***TSYF***.

[3] **UserID** (*no-entry*). Displays the user ID.

[4] **Treasury Symbol** (*required, alphanumeric field; 15 positions*). Key in the Treasury symbol. This field is created as an entry and is added/modified in the FSYM.

[5] **FY** (*optional default, numeric field; 2 positions*). Key in the fiscal year. This field retrieves information corresponding to the value entered. If left blank, the system defaults to the current fiscal year.

[6] **Screen Total** (*no-entry*). Displays the total of all budgetary resources that appear on the screen.

[7] **Total By Treasury Symbol** (*no-entry*). Displays the total of all budgetary resources associated with the Treasury symbol which may span several screens. This total is displayed only on the last screen associated with a particular Treasury symbol.

[8] **BFYs (Unoblig Balance Brought Forward)** (*required, numeric field; 2 positions*). Key in the budget fiscal year. This field is created as an entry and is added/modified in the FSYM.

[9] **Fund (Unoblig Balance Brought Forward)** (*required, numeric field; max. of 3 positions*). Key in the fund. This field is created as an entry and is added/modified in the FSYM.

[10] **Anticipated Reimbursements** (*no-entry*). Displays the estimated receipt amount stored in the FAPP.

[11] **Other Budgetary Resources** (*no-entry*). Displays the approved apportionment amount stored in the FAPP.

```
ACTION: S [1]   TABLEID: TSYF[2]   USERID: NFxx[3]
H-  TREASURY FUND REFERENCE TABLE
    KEY IS TREASURY SYMBOL, BFYS, FUND

    TREASURY SYMBOL: [4]                FY: [5]SCREEN TOTAL: [6]

                                   TOTAL BY TREASURY SYMBOL: [7]

      UNOBLIG BALANCE      ANTICIPATED      OTHER BUDGETARY    TOTAL BUDGETARY
      BROUGHT FORWARD    REIMBURSEMENTS        RESOURCES          RESOURCES
     -----------------  -----------------  -----------------  -----------------
01- BFYS: [8]    FUND: [9]
                              [10]                [11]                [12]
02- BFYS:        FUND:

03- BFYS:        FUND:

04- BFYS:        FUND:

05- BFYS:       FUND:
```

Figure 8:91. Treasury Fund Reference Table (TSYF)

12 **Total Budgetary Resources** (*no-entry*). Displays the sum of the Unobligated Balance Brought Forward, Anticipated Reimbursements, and Other Budgetary Resources for the Budget Fiscal Year/Fund entry.

After keying in the data, press [Enter]. All records (lines) that are error-free or tagged with warning messages are added; records that contain either overrideable or fatal errors are not added. The message *All Lines Added* is displayed at the bottom of the screen to indicate that all or some records have been added; if any records contain errors, error messages are also displayed. For more information about error messages and correcting errors, see **Part 2, System Edits**.

- To add another record, repeat the above process.

Performing Other Actions. For instructions on displaying, changing, and deleting a record, or performing any other action, see **Part 2, Using Tables**.

Treasury Symbol Reference Table (TSYM)

The TSYM is used to translate the Treasury symbol in the FUND into the Treasury symbol used for the Year-End Closing Statement (TFS 2108) and the SF-224 Statement Of Transactions. This table allows records recorded in the accounting year being closed to retain their individual budget year identity, while at the same time, records recorded for the same fund in the new accounting year may be included only in the "M" account.

To access the TSYM, at the FFS screen, key in ***N*** at the Action field and ***TSYM*** at the TableID field, then press [Enter]. The TSYM screen (**Figure 8:92**) is displayed with an ***S*** in the Action field.

Instructions for adding are discussed below.

Note: If you are not authorized to perform a specific processing action (adding, changing, or deleting a record) in this table, contact your Functional Administrator responsible for Table Maintenance.

Adding A Record. At the TSYM screen, complete the fields as follows:

[1] **Action** (*required, alpha field; 1 position*). Key in ***A***.

[2] **TableID** (*no-entry*). Displays ***TSYM***.

[3] **UserID** (*no-entry*). Displays the user ID.

[4] **FY** (*required, numeric field; 2 positions)*. Key in the last 2 digits of the appropriate fiscal year.

[5] **Treasury Symbol** (*required, alphanumeric field; max. of 15 positions*). Key in the Treasury symbol as entered in the FUND.

[6] **First Year Merged** (*optional, alpha field; 1 position*). Key in ***Y*** for any fiscal year and fund combination if this is the first year this fund is to be included in the "M" account. This flag must be changed back to ***N*** before the next year's external reports are reproduced. Otherwise, key in ***N*** if this is not the first year this fund is to be included in the "M" account.

[7] **Lapse Ind** (*optional, alpha field; 1 position*). Key in ***Y*** if you wish this fiscal year and fund combination to be included in the calculation of the lapsed amount (TFS-2108, column 4). Key in ***N*** to ignore this fiscal year and fund combination in the lapsed amount calculation.

[8] **Reporting Treasury Symbol** (*optional, alphanumeric field; max. of 15 positions*). Key in the reporting Treasury symbol associated with this fiscal year and fund combination. The reporting Treasury symbol can be the same as the Treasury symbol.

[9] **Preclosing Unexpended Balance** (*optional, numeric field; max. of 19 positions*). Key in the dollar amount that represents the preclosing unexpended balance for this fiscal year and fund combination. The amount entered here will be used in column 2 of the TFS-2108. If you wish this amount to be determined by the External Reporting tables, enter the key word ***calculate***.

```
 ACTION: S [1]  TABLEID: TSYM  [2]  USERID: NFxx  [3]

TREASURY SYMBOL REFERENCE TABLE
KEY IS FY, TREASURY SYMBOL

                          FIRST YEAR  LAPSE    REPORTING          PRECLOSING
   FY  TREASURY SYMBOL      MERGED     IND   TREASURY SYMBOL  UNEXPENDED BALANCE
   -- ---------------  ----------  -----  --------------- --------------------
01-[4]   [5]               [6]     [7]        [8]              [9]
02-
03-
04-
05-
06-
07-
08-
09-
10-
11-
12-
13-
```

Figure 8:92. Treasury Symbol Reference Table (TSYM)

After keying in the data, press [Enter]. All records (lines) that are error-free or tagged with warning messages are added; records that contain either overrideable or fatal errors are not added. The message *All Lines Added* is displayed at the bottom of the screen to indicate that all or some records have been added; if any records contain errors, error messages are also displayed. For more information about error messages and correcting errors, see **Part 2, System Edits**.

- To add another record, repeat the above process.

Performing Other Actions. For instructions on displaying, changing, and deleting a record, or performing any other action, see **Part 2**, **Using Tables**.

Travel Type Reference Table (TTYP)

The TTYP is used to:

- Define valid travel type codes
- Indicate if travel orders using each travel type are issued centrally or decentrally, if a transfer authorization code is required, if a ticket can be charged against the travel type, and if tax can be withheld against the travel type.

To access the TTYP, at the FFS screen, key in ***N*** at the Action field and ***TTYP*** at the TableID field, then press [Enter]. The TTYP screen (**Figure 8:93**) is displayed with an ***S*** in the Action field.

Instructions for adding are discussed below.

Note: If you are not authorized to perform a specific processing action (adding, changing, or deleting a record) in this table, contact your Functional Administrator responsible for Table Maintenance.

Adding A Record. At the TTYP screen, complete the fields as follows:

[1] **Action** (*required, alpha field; 1 position*). Key in ***A***.

[2] **TableID** (*no-entry*). Displays ***TTYP***.

[3] **UserID** (*no-entry*). Displays the user ID.

[4] **Fiscal Year** (*required, numeric field; 2 positions)*. Key in the last 2 digits of the appropriate fiscal year.

[5] **Travel Type** (*required, alphanumeric field; 3 positions*). Key in the travel type.

ADV	=	Advance issuance
LOC	=	Local travel
PCS	=	Permanent change of station
TDY	=	Temporary duty (obl)

[6] **Travel Type Name** (*optional, alpha field; 20 positions*). Key in the name of the travel type (i.e., advance issuance, local travel, etc.)

[7] **Central** (*conditional, alpha field; 1 position*). If travel orders can be entered into the system with this travel type, key in ***Y***. If travel orders cannot be entered into the system with this travel type, key in ***N***. If this is a Travel Type that does not obligate for travel, key in ***N***.

[8] **Decentral** (*optional, alphanumeric field; 1 position*). If travel advances, vouchers, and invoices may reference a travel order of this type which has not been entered in FFS, key in ***Y***. If this is a Travel Type that does not obligate for travel, key in ***N***.

[9] **Transfer Of Station Code Reqd** (*conditional, numeric field; 1 position*). If the PCS authorization code is required for this travel type, key in ***Y***.

[10] **Ticket** (*conditional, numeric field; 1 position*). If a travel order of this type can authorize funds for tickets/GTRs, key in ***Y***.

[11] **Can Be Taxable** (*conditional, numeric field; 1 position*). If payments against this travel type may be taxable, key in ***Y***. If payments against this travel type are not taxable, key in ***N***. Travel voucher lines using a taxable travel type must include a tax code and may include taxes withheld.

```
ACTION: S   [1] TABLEID: TTYP    [2] USERID: NFxx    [3]
TRAVEL TYPE REFERENCE TABLE
KEY IS FISCAL YEAR, TRAVEL TYPE

FISCAL YEAR:  [4]
                                                TRANSFER
                                               OF STATION
    TRAVEL                                        CODE            CAN BE
    TYPE  TRAVEL TYPE NAME   CENTRAL  DECENTRAL  REQD   TICKET  TAXABLE
    ----  -----------------   -------  ---------  ------  ------  --------
01-  [5]   [6]                [7]      [8]        [9]     [10]    [11]
02-
03-
04-
05-
06-
07-
08-
09-
10-
```

Figure 8:93. Travel Type Reference Table (TTYP)

After keying in the data, press [Enter]. All records (lines) that are error-free or tagged with warning messages are added; records that contain either overrideable or fatal errors are not added. The message *All Lines Added* is displayed at the bottom of the screen to indicate that all or some records have been added; if any records contain errors, error messages are also displayed. For more information about error messages and correcting errors, see **Part 2, System Edits**.

- To add another record, repeat the above process.

Performing Other Actions. For instructions on displaying, changing, and deleting a record, or performing any other action, see **Part 2, Using Tables**.

Text Type Reference Table (TXTP)

The TXTP is used to relate a text type to one or more text clauses in the CLTX. The table predefines a relationship among multiple clauses commonly used in documents.

To access the TXTP, at the FFS screen, key in ***N*** at the Action field and ***TXTP*** at the TableID field, then press [Enter]. The TXTP screen (**Figure 8:94**) is displayed with an ***S*** in the Action field.

Instructions for adding are discussed below.

Note: If you are not authorized to perform a specific processing action (adding, changing, or deleting a record) in this table, contact your Functional Administrator responsible for Table Maintenance.

Adding A Record. At the TXTP screen, complete the fields as follows:

1 **Action** *(required, alpha field; 1 position)*. Key in ***A***.

2 **TableID** (*no-entry*). Displays ***TXTP***.

3 **UserID** (*no-entry*). Displays the user ID.

4 **Text Type** 🔑 *(required, alphanumeric field; 2 positions)*. Key in a text type reference.

5 **Clause Number** 🔑 *(required, numeric field; 2 positions)*. Key in a number identifying a text clause from the CLTX.

6 **Description** *(optional, alphanumeric field; max. of 30 positions)*. Key in a description of the text type.

After keying in the data, press [Enter]. All records (lines) that are error-free or tagged with warning messages are added; records that contain either overrideable or fatal errors are not added. The message *All Lines Added* is displayed at the bottom of the screen to indicate that all or some records have been added; if any records contain errors, error messages are also displayed. For more information about error messages and correcting errors, see **Part 2, System Edits**.

- To add another record, repeat the above process.

Performing Other Actions. For instructions on displaying, changing, and deleting a record, or performing any other action, see **Part 2, Using Tables**.

```
ACTION: S [1] TABLEID: TXTP [2]  USERID: NFxx [3]
TEXT TYPE REFERENCE TABLE
KEY IS TEXT TYPE, CLAUSE NUMBER

       TEXT   CLAUSE
       TYPE   NUMBER            DESCRIPTION
       ----   ------   ------------------------------

01-    [4]     [5]                [6]
02-
03-
04-
05-
06-
07-
08-
09-
10-
11-
12-
```

Figure 8:94. Text Type Reference Table (TXTP)

Type Of Overpayment Reference Table (TYOP)

The TYOP is used to define valid overpayment types that can be used on the billing documents processed by FFS.

To access the TYOP, at the FFS screen, key in ***N*** at the Action field and ***TYOP*** in the TableID field, then press [Enter]. The TYOP screen (**Figure 8:95**) is displayed with an ***S*** in the Action field.

Instructions for adding are discussed below.

Note: If you are not authorized to perform a specific processing action (adding, changing, or deleting a record) in this table, contact your Functional Administrator responsible for Table Maintenance.

Adding A Record. At the TYOP screen, complete the fields as follows:

[1] **Action** *(required, alpha field; 1 position)*. Key in ***A***.

[2] **TableID** *(no-entry)*. Displays ***TYOP***.

[3] **UserID** *(no-entry)*. Displays the user ID.

[4] **Overpayment Type** *(required, alphanumeric field; 3 positions)*. Key in the value to describe the overpayment type that is used on a billing document.

[5] **Overpayment Type Long Name** *(optional, alpha field; max. of 30 positions)*. Key in the long name you wish to associate with the overpayment type.

[6] **Short Name** *(optional, alpha field; max. of 12 positions)*. Key in the short name you wish to associate with the overpayment type.

After keying in the data, press [Enter]. All records (lines) that are error-free or tagged with warning messages are added; records that contain either overrideable or fatal errors are not added. The message *All Lines Added* is displayed at the bottom of the screen to indicate that all or some records have been added; if any records contain errors, error messages are also displayed. For more information about error messages and correcting errors, see **Part 2, System Edits**.

- To add another record, repeat the above process.

Performing Other Actions. For instructions on displaying, changing, and deleting a record, or performing any other action, see **Part 2, Using Tables**.

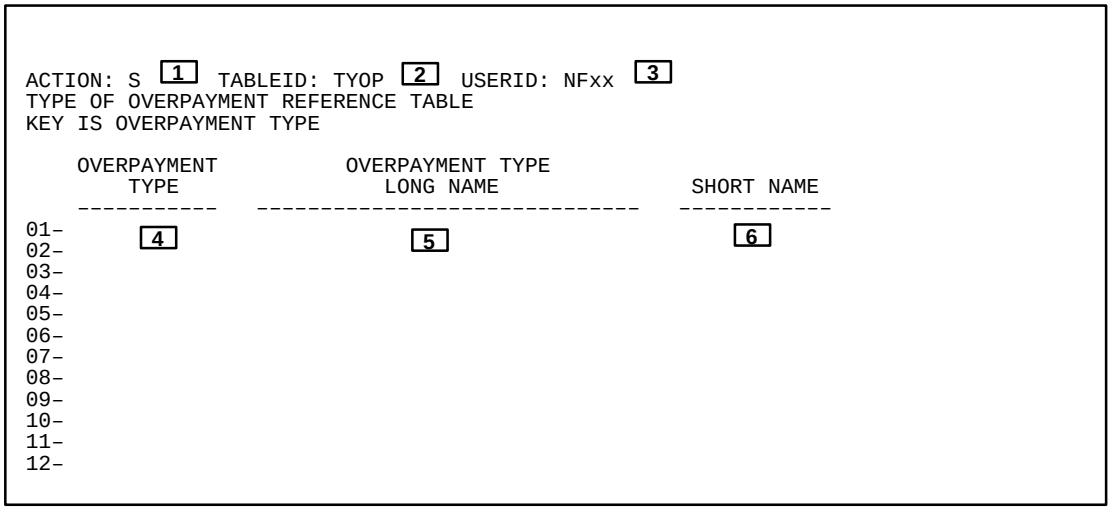

Figure 8:95. Type Of Overpayment Reference Table (TYOP)

Voucher Tracking Data Entry Table (VCTE)

The VCTE is used to enter specific vendor invoices and other payment documents to track by FFIS. The invoices and payment documents are defined by the payee code (vendor), invoice/document number, and document date.

To access the VCTE, at the FFS screen, key in ***N*** at the Action field and ***VCTE*** at the TableID field, then press [Enter]. The VCTE screen (**Figure 8:96**) is displayed with an ***S*** in the Action field.

Instructions for adding are discussed below.

Note: If you are not authorized to perform a specific processing action (adding, changing, or deleting a record) in this table, contact your Functional Administrator responsible for Table Maintenance.

Adding A Record. At the VCTE screen, complete the fields as follows:

[1] **Action** *(required, alpha field; 1 position)*. Key in ***A***.

[2] **TableID** (*no-entry*). Displays ***VCTE***.

[3] **UserID** (*no-entry*). Displays the user ID.

[4] **Payee** 🔑 *(required, alphanumeric field; 11 positions)*. Key in the payee code for this invoice. Typically the payee code is the vendor code or an employee's social security number. See the VEND for valid codes.

[5] **Doc Number** 🔑 *(required, alphanumeric field; 11 positions)*. Key in the vendor invoice or document number from the source document. The combination of payee code and document number is edited against previously entered documents to check for duplicate payments.

[6] **Doc Date** 🔑 *(required, numeric field; 6 positions)*. Key in the date from the source document. The combination of payee code, document number, and document date must be unique.

[7] **Travel Type** *(conditional, alphanumeric field; 3 positions)*. If a travel voucher is being entered, key in the travel type.

[8] **Responsibility Code** *(optional, alphanumeric field; 2 positions)*. Key in the code that identifies the person responsible for this document. See the RESP for valid codes.

[9] **Name** (*no-entry*). Displays the name of the person associated with the responsibility code from the RESP.

[10] **Div** (*no-entry*). Displays the division code derived which is associated with the responsibility code from the RESP.

[11] **Amount** *(required, numeric field; max. of 11 positions)*. Key in the amount of this document. If no decimal point is entered, two decimal places are assumed. Do not use commas or a dollar sign.

[12] **Payee Name** (*no-entry*). Displays the name of the payee associated with the payee code from the VEND.

[13] **Accept Date** *(optional, numeric field; 6 positions)*. Key in the delivery date of the goods or services described in this document.

```
ACTION: S [1]  TABLEID: VCTE [2]  USERID: NFxx [3]
VOUCHER TRACKING DATA ENTRY TABLE
KEY IS PAYEE, DOC NUMBER, DOC DATE, LN
PAYEE:  [4]          DOC NUMBER:  [5]        DOC DATE: [6]      TRAVEL TYPE: [7]
RESPONSIBILITY CODE [8]  NAME: [9]                          DIV: [10]
AMOUNT: [11]                  PAYEE NAME:  [12]
ACCEPT DATE: [13]             DESC: [14]
                                        EXCEPT DAYS:    [15] LAST LINE NUM:  [16]
----------  REFERENCE DOC  ----------
TC    NUMBER          TC    NUMBER
[17]    [18]

      TRACKING ACTV   ACTV      ENTERED     TO/          REAS
   LN    ORG   CODE   DATE        BY       FROM   ORG   CODE DUE DATE ACT DATE
   --- ------- ---- -------- ------------ ---- ------- ---- -------- --------
01-  [19]  [20]   [21]    [22]       [23]       [24]  [25]  [26]    [27]     [28]
02-
03-
04-
05-
```

Figure 8:96. Voucher Tracking Data Entry Table (VCTE)

14 **Desc** *(optional, alphanumeric field; 30 positions)*. Key in a description for the tracked document.

15 **Except Days** *(optional, numeric field; 4 positions)*. Key in the number of exception days for this document if subject to prompt pay. This field represents the number of days that are subtracted from the calculated number of days between receipt and payment in determining if this invoice must include a payment for interest. The field should be updated when the number of days between a Return to Vendor activity line is greater than the number of days specified in the PPAY.

16 **Last Line Num** (*no-entry*). Displays the line number of the last tracking line added for this document. This field is used by the document processors to determine the line number to use when adding processed tracking lines. This number is not decreased when an activity line is deleted. It always shows the line number of the last line created for a given document.

17 **TC (Reference Doc)** *(optional, alphanumeric field; 2 positions)*. Key in the transaction code of any reference document. Each reference document entered is validated against the appropriate table (based on the transaction code) to verify that the entered reference is valid.

18 **Number (Reference Doc)** *(optional, alphanumeric field; 11 positions)*. Key in the document number of any reference document. Each reference document entered is validated against the appropriate table (based on the transaction code) to verify that the entered reference is valid.

19 **Ln** 🔑 *(conditional, numeric field; 3 positions)*. If line information is being entered, key in a different number for each line from ***001*** to ***999***. The line number entered must not already exist for this document.

20 **Tracking Org** *(required, alphanumeric field; 7 positions)*. Key in the code for the organization tracking the document. This code is used to limit access to only authorized users. Multiple organizations may track the same document with each organization maintaining security over their individual tracking records.

21 **Actv Code** *(conditional, alphanumeric field; 4 positions)*. If line information is being entered, key in the activity code for this line. It must be a valid code in the DACT. At least one line must have an activity code of activity type **LOG** for a payment voucher to accept if the Voucher Tracking option in the TCAT for PV is ***R***.

22 **Actv Date** *(optional, numeric field; 6 positions)*. Key in the date associated with this activity line.

23 **Entered By** *(optional, alphanumeric field; 13 positions)*. Key in the name of the person entering this activity line.

24 **To/From** *(optional, alphanumeric field; 4 positions)*. Key in the code of the person or group to whom the document is being sent (if this is a "To line") or received from (if this is a "From line"). See the TOFM for valid codes.

25 **Org** *(optional, alphanumeric field; 6 positions)*. Key in the code of the organization to which the document is being sent (if this is a "To line") or received from (if this is a "From line").

26 **Reas Code** *(conditional, alphanumeric field; 4 positions)*. If the activity type derived from the DACT is **To** or **RTV**, key in the reason code appropriate for this activity line. See the RSCD for valid codes. Otherwise, this is an optional entry.

27 **Due Date** *(optional, numeric field; 6 positions)*. Key in the due date for this activity line.

28 **Act Date** *(optional, numeric field; 6 positions)*. Key in the actual date associated with this activity line. This date is used to determine discrepancies between due date and actual date for productivity reporting.

After keying in the data, press [Enter]. All records (lines) that are error-free or tagged with warning messages are added; records that contain either overrideable or fatal errors are not added. The message *All Lines Added* is displayed at the bottom of the screen to indicate that all or some records have been added; if any records contain errors, error messages are also displayed. For more information about error messages and correcting errors, see **Part 2, System Edits**.

- To add another record, repeat the above process.

Performing Other Actions. For instructions on displaying, changing, and deleting a record, or performing any other action, see **Part 2, Using Tables**.

Feeder To FFIS Vendor Cross Reference Table (VCXT)

The VCXT is used to cross reference a vendor identifier defined in a feeder system to an FFIS vendor code.

Note: Before a vendor can be crosswalked from a feeder system, the equivalent FFIS vendor must be added to the VEND.

To access the VCXT, at the FFS screen, key in ***N*** at the Action field and ***VCXT*** at the TableID field, then press [Enter]. The VCXT screen (**Figure 8:97**) is displayed with an ***S*** in the Action field.

Instructions for adding are discussed below.

Note: If you are not authorized to perform a specific processing action (adding, changing, or deleting a record) in this table, contact your Functional Administrator responsible for Table Maintenance.

Adding A Record. At the VCXT screen, complete the fields as follows:

[1] **Action** *(required, alpha field; 1 position)*. Key in ***A***.

[2] **TableID** (*no-entry*). Displays ***VCXT***.

[3] **UserID** (*no-entry*). Displays the user ID.

[4] **Feeder** 🔑 *(required, alphanumeric field; max. of 4 positions)*. Key in the feeder code.

[5] **Feeder Vendor ID** 🔑 (*required, alphanumeric field; max. of 20 positions*). Key in the vendor identification as coded in the feeder system.

[6] **FFIS Vendor** (*required, alphanumeric field; 11 positions*). Key in the vendor code. See the VEND for valid vendor codes.

After keying in the data, press [Enter]. All records (lines) that are error-free or tagged with warning messages are added; records that contain either overrideable or fatal errors are not added. The message *All Lines Added* is displayed at the bottom of the screen to indicate that all or some records have been added; if any records contain errors, error messages are also displayed. For more information about error messages and correcting errors, see **Part 2, System Edits**.

- To add another record, repeat the above process.

Performing Other Actions. For instructions on displaying, changing, and deleting a record, or performing any other action, see **Part 2, Using Tables**.

```
ACTION: S [1]  TABLEID: VCXT [2]  USERID: NFxx [3]
FEEDER TO FFIS VENDOR CROSS REFERENCE
KEY IS FEEDER, FEEDER VENDOR ID

    FEEDER  FEEDR VENDOR ID                        FFIS VENDOR
   -------- ---------------                        -----------
01-  [4]         [5]                                  [6]
02-
03-
04-
05-
06-
07-
08-
09-
10-
11-
12-
13-
14-
15-
```

Figure 8:97. Feeder To FFIS Vendor Cross Reference Table (VCXT)

Vendor Reference Table (VEND)

The VEND is used to define codes for vendors, organizations, and persons to whom the government makes payments or from whom the Government collects receivables.

To access the VEND, at the FFS screen, key in ***N*** at the Action field and ***VEND*** at the TableID field, then press [Enter]. The VEND screen (**Figure 8:98**) is displayed with an ***S*** in the Action field.

Instructions for adding are discussed below.

Note: If you are not authorized to perform the *Adding, Modifying, or Deleting A Record* actions in this table, contact your Vendor Coordinator responsible for Table Maintenance.

Note: RD's Procurement personnel must include the FFIS Vendor Code in the second line of the vendor's street address on every new or amended non–Type 60 Purchase Order (AD–838). To add a vendor for non–type 60 purchase order, provide the Taxpayer Identification number, name, mailing address, type of vendor, and prompt pay status to RD's Procurement Management Division. New or amended non–Type 60 Purchase Orders without an FFIS Vendor Code on the second address line will reject to suspense. For those vendors on Vendor Express, the vendor express number will no longer be on the second address line on the non–Type 60 Purchase Order.

Adding A Record. At the VEND screen, complete the fields as follows:

[1] **Action** *(required, alpha field; 1 position)*. Key in ***A***.

[2] **TableID** (*no-entry*). Displays ***VEND***.

[3] **UserID** (*no-entry*). Displays the user ID.

[4] **Vendor Code** *(required, alphanumeric field; max. of 11 positions)*. Key in a code using one of the following configurations to define the vendor. **Note:** The system provides a space between the 10th and 11th positions of the vendor code.

- **Corporate Commercial Vendors**. For commercial vendors who possess a Tax Identification Number (TIN), key in the TIN without dashes (–) in **positions 1–9**. For the initial VEND entry, **position 10** is blank and **position 11** is ***A***. If a single vendor requires multiple addresses, **position 11** is used. An additional 33 addresses may be added by entering in **position 11** one of the alternate address codes B–Z (less O and I) and 0–9. If more than 34 addresses are needed, additional VEND entries may be created by using in **position 10** one of the above address codes in combination with **position 11**. See Vendor Code Summary Chart (**Figure 8:99**) for examples.

- **Individual Commercial Vendors.** For commercial vendors who possess a Social Security Number (SSN), key in the SSN without dashes (–) in **positions 1–9**. Key in ***C*** in **position 10**. For the initial VEND entry, **position 11** is ***A***. If a single vendor requires multiple addresses, **position 11** is used. An additional 33 addresses may be added by entering in **position 11** one of the alternate address codes B–Z (less O and I) and 0–9. See Vendor Code Summary Chart (**Figure 8:99**) for examples.

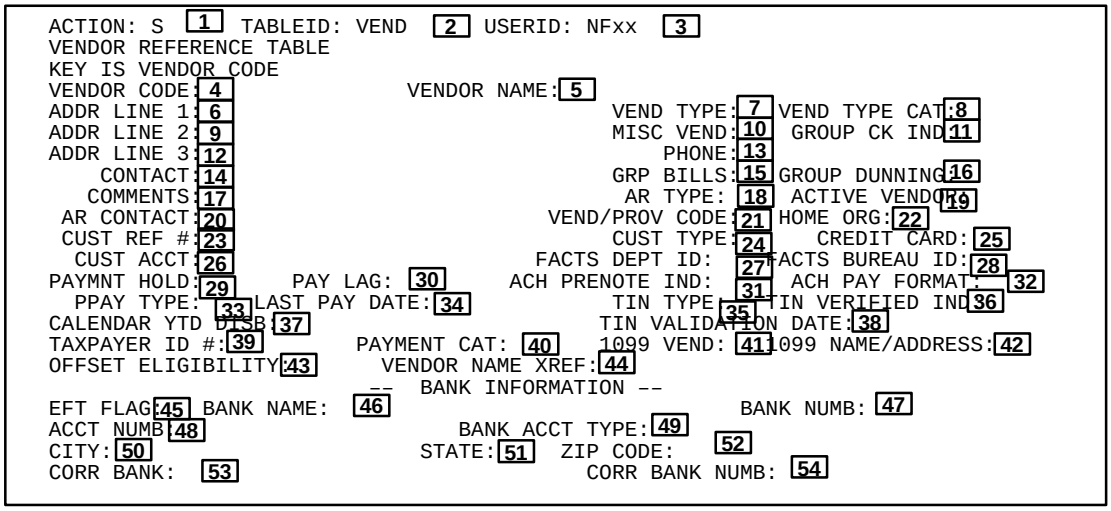

Figure 8:98. Vendor Reference Table (VEND)

• **Foreign Vendors**. For foreign vendors, key in the alphanumeric country code (as defined in the Table Management System, Table #95 or STCT in FFIS) in **positions 1–2** to represent the country in which the vendor is located. Key in the first 8 characters (unused positions are left blank) of the company's name in **positions 3–10**. For the initial VEND entry, **position 11** is ***A***. If a single Vendor requires multiple addresses, **position 11** is used. An additional 23 addresses may be added by entering in **position 11** one of the alternate address codes B–Z (less O and I). See Vendor Code Summary Chart (**Figure 8:99**) for examples.

• **Local And State Government Vendors**. For local and state vendors who possess an Employer Identification Number (EIN), key in the EIN without dashes (–) in **positions 1–9**. For the initial VEND entry, **position 10** is blank and **position 11** is ***A***. If a single vendor requires multiple addresses, **position 11** is used. An additional 33 addresses may be added by entering in **position 11** one of the alternate address codes B–Z (less O and I) and 0–9. If more than 34 addresses are needed, additional VEND entries may be created by using in **position 10** one of the above address codes in combination with **position 11**. See Vendor Code Summary Chart (**Figure 8:99**) for examples.

• **Federal Government Vendors And Agencies** (Billed Or Not Billed Via OPAC). For Federal vendors who possess an Agency Location Code (ALC), key in the ALC without dashes (–) in **positions 1–8**. Key in ***F*** in **position 9**. Key in an alpha ***O*** in **position 10** to bill an agency via OPAC. Leave **position 10** blank to not bill an agency via OPAC. For the initial VEND entry, **position 11** is ***A***. If a single Vendor/Agency requires multiple addresses, **position 11** is used. An additional 33 addresses may be added by entering in **position 11** one of the alternate address codes B–Z (less O and I) and 0–9. See Vendor Code Summary Chart (**Figure 8:99**) for examples.

• **Employees** (Full Or Part-time). For employees, key in the SSN without dashes (–) in **positions 1–9**. Key in ***E*** in **position 10.** For the initial VEND entry, **position 11** contains one of the standard address codes as follows.

- ***A*** = Assistant Disbursing Officer (ADO)
- ***C*** = Imprest Fund Cashier
- ***I*** = Employees reported on a 1099 form
- ***O*** = Employee's "special" address
- ***R*** = Employee's residence address
- ***S*** = Employee's salary address (check and/or EFT)
- ***T*** = Employee's T&A contact point

If more addresses are needed, additional VEND entries may be added by entering in **position 11** one of the 29 alternate address codes A–Z (less A, C, I, O, R, S, and T) and 0–9. See Vendor Code Summary Chart (**Figure 8:99**) for examples.

Note: The employee vendor codes are preestablished and any adding, changing (updating), or deleting is maintained by NFC based upon officially recorded changes to personnel records.

• **Supplemental/Non Employees** (Consultants, Volunteers, etc.). For agency specific use of other non employees records only. The vendor code is set up with a Vend Type of **Q**. Key in the SSN without dashes (–) in **positions 1–9**. Key in ***E*** in **position 10.** The first alternate address code in **position 11** should contain one of the codes as follows.

- ***I*** = Used to identify a payment to non-employees that should be reported on a 1099 form.
- ***O*** = Used for non-employee's special address.
- ***R*** = Used to represent a non-employee's residence address.
- ***S*** = Used to represent a non-employee's payment address (check and/or EFT).

See Vendor Code Summary Chart (**Figure 8:99**) for examples.

Type of Vendor	Number of Addresses per Vendor			Examples
	1	2–34	>35	
Corporate Commercial	Positions 1-9:TIN Position 10: blank Position 11: A	Positions 1-9: TIN Position 10: blank Position 11: B-Z (less O and I) plus 0 - 9	Positions 1-9: TIN Position 10: A-Z (less O and I) plus 0 - 9 Position 11: A-Z (less O and I) plus 0 - 9	123456789 A 123456789 B 123456789 AA
Individual Commercial	Positions 1-9: SSN Position 10: C Position 11: A	Positions 1-9: SSN Position 10: C Position 11: B-Z (less O or I) plus 0 - 9	N/A	123456789CA 123456789CB

Foreign	Positions 1-2: Country Code Positions 3-10: First 8 characters of the company's name Position 11: A	Positions 1-2: Country Code Positions 3-10: First 8 characters of the company's name Position 11: B-Z (less O and I)	N/A	FR12345678 A FR12345678B
Local and State Government	Positions 1-9: EIN Position 10: blank Position 11: A	Positions 1-9: EIN Position 10: blank Position 11: B-Z (less O and I) plus 0 - 9	Positions 1-9: EIN Position 10: A - Z (less O and I) plus 0 - 9 Position 11: A-Z (less O and I) plus 0 - 9	123456789 A 123456789 B 123456789 AA
Federal Government and Agencies billed via OPAC	Positions 1-8: ALC Position 9: F Position 10: O Position 11: A	Positions 1-8: ALC Position 9: F Position 10: O Position 11: B-Z (less O and I) plus 0 - 9	N/A	12345678FOA 12345678FOB
Federal Gov't. & Agencies not billed via OPAC	Positions 1-8: ALC Position 9: F Position 10: blank Position 11: A	Positions 1-8: ALC Position 9: F Position 10: blank Position 11: B-Z (less O and I) plus 0 - 9	N/A	12345678FO A 12345678FO B
Employees (Full or Part Time)	Positions 1-9: SSN Position 10: E Position 11: A	Positions 1-9: SSN Position 10: E Position 11: A, C, I, O, R, S, or T	N/A	123456789EA 123456789ET
Supplemental/ Non Employees (Consultants, Volunteers, etc.)	Positions 1-9: SSN Position 10: E Position 11: I, O, R, or S	N/A	N/A	123456789 EI 123456789 E O 123456789 E R 123456789E S

Figure 8:99. Vendor Code Summary Chart

5 **Vendor Name** (*required, alphanumeric field; max. of 30 positions)*. Key in the name of the vendor in the first 26 positions as it is to appear on checks and documents. Vendor names should not have any "lower case" characters or punctuation marks. You may define a category for miscellaneous vendors instead of an actual vendor. **Note:** The last four positions are reserved for security requirements.

If the Vendor Table Updates Vndr Name Tbl in the SOPT is **Y**, and the Vendor Name XRef is blank, this name is used to update the VNAM.

6 **Addr Line 1** (*required, alphanumeric field; max. of 30 positions)*. Key in the first address line exactly as you want it to appear on checks and documents. For foreign vendors, key in the street address or post office box number. Vendor address should not have any "lower case" characters or punctuation marks. If this line is defining a miscellaneous vendor category, do not enter an address.

7 **Vend Type** *(required, alpha field; 1 position)*. Key in a vendor type. See the VTYP for valid vendor type codes.

8 **Vend Type Cat** (*no-entry*). Displays a vendor type category code. Vendor types are defined as belonging to a unique vendor type category in the VTYP. The valid vendor type categories are:

E = Employee
G = Government
N = Non-government
S = State government

9 **Addr Line 2** (*required, alphanumeric field; max. of 30 positions)*. Key in the second address line exactly as you want it to appear on checks and documents. For foreign vendors, key in the city or providence. Vendor address should not have any "lower case" characters or punctuation marks. If this line is defining a miscellaneous vendor category, do not enter an address.

[10] **Misc Vend** (*optional default, alpha field; 1 position)*. Key in ***Y*** if this vendor code is defined as a miscellaneous vendor code used with "one-time" vendors. If left blank, the system defaults to ***N*** .**Note:** Miscellaneous Vendor codes are not added or utilized unless approved by NFC. Contact your Application Administrator responsible for Table Maintenance.

Allowing miscellaneous vendors implies that when the Vendor Control Option in the SOPT is **Y**, and you wish to enter a one-time vendor on an expenditure document, you must enter the miscellaneous vendor code along with the actual vendor's name and address.

[11] **Group Ck Ind** *(optional default, alpha field; 1 position)*. Key in ***Y*** if multiple payments to this vendor on the same day are to be grouped into one check. The standard is to set the indicator to ***Y*** for TELE, TRAN, & UTVN Feeder Vendors. This indicator normally applies to accounts payable vendors. If left blank, the system defaults to ***N***.

[12] **Addr Line 3** (*required, alphanumeric field: max. of 30 positions)*. Key in the third address line exactly as you want it to appear on checks and documents. The third address line is separated into three sections: (1) the City in the first 19 positions (for foreign vendors, the country name); (2) the State Code in positions 20-21 (for foreign vendors, the country code); and (3) the Zip Code in positions 22-30 (for foreign vendors, the 3 position numeric country code). Vendor address should not have any "lower case" characters or punctuation marks.

[13] **Phone** *(optional, numeric field; 11 positions)*. Key in the vendor's phone number.

[14] **Contact** *(optional, alphanumeric field; max. of 30 positions)*. Key in the name of the vendor's representative to be contacted, if necessary.

[15] **Grp Bills** *(optional default, alpha field; 1 position)*. Key in ***Y*** if multiple bills to this vendor on the same day are grouped on one bill. The standard is to set this indicator to ***N*** to prevent multiple bills to this vendor on the same day to be grouped on one bill. This indicator normally applies to accounts receivable vendors. If left blank, the system defaults to ***N***.

[16] **Group Dunning** *(optional default, alpha field; 1 position)*. Key in ***Y*** if multiple dunning notices to the same vendor on the same day are grouped on one notice. The standard is to set this indicator to ***N*** to prevent multiple dunning notices to this vendor on the same day to be grouped on one notice. This indicator normally applies to accounts receivable vendors. If left blank, the system defaults to ***N***.

[17] **Comments** *(optional, alphanumeric field; max. of 30 positions)*. Key in comments about this vendor. This field may be used to classify vendors for reporting purposes.

[18] **AR Type** (*required, alphanumeric field; max. of 4 positions*). Key in the accounts receivable type.

[19] **Active Vendor** *(conditional, alpha field; 1 position)*. If this vendor is active, key in ***A***. If this vendor is inactive, key in ***I***. The system does not allow any documents to be processed for an inactive vendor. If left blank, the system defaults to ***A***.

[20] **AR Contact** *(optional, alphanumeric field; max. of 20 positions)*. Key in the name of a contact person in the vendor's Accounts Receivable Department.

[21] **Vend/Prov Code** *(required, alpha field; 1 position)*. Key in one of the following:

- ***V*** = This record is a vendor only.
- ***P*** = This record is a provider only.
- ***B*** = This record can be used as either a vendor code or a provider code.

The standard is to set this indicator to **B**. This indicator allows vendor records to be used for processing accounts payable or accounts receivable transactions.

[22] **Home Org** *(optional, alphanumeric field; 5 positions)*. Key in a generic organization code used for travel related transactions. (Employee VEND records are populated by the NFC for security requirements. Non-Employee records required for travel related payments can be set up however, banking information for nonemployee EFT payments should be activated via COMT request through NFC.)

[23] **Cust Ref #** *(optional, alphanumeric field; 11 positions)*. Key in the customer reference number for this vendor code.

[24] **Cust Type** *(optional, alpha field; 3 positions)*. Key in the customer type for this vendor code. See the CTYP for valid values. Customer type normally applies to accounts receivable vendors.

[25] **Credit Card** *(conditional, alpha field; 1 position)*. If this employee has been issued a government credit card, key in ***Y***. If left blank, the system defaults to ***N***.

[26] **Cust Acct** *(conditional, alphanumeric field; 12 positions)*. If you have an account with this vendor, key in the account number. (NFC uses this field to store NFC Feeder ID numbers for future reference.)

[27] **FACTS Dept ID** *(conditional, numeric field; 2 positions)*. If the vendor type category is a ***G***, key in

the department ID. Otherwise, this field is optional. See VTYP for a list of the vendor type categories.

28 **FACTS Bureau ID** *(conditional, numeric field; 2 positions)*. If the vendor type category is a ***G***, key in the bureau ID. Otherwise, this field is optional. See VTYP for a list of the vendor type categories.

29 **Payment Hold** *(conditional, alpha field; 1 position)*. If all payments in the UPVT to this vendor should be suspended, key in ***Y***. If left blank, the system defaults to ***N***.

30 **Pay Lag** *(optional default, numeric field; 2 positions)*. Key in the number of days payments to this vendor should be lagged from the payment schedule base date. Use this field only if payments to this vendor should not use the standard system scheduling procedures. If only one position is used, the system automatically inserts a zero in the first position. If left blank, the system defaults to ***00***.

31 **ACH Prenote Ind** (*required, alpha field;1 position*). Key in one of the following to identify the status of a vendor's prenotification process.

- ***P*** = The vendor information awaits submission to the pre-notification process.
- ***N*** = The vendor does not require pre–notification
- ***S*** = The pre–notification informational entry has been transmitted
- ***Y*** = 30 days following transmission of the pre–notification informational entry Treasury has not communicated any inaccuracies

32 **ACH Pay Format** (*required, alpha field; 1 position*). Key in one of the following ACH payment format to be used for ACH payment.

- ***C*** = CCD+ACH payment format
- ***P*** = PPD+ACH payment format
- ***spaces*** = Non ACH payment

33 **PPAY Type** (*optional, alpha field; 1 position*). Key in the type of prompt payment associated with this vendor if this vendor is subject to prompt payment. See the PPAY for valid codes. The VTYP indicates whether a prompt pay type is required for every vendor type record.

34 **Last Pay Date** *(no-entry)*. Displays the last time a payment was made to this vendor through either the automated or manual disbursements process.

35 **TIN Type** (*required, alpha field; 1 position*). Key in one of the following codes to distinguish between the various types of TIN numbers.

- ***I*** = Individual Taxpayer Identification Number (ITIN)
- ***F*** = Federal ID Number
- ***S*** = Social Security Number (SSI)

36 **TIN Verified Ind** (*required, alpha field; 1 position*). Key in one of the following codes to track a TIN's verification status.

- ***N*** = Vendor's TIN does not require verification
- ***H*** = Vendor's TIN requires verification, but is not ready to be submitted
- ***S*** = Vendor's TIN requires verification and is ready to be submitted to Treasury
- ***P*** = Vendor's TIN has been submitted to Treasury, but verification is still required
- ***R*** = Treasury reported that the vendor's TIN is incorrect
- ***Y*** = Treasury reported that the vendor's TIN is correct

37 **Calendar YTD Disb** *(no-entry)*. Displays the payments made to Form 1099 vendors. It is cleared automatically at year end by the 1099 reporting program.

38 **TIN Validation Date** (*required, numeric field; 6 positions*). Key in the TIN validation date.

39 **Taxpayer ID** (*conditional, numeric field; 9 positions*). If the EFT flag is ***A*** (ACH), ***S*** (TFCS SF-1166), or ***B*** (Both), and if the vendor is an employee or an individual, key in the person's tax ID number for the vendor. FFIS uses this field for tax ID tracking and accumulating transactions. If the EFT flag is ***N*** and this field is left blank and the Vendor Type Category field is ***E***, this field defaults to the vendor code.

40 **Payment Cat** (*required, alpha field; 1 position*). Key in one of the following category to identify the type of payment.

- ***V*** = Vendor
- ***M*** = Miscellaneous

41 **1099 VEND** *(optional default, alpha field; 1 position)*. Key in ***Y*** if a Form 1099-Misc is produced for this vendor. When identified as a Form 1099-Misc vendor, a record cannot be deleted if the YTD disbursement amount is greater than zero. Reportable expenditures/disbursements for 1099 purposes are initiated based on two flag settings in FFIS: (1) the VEND–1099 flags are set to ***Y*** for all procurement/commercial Vendors, and (2) the BOCT - 1099 flags are set in accordance with the IRS guidelines provided by the NFC. Both flags must be set to ***Y*** in order for a transaction to be reported on the 1099 Form. If left blank, the system defaults to ***N***.

[42] **1099 Name/Address** (*required, alpha field; 1 position*). Key in one of the following to retrieve the name and address information if the vendor requires a 1099.

- ***N*** = Not a 1099 vendor
- ***Y*** = Use the vendor name and address field
- ***X*** = Use the vendor name cross–reference and address field

[43] **Offset Eligibility** (*required, alpha field; 1 position*). Key in one of the following to identify whether a vendor is eligible or ineligible to have their payments used as offsets of qualifying outstanding debt.

- ***Y*** = Yes
- ***N*** = No

[44] **Vendor Name XRef** *(optional, alphanumeric field; max. of 26 positions)*. Key in a name if you wish to update the VNAM with a name other than the vendor name entered above. Vendor names should not have any "lower case" characters or punctuation marks. The VNAM is used for browsing vendor names alphabetically. ☞**Note:** If you alter the vendor's name in this field, it also changes the vendor's name on the VNAM.☜

[45] **EFT Flag** *(optional default, alpha field; 1 position)*. Key in one of the following codes used to indicate that this vendor is eligible to receive payments through EFT.

- ***A*** = Automated Clearing House (ACH)
- ***S*** = Treasury Financial Communications (TFCS) SF-1166
- ***B*** = Both
- ***N*** = Not an Electronic Funds Transfer (EFT) vendor

[46] **Bank Name** *(conditional, alphanumeric field; max. of 30 positions)*. If this is an EFT vendor, key in the bank name as it should appear on the TFCS SF-1166s.

[47] **Bank Numb** *(conditional, numeric field; 9 positions)*. If this is an EFT vendor, key in the ABA/RTN number of the vendor bank with the appropriate check digit.

[48] **Acct Numb** *(conditional, numeric field; 17 positions)*. If this is an EFT vendor, key in the bank account number to which EFT payments are credited.

[49] **Bank Acct Type** *(conditional, alphanumeric field; 1 position)*. If this is an EFT vendor, key in one of the following to indicate the type of account to which payments are credited:

- ***C*** = Checking Account
- ***S*** = Savings Account

[50] **City** *(conditional, alphanumeric field; max. of 20 positions)*. If this is an EFT vendor, key in the city for the bank identified in **Field 46**.

[51] **State** *(conditional, alphanumeric field; 2 positions)*. If this is an EFT vendor, key in the state code for the bank identified in **Field 46**.

[52] **Zip** *(conditional, alphanumeric field; 9 positions)*. If this is an EFT vendor, key in the zip code for the bank identified in **Field 46**.

[53] **Corr Bank** *(optional, alphanumeric field; max. of 30 positions)*. Key in a correspondent bank, if the vendor bank does not accept TFCS wire transfers. The correspondent bank is the intermediate recipient of the payment. *This field is used only for TFCS payments.*

[54] **Corr Bank Numb** *(conditional, numeric field; 9 positions)*. If a correspondent bank name (**Field 46**) is entered, key in the ABA/RTN of the correspondent bank with the appropriate check digit.

This indicator should be ***N*** for vendors with new or revised banking information until a "Pre-note" exercise is performed by NFC. The activation of EFT payment capability within FFIS is maintained by NFC. If left blank, the system defaults to ***N***.

After keying in the data, press [Enter]. All records (lines) that are error-free or tagged with warning messages are added; records that contain either overrideable or fatal errors are not added. The message *All Lines Added* is displayed at the bottom of the screen to indicate that all or some records have been added; if any records contain errors, error messages are also displayed. For more information about error messages and correcting errors, see **Part 2, System Edits**.

- To add another record, repeat the above process.

Performing Other Actions. For instructions on displaying a record or performing any other action, see **Part 2, Using Tables**.

Voided Checks Reference Table (VOID)

The VOID is used to list the check numbers of those checks that have been voided.

To access the VOID, at the FFS screen, key in ***N*** at the Action field and ***VOID*** at the TableID field, then press [Enter]. The VOID screen (**Figure 8:100**) is displayed with an ***S*** in the Action field.

Instructions for adding are discussed below.

Note: If you are not authorized to perform a specific processing action (adding, changing, or deleting a record) in this table, contact your Functional Administrator responsible for Table Maintenance.

Adding A Record. At the VOID screen, complete the fields as follows:

[1] **Action** *(required, alpha field; 1 position)*. Key in ***A***.

[2] **TableID** *(no-entry)*. Displays ***VOID***.

[3] **UserID** *(no-entry)*. Displays the user ID.

[4] **Check Number** *(required, alphanumeric field; 8 positions)*. Key in the check number of the voided check.

[5] **D.O.** *(required, alpha field; 4 positions)*. Key in the code of the disbursing office that issued the check.

[6] **Check Date** *(required, numeric field; 6 positions)*. Key in the date the check was issued.

After keying in the data, press [Enter]. All records (lines) that are error-free or tagged with warning messages are added; records that contain either overrideable or fatal errors are not added. The message *All Lines Added* is displayed at the bottom of the screen to indicate that all or some records have been added; if any records contain errors, error messages are also displayed. For more information about error messages and correcting errors, see **Part 2, System Edits**.

- To add another record, repeat the above process.

Performing Other Actions. For instructions on displaying, changing, and deleting a record, or performing any other action, see **Part 2, Using Tables**.

```
ACTION: S [1]  TABLEID: VOID[2]  USERID: NFxx [3]
    VOIDED CHECKS REFERENCE TABLE

    KEY IS CHECK NUMBER, D.O.

H-   CHECK            CHECK
      NUMBER   D.O.     DATE
    --------   ----   --------
01-   [4]      [5]      [6]
02-
03-
04-
05-
06-
07-
08-
09-
10-
11-
12-
13-
```

Figure 8:100. Voided Checks Reference Table (VOID)

Vendor Reporting Reference Table (VRPT)

The VRPT is used to:

- Set reporting fields for vendors, organizations, and persons to whom the Government makes payments and collects receivables.
- Display an alternate view of the VEND.

To access the VRPT, at the FFS screen, key in ***N*** at the Action field and ***VRPT*** at the TableID field, then press [Enter]. The VRPT screen (**Figure 8:101**) is displayed with an ***S*** in the Action field.

Instructions for adding are discussed below.

Note: If you are not authorized to perform a specific processing action (adding, changing, or deleting a record) in this table, contact your Functional Administrator responsible for Table Maintenance.

Adding A Record. At the VRPT screen, complete the fields as follows:

[1] **Action** *(required, alpha field; 1 position)*. Key in ***A***.

[2] **TableID** (*no-entry*). Displays ***VRPT***.

[3] **UserID** (*no-entry*). Displays the user ID.

[4] **Vendor Code** 🔑 *(required, alphanumeric field; max. of 11 positions)*. Key in the code of the vendor whose classifications are to be set. The code is define in the VEND.

[5] **Vendor Name** (*no-entry*). Displays the vendor name.

[6] **Addr Line 1** (*no-entry*). Displays the first address line.

[7] **Addr Line 2** (*no-entry*). Displays the second address line.

[8] **Addr Line 3** (*no-entry*). Displays the third address line.

[9] **GSA Source** *(optional default, alpha field; 1 position)*. Key in ***Y*** if the GSA Source is appropriate to describe the classification of this vendor. This field is used for reporting only. If left blank, the system defaults to ***N***.

[10] **Fed Agency** *(optional default, alpha field; 1 position)*. Key in ***Y*** if the Federal agency is appropriate to describe the classification of this vendor. This field is used for reporting only. If left blank, the system defaults to ***N***.

[11] **Mfg** *(optional default, alpha field; 1 position)*. Key in ***Y*** if the manufacturer is appropriate to describe the classification of this vendor. This field is used for reporting only. If left blank, the system defaults to ***N***.

[12] **Dealer** *(optional default, alpha field; 1 position)*. Key in ***Y*** if the dealer is appropriate to describe the classification of this vendor. This field is used for reporting only. If left blank, the system defaults to ***N***.

[13] **Jobber** *(optional default, alpha field; 1 position)*. Key in ***Y*** if a jobber is appropriate to describe the classification of this vendor. A jobber buys merchandize from a manufacturer and sells to a retailer. This field is used for reporting only. If left blank, the system defaults to ***N***.

```
ACTION: S [1]  TABLEID: VRPT [2]  USERID: NFxx [3]
VENDOR REPORTING REFERENCE TABLE
KEY IS VENDOR CODE
01-
    VENDOR CODE: [4]              VENDOR NAME: [5]
    ADDR LINE 1: [6]
    ADDR LINE 2: [7]
    ADDR LINE 3: [8]
         GSA SOURCE: [9]  FED AGENCY:   [10]
                MFG: [11]      DEALER:   [12]          JOBBER: [13]     RETAILER:  [14]
        FACTORY REP: [15] INDEPENDENT:   [16] SMALL MINORITY: [17]  WOMAN OWNED:  [18]
         SMALL BUSS: [19]INCORPORATED:   [20]    PARTNERSHIP: [21]MINORITY BUSS:  [22]
02-
    VENDOR CODE:                  VENDOR NAME:
    ADDR LINE 1:
    ADDR LINE 2:
    ADDR LINE 3:
         GSA SOURCE:     FED AGENCY:
                MFG:          DEALER:              JOBBER:        RETAILER:
        FACTORY REP:    INDEPENDENT:       SMALL MINORITY:     WOMAN OWNED:
         SMALL BUSS:   INCORPORATED:          PARTNERSHIP:   MINORITY BUSS:
```

Figure 8:101. Vendor Reporting Reference Table (VRPT)

14 **Retailer** *(optional default, alpha field; 1 position)*. Key in ***Y*** if retailer is appropriate to describe the classification of this vendor. This field is used for reporting only. If left blank, the system defaults to ***N***.

15 **Factory Rep** *(optional default, alpha field; 1 position)*. Key in ***Y*** if factory representative is appropriate to describe the classification of this vendor. This field is used for reporting only. If left blank, the system defaults to ***N***.

16 **Independent** *(optional default, alpha field 1 position)*. Key in ***Y*** if independent business is appropriate to describe the classification of this vendor. This field is used for reporting only. If left blank, the system defaults to ***N***.

17 **Small Minority** *(optional default, alpha field; 1 position)*. Key in ***Y*** if small minority business is appropriate to describe the classification of this vendor. This field is used for reporting only. If left blank, the system defaults to ***N***.

18 **Woman Owned** *(optional default, alpha field; 1 position)*. Key in ***Y*** if woman owned business is appropriate to describe the classification of this vendor. This field is used for reporting only. If left blank, the system defaults to ***N***.

19 **Small Buss** *(optional default, alpha field; 1 position)*. Key in ***Y*** if small business is appropriate to describe the classification of this vendor. This field is used for reporting only. If left blank, the system defaults to ***N***.

20 **Incorporated** *(optional default, alpha field; 1 position)*. Key in ***Y*** if incorporated business is appropriate to describe the classification of this vendor. This field is used for reporting only. If left blank, the system defaults to ***N***.

21 **Partnership** *(optional default, alpha field; 1 position)*. Key in ***Y*** if partnership business is appropriate to describe the classification of this vendor. This field is used for reporting only. If left blank, the system defaults to ***N***.

22 **Minority Buss** ***(****optional default, alpha field; 1 position)*. Key in ***Y*** if minority business is appropriate to describe the classification of this vendor. This field is used for reporting only. If left blank, the system defaults to ***N***.

After keying in the data, press [Enter]. All records (lines) that are error-free or tagged with warning messages are added; records that contain either overrideable or fatal errors are not added. The message *All Lines Added* is displayed at the bottom of the screen to indicate that all or some records have been added; if any records contain errors, error messages are also displayed. For more information about error messages and correcting errors, see **Part 2, System Edits**.

- To add another record, repeat the above process.

Performing Other Actions. For instructions on displaying, changing, and deleting a record, or performing any other action, see **Part 2, Using Tables**.

Voucher Text Data Entry Table (VTXT)

The VTXT is used to associate lines of text with a specific voucher.

To access the VTXT, at the FFS screen, key in ***N*** at the Action field and ***VTXT*** at the TableID field, then press [Enter]. The VTXT screen (**Figure 8:102**) is displayed with an ***S*** in the Action field.

Instructions for adding are discussed below.

Note: If you are not authorized to perform a specific processing action (adding, changing, or deleting a record) in this table, contact your Functional Administrator responsible for Table Maintenance.

Adding A Record. At the VTXT screen, complete the fields as follows:

[1] **Action** *(required, alpha field; 1 position)*. Key in ***A***.

[2] **TableID** *(no-entry)*. Displays ***VTXT***.

[3] **UserID** *(no-entry)*. Displays the user ID.

[4] **Vendor Code** *(required, alphanumeric field; 11 positions)*. Key in the code for the vendor to be paid.

[5] **Trans Code** *(required, alphanumeric field; 2 positions)*. Key in the transaction code of the voucher for which you wish to add lines of text.

[6] **Voucher Number** *(required, alphanumeric fields; 11 positions)*. Key in the document number of the voucher for which you wish to add lines of text.

[7] **Travel Advance Number** *(required, alphanumeric fields; 6 positions)*. Key in the travel advance number of the voucher for which you wish to add lines of text.

[8] **Text** *(conditional, alphanumeric field; max. of 55 positions)*. If you want to associate text with this voucher, key in the text that you want to associate with this document. A blank text line is not permitted.

[9] **Text Line** *(optional default, alpha field; 4 positions)*. Key in the number of each text line. If left blank, the system defaults to text line numbers in increments of 10.

After keying in the data, press [Enter]. All records (lines) that are error-free or tagged with warning messages are added; records that contain either overrideable or fatal errors are not added. The message *All Lines Added* is displayed at the bottom of the screen to indicate that all or some records have been added; if any records contain errors, error messages are also displayed. For more information about error messages and correcting errors, see **Part 2, System Edits**.

- To add another record, repeat the above process.

Performing Other Actions. For instructions on displaying, changing, and deleting a record, or performing any other action, see **Part 2, Using Tables**.

```
ACTION: S [1]  TABLEID: VTXT [2]   USERID: NFxx [3]
VOUCHER TEXT DATA ENTRY TABLE
KEY IS VENDOR CODE, TRANS CODE, VOUCHER NUMBER, TRAVEL ADVANCE NUMBER,
       TEXT LINE
VENDOR CODE: [4]          TRANS CODE: [5] VOUCHER NUMBER: [6]
TRAVEL ADVANCE NUMBER: [7]
                                                          TEXT
                              TEXT                         LINE
    ------------------------------------------------------ ----
01-
02-                            [8]                          [9]
03-
04-
05-
06-
07-
08-
09-
10-
11-
12-
13-
```

Figure 8:102. Voucher Text Data Entry Table (VTXT)

Vendor Type Reference Table (VTYP)

The VTYP is used to establish categories of vendor types (i.e., employee, Government, non-Government, and state Government).

To access the VTYP, at the FFS screen, key in ***N*** at the Action field and ***VTYP*** at the TableID field, then press [Enter]. The VTYP screen (**Figure 8:103**) is displayed with an ***S*** in the Action field.

Instructions for adding are discussed below.

Note: If you are not authorized to perform a specific processing action (adding, changing, or deleting a record) in this table, contact your Functional Administrator responsible for Table Maintenance.

Adding A Record. At the VTYP screen, complete the fields as follows:

[1] **Action** *(required, alpha field; 1 position)*. Key in ***A***.

[2] **TableID** (*no-entry*). Displays ***VTYP***.

[3] **UserID** (*no-entry*). Displays the user ID.

[4] **Vendor Type** 🔑 *(required, alphanumeric field; 1 position)*. Key in the code used to correspond to the vendor type being defined.

[5] **Vendor Type Cat** *(required, alpha field; 1 position)*. Key in one of the following:

- ***E*** = Employee
- ***G*** = Government
- ***N*** = Non-Government
- ***S*** = State Government

[6] **Cat/Type Post** *(optional default, alpha field; 1 position)*. Key in one of the following:

- ***C*** = Indicates that vendor category posting is used to post the general ledger.
- ***T*** = Indicates that vendor type posting is used.
- ***N*** = Indicates that vendor posting to the general ledger is not to be used.

If left blank, the system defaults to ***N***.

[7] **Prompt Pay Ind** *(optional default, alpha field; 1 position)*. Key in ***Y*** if this vendor type falls under the requirements of the prompt payment guidelines. If left blank, the system defaults to ***N***.

[8] **Overdue Charges - I** *(optional default, alpha field; 1 position)*. Key in ***Y*** if this vendor type is subject to interest charges on overdue bills. If left blank, the system defaults to ***N***.

[9] **Overdue Charges - A** *(optional default, alpha field; 1 position)*. Key in ***Y*** if this vendor type is subject to administrative charges on overdue bills. If left blank, the system defaults to ***N***.

[10] **Overdue Charges - P** *(optional default, alpha field; 1 position)*. Key in ***Y*** if this vendor type is subject to penalty charges on overdue bills. If left blank, the system defaults to ***N***.

[11] **Report Vendor Cat** (*optional, alpha field; 1 position*). Key in one of the following:

- ***N*** = Non -Government
- ***Z*** = Non-Government with exception
- ***G*** = Government

[12] **Description** *(optional, alphanumeric field; max. of 30 positions)*. Key in a description for the vendor type.

```
ACTION: S [1]  TABLEID: VTYP[2]  USERID: NFxx [3]
VENDOR TYPE REFERENCE TABLE
KEY IS VENDOR TYPE

                VENDOR CAT/   PROMPT  OVERDUE  REPORT
                 TYPE  TYPE    PAY    CHARGES   VENDOR
    VENDOR TYPE   CAT  POST    IND    I  A  P   CAT       DESCRIPTION
    -----------  ----- -----  ------  -------  ------------------------------
01-
02-   [4]       [5]   [6]    [7]   [8][9][10]  [11]         [12]
03-
04-
05-
06-
07-
08-
09-
10-
11-
12-
13-
```

Figure 8:103. Vendor Type Reference Table (VTYP)

After keying in the data, press [Enter]. All records (lines) that are error-free or tagged with warning messages are added; records that contain either overrideable or fatal errors are not added. The message *All Lines Added* is displayed at the bottom of the screen to indicate that all or some records have been added; if any records contain errors, error messages are also displayed. For more information about error messages and correcting errors, see **Part 2, System Edits**.

- To add another record, repeat the applicable process above.

Performing Other Actions. For instructions on displaying, changing, and deleting a record, or performing any other action, see **Part 2, Using Tables**.

Write-Off Reason Code Reference Table (WORC)

The WORC is used to define write-off reason codes.

To access the WORC, at the FFS screen, key in ***N*** at the Action field and ***WORC*** at the TableID field, then press [Enter]. The WORC screen (**Figure 8:104**) is displayed with an ***S*** in the Action field.

Instructions for adding are discussed below.

Note: If you are not authorized to perform a specific processing action (adding, changing, or deleting a record) in this table, contact your Functional Administrator responsible for Table Maintenance.

Adding A Record. At the WORC screen, complete the fields as follows:

[1] **Action** *(required, alpha field; 1 position)*. Key in ***A***.

[2] **TableID** *(no-entry)*. Displays ***WORC***.

[3] **UserID** *(no-entry)*. Displays the user ID.

[4] **Write-Off Reason Code** *(required, alphanumeric field; 1 position)*. Key in a write-off reason code.

[5] **Write-Off Reason Code Long Name** *(optional, alpha field; max. of 30 positions)*. Key in the long name for the write-off reason code.

[6] **Write-Off Reason Code Short Name** *(optional, alpha field; max. of 12 positions)*. Key in the short name for the write-off reason code.

After keying in the data, press [Enter]. All records (lines) that are error-free or tagged with warning messages are added; records that contain either overrideable or fatal errors are not added. The message *All Lines Added* is displayed at the bottom of the screen to indicate that all or some records have been added; if any records contain errors, error messages are also displayed. For more information about error messages and correcting errors, see **Part 2, System Edits**.

- To add another record, repeat the above process.

Performing Other Actions. For instructions on displaying, changing, and deleting a record, or performing any other action, see **Part 2, Using Tables**.

```
ACTION: S [1]   TABLEID: WORC [2]   USERID: NFxx [3]
WRITE-OFF REASON CODE REFERENCE TABLE
KEY IS WRITE-OFF REASON CODE

      WRITE-OFF          WRITE-OFF REASON CODE      WRITE-OFF REASON CODE
     REASON CODE               LONG NAME                SHORT NAME
     -----------    ------------------------------  --------------------
          [4]                    [5]                        [6]
01-
02-
03-
04-
05-
06-
07-
08-
09-
10-
11-
12-
13-
```

Figure 8:104. Write-Off Reason Code Reference Table (WORC)

Write-Off Reference Table (WROT)

The WROT is used to select billing documents to be written-off.

To access the WROT, at the FFS screen, key in ***N*** at the Action field and ***WROT*** at the TableID field, then press [Enter]. The WROT screen (**Figure 8:105**) is displayed with an ***S*** in the Action field.

Instructions for adding are discussed below.

Note: If you are not authorized to perform a specific processing action (adding, changing, or deleting a record) in this table, contact your Functional Administrator responsible for Table Maintenance.

Adding A Record. At the WROT screen, complete the fields as follows:

[1] **Action** *(required, alpha field; 1 position)*. Key in ***A***.

[2] **TableID** *(no-entry)*. Displays ***WROT***.

[3] **UserID** *(no-entry)*. Displays the user ID.

[4] **Payer ID** *(required, alphanumeric field; 11 positions)*. Key in the vendor or provider for the receivable. This field may be manually entered or generated by the batch program that selects overdue receivables for write-offs.

[5] **BD ID** *(required, alphanumeric field; 13 positions)*. Key in the transaction code and document number of the receivable. This field may be manually entered or generated by the batch program that selects overdue receivables for write-offs.

[6] **Total Bill Amount** *(no-entry)*. Displays the total amount that is outstanding for this receivable. This amount includes the uncollected principal, interest, administrative charges, and penalties.

[7] **Last Dun Date** *(no-entry)*. Displays the date the last dunning notice was sent to the vendor or provider for this receivable.

[8] **Overdue Stat** *(no-entry)*. Displays the overdue status code for this receivable.

[9] **Write-Off Flg** *(optional, alpha field; 1 position)*. Key in ***P*** if the receivable has been previously selected. Key in ***Y*** if you wish to write-off the receivable. The system sets this flag to ***N*** for receivables that have been selected for the first time as candidates for write-off.

[10] **Write-Off Rsn** *(optional, alphanumeric field; 1 position)*. Key in the write-off reason code desired if different from the default code. If left blank, the system defaults to the value of the write-off reason code from the AROP.

[11] **Act Out** *(optional, alphanumeric field; 3 positions)*. Key in the action out code.

```
ACTION: S [1]  TABLEID: WROT[2]   USERID: NFxx[3]
WRITE-OFF REFERENCE TABLE
KEY IS PAYER ID, BD ID

                                                                OVER
                                     TOTAL BILL      LAST DUN DUE WRITE-OFF ACT
      PAYER ID        BD ID            AMOUNT          DATE   STAT FLG RSN  OUT
    ------------  -------------- ------------------- -------- ---- -------- ---
01-     [4]            [5]              [6]            [7]    [8]  [9][10]  [11]
02-
03-
04-
05-
06-
07-
08-
09-
10-
11-
12-
13-
```

Figure 8:105. Write-Off Reference Table (WROT)

After keying in the data, press [Enter]. All records (lines) that are error-free or tagged with warning messages are added; records that contain either overrideable or fatal errors are not added. The message *All Lines Added* is displayed at the bottom of the screen to indicate that all or some records have been added; if any records contain errors, error messages are also displayed. For more information about error messages and correcting errors, see **Part 2, System Edits**.

- To add another record, repeat the above process.

Performing Other Actions. For instructions on displaying, changing, and deleting a record, or performing any other action, see **Part 2, Using Tables**.

Withholding Tax Allowance Reference Table (WTAT)

The WTAT is used to record the amount of Withholding Tax Allowance (WTA) and Relocation Income Tax Allowance (RITA) by employee and calendar year.

To access the WTAT, at the FFS screen, key in ***N*** at the Action field and ***WTAT*** at the TableID field, then press [Enter]. The WTAT screen (**Figure 8:106**) is displayed with an ***S*** in the Action field.

Instructions for adding are discussed below.

Note: If you are not authorized to perform a specific processing action (adding, changing, or deleting a record) in this table, contact your Functional Administrator responsible for Table Maintenance.

Adding A Record. At the WTAT screen, complete the fields as follows:

1 **Action** (*required, alpha field; 1 position*). Key in ***A***.

2 **TableID** (*no-entry*). Displays ***WTAT***.

3 **UserID** (*no-entry*). Displays the user ID.

4 **Calendar Year** (*required, numeric field; 2 positions)*. Key in the last 2 digits of the calendar year in which tax withholding took place.

5 **Employee ID** (*required, alphanumeric field; 10 positions*). Key in the code identifying the employee for whom taxes were withheld.

6 **Withholding Tax Allowance (WTA) Amount** (*no-entry*). Displays the amount of withholding tax allowance granted to this employee in this calendar year.

7 **Relocation Income Tax Allowance (RITA) Amount** (*no-entry*). Displays the amount of relocation income tax allowance reported by the employee in this calendar year.

8 **RITA Processed Flag** (*no-entry*). Displays **Y** if relocation income tax allowance was entered.

After keying in the data, press [Enter]. All records (lines) that are error-free or tagged with warning messages are added; records that contain either overrideable or fatal errors are not added. The message *All Lines Added* is displayed at the bottom of the screen to indicate that all or some records have been added; if any records contain errors, error messages are also displayed. For more information about error messages and correcting errors, see **Part 2, System Edits**.

- To add another record, repeat the above process.

Performing Other Actions. For instructions on displaying, changing, and deleting a record, or performing any other action, see **Part 2, Using Tables**.

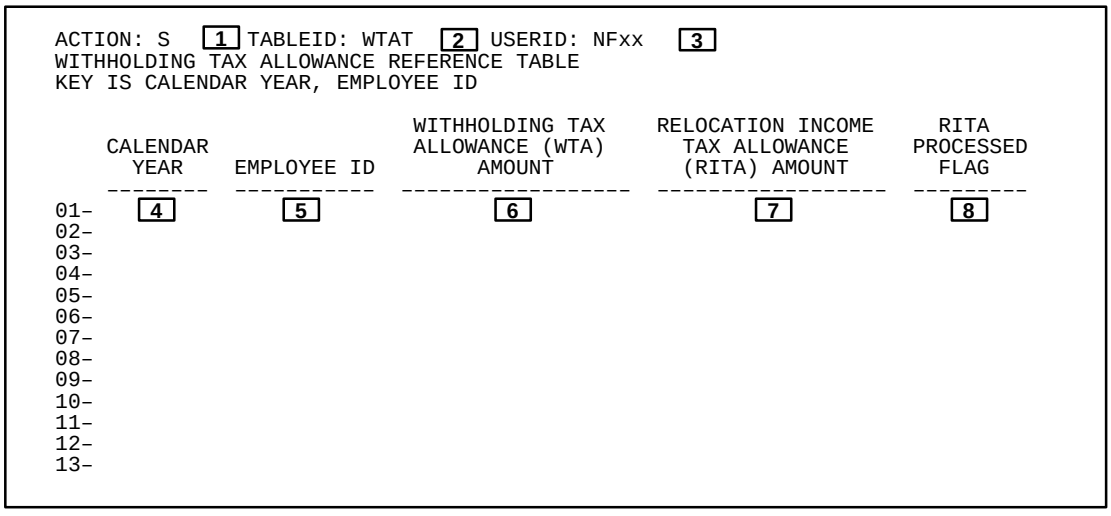

Figure 8:106. Withholding Tax Allowance Reference Table (WTAT)

Year End Account Reference Table (YACT)

The YACT is used to:

- Define the accounts into which a given general ledger account should be closed.
- Define which general ledger accounts should be reinstated.
- Define the general ledger accounts for which closing, beginning balance, and reinstatement transactions should be posted using a full accounting distribution.
- Define which general ledger accounts should be included when computing carryover/expired amounts, and identify whether the account should be added or subtracted for this calculation.

To access the YACT, at the FFS screen, key in ***N*** at the Action field and ***YACT*** at the TableID field, then press [Enter]. The YACT screen (**Figure 8:107**) is displayed with an ***S*** in the Action field.

Instructions for adding are discussed below.

Note: If you are not authorized to perform a specific processing action (adding, changing, or deleting a record) in this table, contact your Functional Administrator responsible for Table Maintenance.

Adding A Record. At the YACT screen, complete the fields as follows:

[1] **Action** *(required, alpha field; 1 position)*. Key in ***A***.

[2] **TableID** (*no-entry*). Displays ***YACT***.

[3] **UserID** (*no-entry*). Displays the user ID.

[4] **Fiscal Year** *(required, numeric field; 2 positions)*. Key in the last 2 digits of the fiscal year being closed.

[5] **GL Account** *(required, numeric field; 4 positions)*. Key in the general ledger account for which you are specifying the closing accounts or the various flags. It must be a valid account in the GLAC for the fiscal year being closed and for the next fiscal year of the reinstate expired flag or reinstate unexpired flag.

[6] **Close Accts Expired General** *(required, numeric field; 4 positions)*. Key in the account into which the key account should be closed for an appropriation that is expired and the fund type is Government. The account must be valid in the GLAC for the year being closed and for the next fiscal year. A warning is displayed if the account is not one of the four accounts in the YOPT.

[7] **(Close Accts Expired) Business** *(required, numeric field; 4 positions)*. Key in the account into which the key account should be closed for an appropriation that is expired and the fund type is business. The account must be valid in the GLAC for the year being closed and for the next fiscal year. A warning is displayed if the account is not one of the four accounts in the YOPT.

```
ACTION: S[1]  TABLEID: YACT[2]  USERID: NFxx[3]
YEAR END ACCOUNT REFERENCE TABLE
KEY IS FISCAL YEAR, GL ACCT
FISCAL YEAR: [4]
01-
   GL ACCT:  [5]     CLOSE ACCTS EXPIRED GENERAL:    [6]       BUSINESS:  [7]
                           UNEXPIRED GENERAL:    [8]       BUSINESS:  [9]
   FLAGS       REINSTATE EXPIRED:[10]   UNEXPIRED:....[11].....................
               EXPIRED/CARRYOVER:[12]  PLUS/MINUS:    [13]
                  BALANCE DETAIL[14]  ZERO BALANCE:    [15]

02-
   GL ACCT:          CLOSE ACCTS EXPIRED GENERAL:              BUSINESS:
                           UNEXPIRED GENERAL:              BUSINESS:
   FLAGS       REINSTATE EXPIRED:      UNEXPIRED:.............................
               EXPIRED/CARRYOVER:     PLUS/MINUS:
                  BALANCE DETAIL:   ZERO BALANCE:
```

Figure 8:107. Year End Account Reference Table (YACT)

8 **Unexpired General** *(required, numeric field; 4 positions)*. Key in the account into which the key account should be closed for an appropriation that is unexpired and the fund type is Government. The account must be valid in the GLAC for the year being closed and for the next fiscal year. A warning is displayed if the account is not one of the four accounts in the YOPT.

9 **(Unexpired) Business** *(required, numeric field; 4 positions)*. Key in the account into which the key account should be closed for an appropriation that is unexpired and the fund type is business. The account must be valid in the GLAC for the year being closed and for the next fiscal year. A warning is displayed if the account is not one of the four accounts in the YOPT.

Note: Fields 10 through 15 are used as flags.

10 **Reinstate Expired** *(required, alpha field;1 position)*. Key in ***Y*** if the account is reinstated at year-end for expired or closed appropriations. If ***Y*** is entered accounts are set up in the new year exactly the way they were before closing.

11 **Reinstate Unexpired** *(required, alpha field; 1 position)*. Key in ***Y*** if the account is reinstated at year-end for unexpired appropriations. If ***Y*** is entered accounts are set up in the new year exactly the way they were before closing.

12 **Expire/Carryover** (*required, alpha field; 1 position)*. Key in ***Y*** if the general ledger account activity updates the carryover/expired amount in the APPR and FAPP. Valid only for budgetary accounts. For single and multi–year funds this flag defines the general ledger accounts included in the expired amount, while for no-year funds it also defines the amount carried forward. For no-year funds whose carryover indicator is ***Y,*** all accounts that are selected here are used to compute the carryover amount posted with an AA and transaction type specified in the YOPT.

13 **Plus/Minus** *(required, numeric field; 1 position)*. Key in + (plus) if the account balance is added, or key in – (minus) if the account balance is subtracted. This flag indicates whether the balance in an account needs to add or subtract in the computation of authority that expired or is carried forward. The carryover calculation expects a credit balance.

14 **Balance Detail** *(required, alpha field; 1 position)*. Key in ***Y*** if closing, reinstatement, and beginning balance entries are recorded at the detail account level (the same level of detail as the year-to-date journal). Otherwise, key in ***N***. Valid only for real accounts.

15 **Zero Balance** *(required, alpha field 1 position)*. Key in ***Y*** if the account should have a zero balance at the year end. Otherwise, key in ***N***.

After keying in the data, press [Enter]. All records (lines) that are error-free or tagged with warning messages are added; records that contain either overrideable or fatal errors are not added. The message *All Lines Added* is displayed at the bottom of the screen to indicate that all or some records have been added; if any records contain errors, error messages are also displayed. For more information about error messages and correcting errors, see **Part 2, System Edits**.

- To add another record, repeat the above process.

Performing Other Actions. For instructions on displaying, changing, and deleting a record, or performing any other action, see **Part 2, Using Tables**.

Year End Control Options Reference Table (YOPT)

The YOPT is used to specify the default closing accounts and options.

To access the YOPT, at the FFS screen, key in ***N*** at the Action field and ***YOPT*** at the TableID field, then press [Enter]. The YOPT screen (**Figure 8:108**) is displayed with an ***S*** in the Action field.

Instructions for adding are discussed below.

Note: If you are not authorized to perform a specific processing action (adding, changing, or deleting a record) in this table, contact your Functional Administrator responsible for Table Maintenance.

Adding A Record. At the YOPT screen, complete the fields as follows:

[1] **Action** *(required, alpha field; 1 position)*. Key in ***A***.

[2] **TableID** (*no-entry*). Displays ***YOPT***.

[3] **UserID** (*no-entry*). Displays the user ID.

[4] **Fiscal Year** 🔑 *(required, numeric field; 2 positions)*. Key in the last 2 digits of the fiscal year for which the accounts and options are defined.

[5] **Withdrawal (Accounts)** (*required, numeric field; 4 positions*). Key in the account used in the year-end account table generation program. Accounts must be valid entries and real accounts in the current fiscal year and the next fiscal year in the GLAC.

[6] **Reinstate Appropriation Code** (*required, alpha field; 1 position*). Key in one of the following:

- ***N*** = To indicate that no reinstating takes place.
- ***U*** = To indicate that reinstating takes place for unexpired multi-year appropriations.
- ***A*** = To reinstate all appropriations.
- ***E*** = To reinstate the expired appropriations.
- ***C*** = To reinstate the closed appropriations.

[7] **Unexpended Appropriations (Accounts)** *(required, numeric field; 4 positions)*. Key in the account used in the year-end account table generation program. Accounts must be valid entries and real accounts in the current fiscal year and the next fiscal year in the GLAC.

[8] **Backout Carryover Trans Type** (*required, alphanumeric field; 2 positions*). Key in the back out carryover transaction type.

[9] **Invested Capital (Accounts)** *(required, numeric field; 4 positions)*. Key in the account used in the year-end account table generation program. Accounts must be valid entries and real accounts in the current fiscal year and the next fiscal year in the GLAC.

[10] **Carryover Trans Type** *(required, alphanumeric field; 2 positions)*. Key in the carryover transaction type.

[11] **Cumulative Results of Operations (Accounts)** *(required, numeric field; 4 positions)*. Key in the account used in the year-end account table generation program. Accounts must be valid entries and real accounts in the current fiscal year and the next fiscal year in the GLAC.

[12] **New Year Fiscal Month** *(required, alphanumeric field; 2 positions)*. Key in the period in which beginning balance and reinstatement entries is posted. Either ***00*** is valid or the entered month must exist in the APRD.

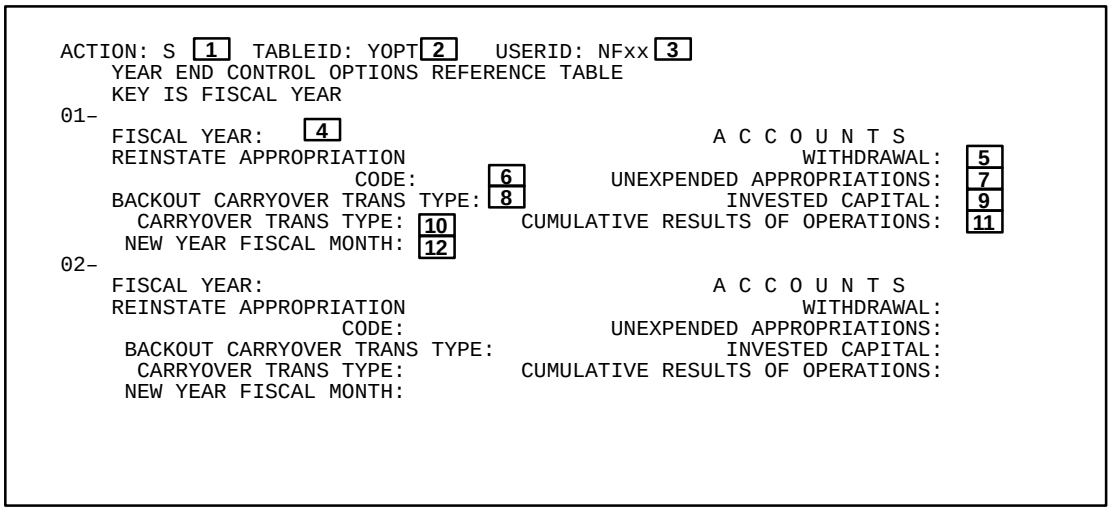

Figure 8:108. Year End Control Options Reference Table (YOPT)

After keying in the data, press [Enter]. All records (lines) that are error-free or tagged with warning messages are added; records that contain either overrideable or fatal errors are not added. The message *All Lines Added* is displayed at the bottom of the screen to indicate that all or some records have been added; if any records contain errors, error messages are also displayed. For more information about error messages and correcting errors, see **Part 2, System Edits**.

- To add another record, repeat the above process.

Performing Other Actions. For instructions on displaying, changing, and deleting a record, or performing any other action, see **Part 2, Using Tables**.

Inquiry Tables

Accountable Document Inquiry Table (ACTI)

The ACTI is used to view specific information about the status of the following documents that are being tracked by FFIS: Voucher And Schedule Of Payments (SF-1166), Voucher And Schedule Of Payments (Continuation Sheet) (SF-1167), and Government Transportation Request (GTR).

To access the ACTI, at the FFS screen, key in ***N*** at the Action field and ***ACTI*** at the TableID field, then press [Enter]. The ACTI screen (**Figure 8:109**) is displayed with an ***S*** in the Action field.

Displaying A Record. For instructions on displaying a record, see **Part 2, Using Tables**.

The fields on the ACTI are listed below with an explanation of each:

[1] **Action.** Displays ***S***.

[2] **TableID.** Displays ***ACTI***.

[3] **UserID.** Displays the user ID.

Note: Fields [4] through [27] are updated by:

- Direct entry to the ACTE.
- Check cancellation process.

[4] **Document Number** 🔑. Displays the number associated with this document. This number is used by the system to reference this document tracking record.

[5] **Initial Entry Date**. Displays the date of record for the document to be tracked.

[6] **Type.** Displays the type of document. See **Appendix B** and/or **C** for a list of valid documents.

[7] **Responsibility Code.** Displays the code that identifies the person responsible for this document. The codes are defined in the RESP.

[8] **Name.** Displays the name of the person associated with the responsibility code.

[9] **Div.** Displays the division code derived from the RESP based on the responsibility code.

[10] **Group (Y/N).** Displays ***Y*** to indicate this is a group of documents that should be tracked as one entity. Displays ***N*** to indicate this is a group of documents that should be tracked separately.

[11] **Number In Group.** Displays the number of documents in the group being tracked.

[12] **Expand Group (Y/N).** Displays **Y** to indicate that each document in the document group has a unique document tracking record. Displays **N** to indicate the document group does not have a unique document tracking record. Document tracking assumes that all documents in the group are numbered sequentially beginning with the number associated with the group itself.

```
ACTION: S [1]   TABLEID: ACTI[2]   USERID: NFCX[3]
                  *** ACCOUNTABLE DOCUMENT INQUIRY TABLE ***
KEY IS DOCUMENT NUMBER, LN
DOCUMENT NUMBER:[4]          INITIAL ENTRY DATE: [5]      TYPE:  [6]
RESPONSIBILITY CODE:[7] NAME:  [8]                         DIV: [9]
GROUP (Y/N):[10]NUMBER IN GROUP:[11]  EXPAND GROUP (Y/N):[12]EXPAND TYPE: [13]
DESC: [14]                            LAST ACT DATE:[15]      STATUS:  [16]
                                                    LAST LINE NUM:  [17]

      TRACKING ACTV   ACTV      ENTERED     TO/          REAS
   LN    ORG   CODE   DATE        BY       FROM   ORG   CODE DUE DATE ACT DATE
   --- ------- ---- -------- ------------ ---- ------- ---- -------- --------
01- [18]  [19]  [20]  [21]       [22]      [23]  [24]  [25]    [26]     [27]
02-
03-
04-
05-
06-
07-
08-
09-
```

Figure 8:109. Accountable Document Inquiry Table (ACTI)

13 **Expand Type.** Displays the numbering scheme for this group. This indicates to the document tracking program where to find the numeric fields on which to perform group expansion. The following codes are the values:

- ***G*** = Indicates that the group being tracked is a book of GTRs. The structure of the GTR number is assumed to be one alphanumeric character followed by up to ten numeric characters.
- ***6*** = Indicates that the group being tracked is a pack of SF-1166 documents. The structure of the SF-1166 pre-printed number is assumed to be two alphanumeric characters followed by up to nine numeric characters.
- ***7*** = Indicates that the group being tracked is a pack of SF-1167 documents. The structure of the SF-1167 pre-printed number is assumed to be nine alphanumeric characters followed by up to two numeric characters.

14 **Desc.** Displays a description of the tracked document.

15 **Last Act Date.** Displays the last date on which any action was taken on this document.

16 **Status.** Displays the status of the document, (e.g., ***Logged***, ***In Process***, ***Canceled***, or ***Processed)***.

17 **Last Line Num.** Displays the line number of the last tracking line added for this document.

18 **Ln** 🔑. Displays the number for each line from ***001*** to ***999***.

19 **Tracking Org.** Displays the code for the organization tracking the document. This code is used to limit access to only authorized users. Multiple organizations may track the same document with each organization maintaining security over their individual tracking records. If no organization code is available, the appropriate default tracking organization is derived from the SOPT.

20 **Actv Code.** Displays the activity code appropriate for this line.

21 **Actv Date.** Displays the date associated with the activity line.

22 **Entered By.** Displays the name of the individual entering this activity line. If this line was created by the system (i.e., activity code is ***PROC***), this field contains the transaction code and document number of the document creating this line.

23 **To/From.** Displays the code of the person or group to whom the document is being sent (if this is a "To line") or received from (if this is a "From line").

24 **Org.** Displays the code of the organization to which the document is being sent (if this is a "To line") or received from (if this is a "From line").

25 **Reas Code.** Displays the reason code appropriate for this activity line.

26 **Due Date.** Displays the due date for this activity line.

27 **Act Date.** Displays the actual date associated with the activity line. This date is used to determine discrepancies between due date and actual date for productivity reporting.

After viewing the data, you have several options, as described below:

- To view another record, repeat the above process.
- To view another table, key in ***N*** at the Action field and the applicable table ID in the Table ID field, then press [Enter].
- To access a document screen, key in ***L*** at the Action field and the applicable document transaction code at the Table ID field. Use the [Space Bar] to erase the remaining 2 characters, then press [Enter].
- To exit the system, follow the sign-off instruction under **Part 2, Accessing The System**.

Allotment Inquiry Table (ALLT)

The ALLT is used to view:

- Information about the allotment budget level and each allotment budget line.
- Each budget line's accounting distribution and budgeted amounts.
- Commitment, obligation, and expenditure amounts.
- Estimated and actual reimbursements for each allotment line.

To access the ALLT, at the FFS screen, key in ***N*** at the Action field and ***ALLT*** at the TableID field, then press [Enter]. The ALLT screen (**Figure 8:110**) is displayed with an ***S*** in the Action field.

Displaying A Record. For instructions on displaying a record, see **Part 2, Using Tables**.

The fields on the ALLT are listed below with an explanation of each:

[1] **Action.** Displays ***S***.

[2] **TableID.** Displays ***ALLT***.

[3] **UserID.** Displays the user ID.

[4] **BFYs** 🔑. Displays the budget fiscal years of the allotment. This field is updated by the BE and must be valid in the FSYR.

[5] **Fund** 🔑. Displays the fund code used in the allotment's budgetary accounting distribution. This field is updated by the BE.

[6] **Division** 🔑. Displays the division code used in the allotment's budgetary accounting distribution. This field is updated by the BE.

[7] **Org** 🔑. Displays the organization code used in the allotment's budgetary accounting distribution. This field is updated by the BE.

[8] **Pgm** 🔑. Displays the program code used in the allotment's budgetary accounting distribution. This field is updated by the BE.

[9] **BOC** 🔑. Displays the budget object code used in the allotment's budgetary accounting distribution. This field is updated by the BE.

[10] **Status Ind**. Displays one of the following:

A = Active allotment
I = Inactive allotment

If the allotment spending control option on the FUN2 is full control or presence control, no further spending can be made against this appropriation. This field is updated by the BE.

```
ACTION:S [1] TABLEID:ALLT [2] USERID: NFXX [3]
                    *** ALLOTMENT INQUIRY TABLE ***
KEY IS BFYS, FUND, DIVISION, ORG, PGM, BOC
BFYS: [4]  FUND: [5]  DIVISION: [6]  ORG: [7]  PGM: [8]  BOC: [9]
STATUS IND: [10]  SPENDING CONTROL OVR: [11]
APPROVED IND: [12] POST QTR: [13] TRANS TYPES - PENDING: [14] APPROVED: [15] POSTED: [16]

  APPROVED ALLOT AMT: [17]              YTD ALLOT AMT: [18]
  YTD UNLIQ COMM AMT: [19]              AVAILABLE AMT: [20]
  YTD UNLIQ OBLG AMT: [21]               EXPENDED AMT: [22]
  EST REIM TC/TT: [23]                   EST REIM AMT: [24]
    ACT REIM AMT: [25]                UNDISTRIB EST REIM: [26]
QTR   ORIG ALLOT AMT    PEND ALLOT AMT    APPRV ALLOT AMT    SUBALLOT AMT
 1        [27]             [28]              [29]             [30]
 2
 3
 4

QTR  UNLIQ COMM AMT       UNLIQ OBLG AMT      EXPENDED AMT    UNSUBALLOT AMT
1
2       [31]                 [32]               [33]             [34]
3
4
```

Figure 8:110. Allotment Inquiry Table (ALLT)

11 **Spending Control Ovr**. Displays one of the following:

C	=	Spending control is enforced at full control. The value entered here overrides the spending control in the FUN2 for this budget line.
P	=	Spending control is enforced at presence control. The value entered here overrides the spending control in the FUN2 for this budget line.
Blank	=	Spending is controlled by the allotment spending controls in the FUN2.

This field is updated by the BE, LSPC, and the update budget line spending controls offline batch process.

12 **Approved Ind**. Displays the allotment approved. This field is updated by the BE.

13 **Post Qtr**. Displays the period through which posting has occurred. This field is updated by the BE.

14 **Trans Types - Pending.** Displays the pending transaction type code that defines the type of accounting event that was used to post to ledgers and journals. This field is updated by the BE.

15 **Trans Types - Approved.** Displays the approved transaction type code that defines the type of accounting event that was used to post to ledgers and journals. This field is updated by the BE.

16 **Trans Types - Posted.** Displays the posted transaction type code for that defines the type of accounting event that was used to post to ledgers and journals. This field is updated by the BE.

17 **Approved Allot Amt.** Displays the total amount approved for all four quarters of the allotment.☞**Note:** The amount may or may not have been posted.☜ This field is updated by the BE.

18 **YTD Allot Amt.** Displays the budget authority amount for this allotment. This is the total amount approved and posted through the quarter shown in the Post Qtr field. This field is updated by the BE.

19 **YTD Unliq Comm Amt**. Displays the year-to-date total of all outstanding (open) requisitions against the allotment. This field is updated by requisitions, obligations, and payments.

20 **Available Amt**. Displays the amount available for obligations and expenditures against this allotment. If the commitment amount spending control option in the SOPT is Y, this amount is: YTD allotment amount minus (commitments plus obligations plus expenditures). Otherwise, commitments are not included in the calculation. This field is calculated by FFIS.

21 **YTD Unliq Oblg Amt.** Displays the year-to-date total of all outstanding (open) orders against the allotment. This field is updated by obligations and payments.

22 **Expended Amt.** Displays the total of all payables and direct disbursements against the allotment. This field is updated by payments, billing/cash receipt for expenditure refunds, and disbursements.

23 **Est Reim TC/TT.** Displays the type of accounting event used to post the estimated reimbursable amount to the ledgers and journals. This field is updated by the BE.

24 **Est Reim Amt.** Displays the current estimated reimbursable amount entered against this budget line. This field is updated by the BE.

25 **Act Reim Amt.** Displays the total of all reimbursements recorded against this budget line. This field is updated by cash receipt for reimbursable appropriations.

26 **Undistrib Est Reim.** Displays the estimated reimbursements amount of the allotment that was not distributed. This field is updated by the BE and the SA.

27 **Orig Allot Amt.** Displays the approved amount for each quarter prior to when the Budget Approved Indicator in the FSYR was set to **Y**. This field is updated by the BE.

28 **Pend Allot Amt.** Displays the current amounts awaiting approval for each quarter.

29 **Apprv Allot Amt.** Displays the current approved amount for each quarter. This field is updated by the BE.

30 **Suballot Amt**. Displays the amounts suballotted for each quarter. This field is updated by the SA.

31 **Unliq Comm Amt**. Displays the YTD unliquidated commitment by quarter. This field is updated by the documents given above for each amount field.

32 **Unliq Oblg Amt.** Displays the YTD unliquidated obligation by quarter. This field is updated by the documents given above for each amount field.

33 **Expended Amt.** Displays the YTD expended amounts by quarter. This field is updated by the documents given above for each amount field.

34 **Unsuballot Amt**. Displays the amount of the allotment available for suballotments. This amount is: approved allotment amount minus suballotment amount.

This field is calculated by FFIS.

After viewing the data, you have several options, as described below:

- To view another record, repeat the above process.
- To view another table, key in ***N*** at the Action field and the applicable table ID at the TableID field, then press [Enter].
- To access a document screen, key in ***L*** at the Action field and the applicable document transaction code at the TableID field. Use the [Space Bar] to erase the remaining 2 characters, then press [Enter].
- To exit the system, follow the sign-off instruction under **Part 2, Accessing The System**.

Allocation Inquiry Table (ALOC)

The ALOC is used to view:

- Information about the allocation budget level and each allocation budget line.
- Each budget line's accounting distribution and budgeted amounts.
- Commitment, obligation, and expenditure amounts.
- Estimated and actual reimbursements for each allocation line.

To access the ALOC, at the FFS screen, key in ***N*** at the Action field and ***ALOC*** at the TableID field, then press [Enter]. The ALOC screen (**Figure 8:111**) is displayed with an ***S*** in the Action field.

Displaying A Record. For instructions on displaying a record, see **Part 2, Using Tables**.

The fields on the ALOC are listed below with an explanation of each:

[1] **Action.** Displays ***S***.

[2] **TableID.** Displays ***ALOC***.

[3] **UserID.** Displays the user ID.

[4] **BFYs** 🔑. Displays the budget fiscal years of the allocation. This field is updated by the BE.

[5] **Fund** 🔑**.** Displays the fund code used in the allocation's budgetary accounting distribution. This field is updated by the BE.

[6] **Division** 🔑**.** Displays the division code used in the allocation's budgetary accounting distribution. This field is updated by the BE.

[7] **Org** 🔑 Displays the organization code used in the allocation's budgetary accounting distribution. This field is updated by the BE.

[8] **Pgm** 🔑. Displays the program code used in the allocation's budgetary accounting distribution. This field is updated by the BE.

[9] **BOC** 🔑**.** Displays the budget object code used in the allocation's budgetary accounting distribution. This field is updated by the BE.

[10] **Status Ind**. Displays one of the following:

A = Active allocation
I = Inactive allocation

If the allocation spending control option in the FUN2 is full control or presence control, no further spending can be made against this appropriation. This field is updated by the BE.

```
ACTION: S [1]  TABLEID: ALOC [2] USERID: NFxx   [3]

                      *** ALLOCATION INQUIRY TABLE ***
  KEY IS BFYS, FUND, DIVISION, ORG, PGM, BOC
  BFYS: [4]    FUND: [5]    DIVISION: [6]  ORG: [7]    PGM: [8]      BOC: [9]
  STATUS IND: [10]      SPENDING CONTROL OVR: [11]
  APPROVED IND: [12] POST QTR: [13] TRANS TYPES – PENDING: [14] APPROVED: [15] POSTED: [16]
    APPROVED ALLOC AMT: [17]                YTD ALLOC AMT: [18]
    YTD UNLIQ COMM AMT: [19]                AVAILABLE AMT: [20]
    YTD UNLIQ OBLG AMT: [21]                 EXPENDED AMT: [22]
    DESCRIPTION:   [23]
    EST REIM TC/TT: [24]                     EST REIM AMT: [25]
      ACT REIM AMT: [26]                UNDISTRIB EST REIM: [27]
 QTR   ORIG ALLOC AMT [28] PEND ALLOC AMT [29] APPRV ALLOC AMT [30]        AMT
  1                                                                        [31]
  2
  3
  4
  QTR  UNLIQ COMM AMT       UNLIQ OBLG AMT      EXPENDED AMT            AMT
  1
  2       [32]                 [33]                [34]                 [35]
  3
  4
```

Figure 8:111. Allocation Inquiry Table (ALOC)

[11] **Spending Control Ovr**. Displays one of the following:

C	=	Spending control is enforced at full control. The value entered here overrides the spending control in the FUN2 for this budget line.
P	=	Spending control is enforced at presence control. The value entered here overrides the spending control in the FUN2 for this budget line.
Blank	=	Spending is controlled by the allocation spending controls in the FUN2.

This field is updated by the BE, the LSPC, and the update budget line spending controls offline batch process.

[12] **Approved Ind**. Displays the allocation approval. This field is updated by the BE.

[13] **Post Qtr**. Displays the period through which posting has occurred. This field is updated by the BE.

[14] **Trans Types–Pending**. Displays the type of accounting event used to post to ledgers and journals. This field is updated by the BE.

[15] **Trans Types–Approved.** Displays the type of accounting event used to post to ledgers and journals. This field is updated by the BE.

[16] **Trans Types–Posted.** Displays the type of accounting event used to post to ledgers and journals. This field is updated by the BE.

[17] **Approved Alloc Amt**. Displays the total amount approved for all four quarters of the allocation.☞**Note:** The amount may or may not have been posted.☜ This field is updated by the BE.

[18] **YTD Alloc Amt**. Displays the budget authority amount for this allocation. This is the total amount approved and posted through the quarter shown in the Post Qtr field. This field is updated by the BE.

[19] **YTD Unliq Comm Amt**. Displays the year-to-date total of all outstanding (open) requisitions against the allocation. This field is updated by requisitions, obligations, and payments.

[20] **Available Amt**. Displays the amount available for obligations and expenditures against this allocation. If the commitment amount spending control option in the SOPT is ***Y***, this amount is: YTD allotment amount minus (commitments plus obligations plus expenditures). Otherwise, commitments are not included in the calculation. This field is calculated by FFIS.

[21] **YTD Unliq Oblg Amt**. Displays the year-to-date total of all outstanding (open) orders against the allocation. This field is updated by obligations and payments.

[22] **Expended Amt**. Displays the total of all payables and direct disbursements against the allocation. This field is updated by payments, billing/cash receipt for expenditure refunds, and disbursements.

[23] **Description**. Displays the description of the allocation line. This field is updated by the BE.

[24] **Est Reim TC/TT**. Displays the type of accounting event used to post the estimated reimbursable amount to the ledgers and journals. This field is updated by the BE.

[25] **Est Reim Amt**. Displays the current estimated reimbursable amount entered against this budget line. This field is updated by the BE.

[26] **Act Reim Amt**. Displays the total of all reimbursements recorded against this budget line. This field is updated by cash receipt for reimbursable appropriations.

[27] **Undistrib Est Reim**. Displays the estimated reimbursements amount of the allocation that was not distributed. This field is updated by the BE.

[28] **Orig Alloc Am**t. Displays the approved amount for each quarter prior to the time the budget approved indicator in the FSYR was set to ***Y***. This field is updated by the BE.

[29] **Pend Alloc Amt**. Displays the current amounts awaiting approval for each quarter.

[30] **Apprv Alloc Amt**. Displays the current approved amount for each quarter. This field is updated by the BE.

[31] **Amt**. Displays the amounts suballocated for each quarter, if suballocations are used and the suballocation budget control option in the FUN2 is set to ***Y***. Otherwise, this field is blank. This field is updated by the SA.

[32] **Unliq Comm Amt.** Displays the YTD unliquidated commitment by quarter. This field is updated by the documents given above for each amount field.

[33] **Unliq Oblg Amt.** Displays the YTD unliquidated obligation by quarter. This field is updated by the documents given above for each amount field.

[34] **Expended Amt.** Displays the YTD expended amounts by quarter. These field are updated by the documents given above for each amount field.

[35] **Amt**. Displays the amount of the allocation available for suballocations or allotments. This amount is: approved allocation amount minus suballo-

cated or allotted amount. This field is calculated by FFIS.

After viewing the data, you have several options, as described below:

- To view another record, repeat the above process.
- To view another table, key in ***N*** at the Action field and the applicable table ID at the TableID field, then press [Enter].
- To access a document screen, key in ***L*** at the Action field and the applicable document transaction code at the TableID field. Use the [Space Bar] to erase the remaining 2 characters, then press [Enter].
- To exit the system, follow the sign-off instruction under **Part 2, Accessing The System**.

Allotment Status Inquiry Table (ALST)

The ALST is used to view:

- A year-to-date status of budget and spending activity for multiple allotments.
- Fund availability for each allotment line.

To access the ALST, at the FFS screen, key in ***N*** at the Action field and ***ALST*** at the TableID field, then press [Enter]. The ALST screen (**Figure 8:112**) is displayed with an ***S*** in the Action field.

Displaying A Record. For instructions on displaying a record, see **Part 2, Using Tables**.

The fields on the ALST are listed below with an explanation of each:

[1] **Action.** Displays ***S***.

[2] **TableID.** Displays ***ALST***.

[3] **UserID.** Displays the user ID.

[4] **BFYs** 🔑. Displays the budget fiscal years in which the the initial budget was established. This field is updated by the BE.

[5] **Fund** 🔑. Displays the fund code used in the allotment's budgetary accounting distribution. This field is updated by the BE.

[6] **Division** 🔑. Displays the division code used in the allotment's budgetary accounting distribution. This field is updated by the BE.

[7] **Org** 🔑. Displays the organization code used in the allotment's budgetary accounting distribution. This field is updated by the BE.

[8] **Pgm** 🔑. Displays the program code used in the allotment's budgetary accounting distribution. This field is updated by the BE.

[9] **BOC** 🔑. Displays the budget object code used in the allotment's budgetary accounting distribution. This field is updated by the BE.

[10] **YTD Allot Amt**. Displays the total budget amount posted and made available for all fiscal quarters, for this allotment. This field is updated by the BE.

[11] **YTD Commitments**. Displays the total of all outstanding (open) requisitions or unliquidated commitments against this line for all fiscal quarters. This field is updated by requisitions, obligations, and payments.

[12] **YTD Obligations**. Displays the total of all outstanding orders or unliquidated obligations against this line for all fiscal quarters. This field is updated by obligations and payments.

[13] **YTD Expenditures**. Displays the total of all expenditures and direct disbursements against this line for all fiscal quarters. This field is updated by payments, billing/cash receipt for expenditure refunds, and disbursements.

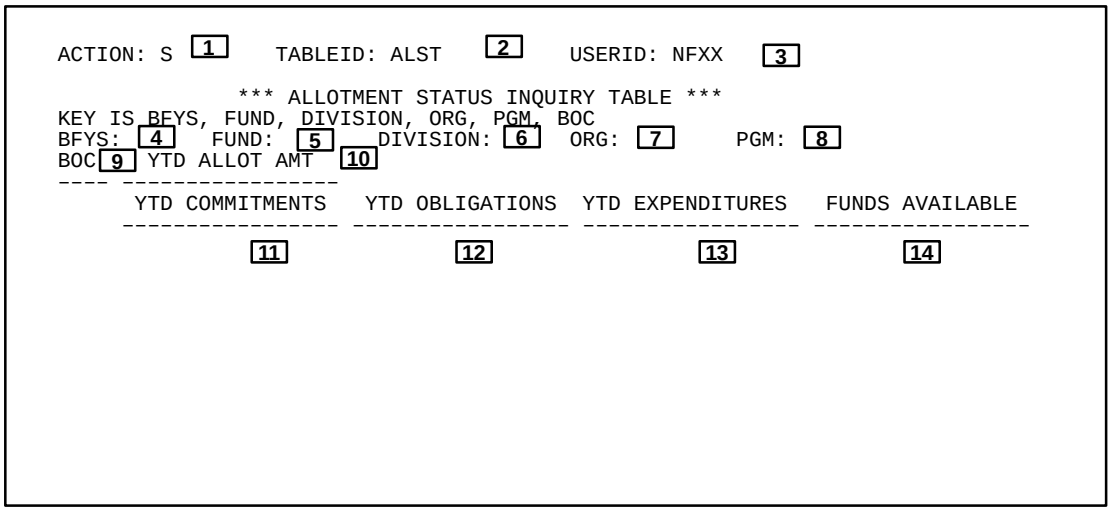

Figure 8:112. Allotment Status Inquiry Table (ALST)

14 **Funds Available**. Displays the funds available calculated as: allotment amount minus (committed plus obligated plus expended) for all fiscal quarters if the SOPT option is set to **Y**. Displays funds available calculated as: allotment amount minus (obligated plus expended) for all fiscal quarters if the SOPT option is set to ***N***. This field is calculated by FFIS.

After viewing the data, you have several options, as described below:

- To view another record, repeat the above process.
- To view another table, key in ***N*** at the Action field and the applicable table ID an the TableID field, then press [Enter].
- To access a document screen, key in ***L*** at the Action field and the applicable document transaction code at the TableID field. Use the [Space Bar] to erase the remaining 2 characters, then press [Enter].
- To exit the system, follow the sign-off instruction under **Part 2, Accessing The System**.

Appropriation/Public Law Inquiry Table (APLT)

The APLT is used to view:

- Information about appropriations by public law.
- The public law identifier.
- The warrant number.
- The approval date.
- The appropriation amount.

To access the APLT, at the FFS screen, key in ***N*** at the Action field and ***APLT*** at the TableID field, then press [Enter]. The APLT screen (**Figure 8:113**) is displayed with an ***S*** in the Action field.

Displaying A Record. For instructions on displaying a record, see **Part 2, Using Tables**.

The fields on the APLT are listed below with an explanation of each:

[1] **Action.** Displays ***S***.

[2] **TableID.** Displays ***APLT***.

[3] **UserID.** Displays the user ID.

[4] **Fisc Year** 🔑**.** Displays the fiscal year of the appropriation. This field is updated by the AA.

[5] **BFYs** 🔑**.** Displays the budget fiscal years of the appropriation. This field is updated by the AA.

[6] **Fund** 🔑**.** Displays the fund identifying the appropriation. This field is updated by the AA.

[7] **Public Law** 🔑**.** Displays the public law authorizing the appropriation. This field is updated by the AA.

[8] **Warrant#** 🔑**.** Displays the warrant number assigned to the appropriation by Treasury when the appropriation was approved.

[9] **Approval Date.** Displays the date the appropriation was approved. This field is updated by the AA.

[10] **Amount.** Displays the appropriation amount. This field is updated by the AA.

After viewing the data, you have several options, as described below:

- To view another record, repeat the above process.
- To view another table, key in ***N*** at the Action field and the applicable table ID at the TableID field, then press [Enter].
- To access a document screen, key in ***L*** at the Action field and the applicable document transaction code at the TableID field. Use the [Space Bar] to erase the remaining 2 characters, then press [Enter].
- To exit the system, follow the sign-off instruction under **Part 2, Accessing The System**.

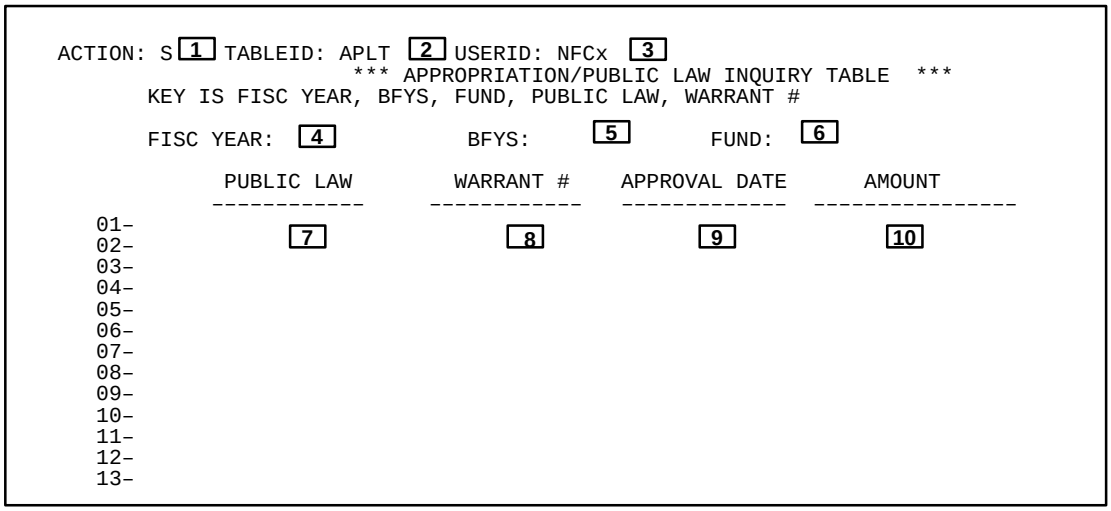

Figure 8:113. Appropriation/Public Law Inquiry Table (APLT)

Apportionment Inquiry Table (APOR)

The APOR is used to view:

- The status of an apportionments.
- The total budget authority for the apportionment.
- Pending and approved amounts by quarter.
- Deferred amounts.
- Year-to-date commitment, obligation, and expenditure amounts.

To access the APOR, at the FFS screen, key in ***N*** at the Action field and ***APOR*** at the TableID field, then press [Enter]. The APOR screen (**Figure 8:114**) is displayed with an ***S*** in the Action field.

Displaying A Record. For instructions on displaying a record, see Part 2, Using Tables.

The fields on the APOR are listed below with an explanation of each:

[1] **Action.** Displays ***S***.

[2] **TableID.** Displays ***APOR***.

[3] **UserID.** Displays the user ID.

[4] **Budget Fiscal Years** 🔑. Displays the budget fiscal years of the apportionment. This field is updated by the AA.

[5] **Fund** 🔑. Displays the appropriation to which the apportionment belongs. This field is updated by the AA.

[6] **Status Ind**. Displays one of the following:

A = Active appropriation
I = Inactive appropriation

If the Apportionment Spending Control Option in the FUN2 is set to ***C*** or ***P***, no further spending can be made against this appropriation. This field is updated by the AA.

[7] **Amt Avail for Appor**. Displays the amount available for apportionment. This amount is computed as: approved appropriation amount minus statutory reserve amount minus lapsed amount plus carryover amount plus greater of estimated and actual recoveries plus estimated or actual reimbursement amount plus restoration/withdrawal amount. This field is updated by the AA.

[8] **YTD Appor Amt**. Displays the total amount approved and posted for all four quarters. This field is updated by the PA.

[9] **YTD Unliq Comm Amt**. Displays the inception-to-date total of all outstanding (open) requisitions against this appropriating. This field is updated by requisitions, obligations, and payments.

[10] **YTD Amt.** Displays the total of approved allocations for all allocations belonging to this appropriation if allocation budget control is in effect. Displays the total of approved allotments for all allotments belonging to this appropriation if allotment budget control is in effect. Otherwise, this field is blank. This field is updated by the BE.

[11] **YTD Unliq Oblg Amt.** Displays the inception-to-date total of all outstanding (open) orders against this appropriation. This field is updated by obligations and payments.

```
ACTION:S [1] TABLEID:APOR [2] USERID: NFXX [3]
                  *** APPORTIONMENT INQUIRY TABLE ***
KEY IS BUDGET FISCAL YEARS, FUND
     BUDGET FISCAL YEARS: [4]    FUND: [5]        STATUS IND: [6]
AMT AVAIL FOR APPOR: [7]                      YTD APPOR AMT:  [8]
 YTD UNLIQ COMM AMT: [9]                      YTD       AMT:  [10]
 YTD UNLIQ OBLG AMT: [11]                  PY REC WITH AMT:  [12]
   YTD EXPENDED AMT: [13]                    AVAILABLE AMT:  [14]
PERIOD 1-4 TRANS TYPES - PENDING: [15] APPROVED: [16] POSTED:  [17]
  DEFERRED TRANS TYPES - PENDING: [18] APPROVED: [19] POSTED:  [20]

QTR     ORIG APPOR AMT    PEND APPOR AMT   APPRV APPOR AMT              AMT
 1           [21]              [22]             [23]                    [24]
 2
 3
 4
-D-

QTR  UNLIQ COMM AMT      UNLIQ OBLG AMT       EXPENDED AMT               AMT
 1         [25]             [26]                 [27]                   [28]
 2
 3
 4
```

Figure 8:114. Apportionment Inquiry Table (APOR)

[12] **PY Rec With Amt**. Displays the amount recovered (withdrawn) from this appropriation. This field is updated by requisitions, obligations, and payments.

[13] **YTD Expended Amt.** Displays the inception-to-date total of all payables and direct disbursements against this appropriation. This field is updated by payments, billing/cash receipts for expenditure refunds, and disbursements.

[14] **Available Amt**. Displays the amount available for spending against this appropriation. If the Commitment Spending Control Option is ***Y*** in the SOPT, this amount is equal to: YTD apportionment amount minus (commitments plus obligations plus expended amounts). Otherwise, commitments are not included. This field is calculated by FFIS.

[15] **Period 1–4 Trans Types – Pending.** Displays the type of accounting event used to post to ledgers and journals. This field is updated by the AA and the PA.

[16] **Period 1–4 Trans Types – Approved.** Displays the type of accounting event used to post to ledgers and journals. This field is updated by the AA and the PA.

[17] **Period 1–4 Trans Types – Posted.** Displays the type of accounting event used to post to ledgers and journals. This field is updated by the AA and the PA.

[18] **Deferred Trans Types – Pending.** Displays the type of accounting event used to post to ledgers and journals. This field is updated by the AA and the PA.

[19] **Deferred Trans Types – Approved.** Displays the type of accounting event used to post to ledgers and journals. This field is updated by the AA and the PA.

[20] **Deferred Trans Types – Posted.** Displays the type of accounting event used to post to ledgers and journals. This field is updated by the AA and the PA.

[21] **Orig Appor Amt.** Displays the approved apportionment amount prior to when the Approved Budget Indicator in the FSYR was set to ***Y***. These amounts are only kept for historical purposes. This field is updated by the PA.

[22] **Pend Appor Amt**. Displays the current amounts awaiting approval for each quarter, including any deferred amounts. This field is updated by the AA.

[23] **Apprv Appor Amt**. Displays the current approved amounts for each quarter, including any deferred amounts. **Note:** These amounts may or may not have been posted. This field is updated by the PA.

[24] **Amt.** Displays the sum of allocation or allotment amounts. If the allocation budget control is in effect, these are allocation amounts. If allocations are not used, but allotment budget control is in effect, these are allotment amounts. Otherwise, this field is blank. This field is updated by the BE.

[25] **Unliq Comm Amt.** Displays the YTD unliquidated commitment amount by quarter. This field is updated by the documents given above for each amount field.

[26] **Unliq Oblg Amt.** Displays the YTD unliquidated obligation amount by quarter. This field is updated by the documents given above for each amount field.

[27] **Expended Amt.** Displays the YTD expended amount by quarter. This field is updated by the documents given above for each amount field.

[28] **Amt**. Displays the amount of the apportionment available for allocations or allotments. This amount is calculated based on: approved apportionment amount minus allocated amount or allotted amount. This field is calculated by FFIS.

After viewing the data, you have several options, as described below:

- To view another record, repeat the above process.
- To view another table, key in ***N*** at the Action field and the applicable table ID at the TableID field, then press [Enter].
- To access a document screen, key in ***L*** at the Action field and the applicable document transaction code at the TableID field. Use the [Space Bar] to erase the remaining 2 characters, then press [Enter].
- To exit the system, follow the sign-off instruction under **Part 2, Accessing The System**.

Appropriation Inquiry Table (APPR)

The APPR is used to view:

- The status of an appropriation.
- Appropriation amounts.
- Apportionment and allocation or allotment totals.
- Committed, obligated, and expended amounts.
- Spending adjustments for expired appropriations.

To access the APPR, at the FFS screen, key in ***N*** at the Action field and ***APPR*** at the TableID field, then press [Enter]. The APPR screen (**Figure 8:115**) is displayed with an ***S*** in the Action field.

Displaying A Record. For instructions on displaying a record, see **Part 2, Using Tables**.

The fields on the APPR are listed below with an explanation of each:

[1] **Action.** Displays ***S***.

[2] **TableID.** Displays ***APPR***.

[3] **UserID.** Displays the user ID.

[4] **Budget Fiscal Years** 🔑. Displays the budget fiscal years of the appropriation. This field is updated by the AA.

[5] **Fund** 🔑. Displays the fund identifying the appropriation. This field is updated by the AA.

[6] **Status Ind**. Displays one of the following:

A = Active appropriation
I = Inactive appropriation

Note: If the Appropriation Control Spending Option in the FUN2 is full control or presence control, no further spending can be made against this appropriation.

This field is updated by the AA.

[7] **Est Reim Opt**. Displays the reimbursement amount used to calculate the net amount available for the appropriation. This amount determines the amount used to limit the apportionment YTD budget authority. Valid values are:

N = Do **not** include reimbursements
E = Include **estimated** reimbursements
A = Include **actual** reimbursements
L = Include the **lesser** of actual and estimated reimbursements

This field is updated by the AA.

[8] **Original Appr Amt**. Displays the total of the approved appropriation amount. Includes transfers in and transfers out. Does not include reimbursement, lapsed, carryover, or statutory reserve amounts.

Note: If the Budget Approved Indicator in the FSYR is **Y**, the amount is frozen and kept for historical purposes only.

This field is updated by the AA.

[9] **Transfers In**. Displays the total of all transfers of dollars into the appropriation. This field is updated by the AA with an Appropriation Indicator of ***T***.

[10] **Approved Appr Amt**. Displays the current amount for the appropriation. This amount includes transfers in and out, but does not include reimbursement, lapsed, carryover, or statutory reserve amounts. This field is updated by the AA.

```
ACTION:S [1]  TABLEID: APPR [2]  USERID: NFxx  [3]
                ***APPROPRIATION INQUIRY TABLE ***
KEY IS BUDGET FISCAL YEARS, FUND

 BUDGET FISCAL YEARS: [4]   FUND: [5]     STATUS IND: [6]  EST REIM OPT:  [7]

 ORIGINAL APPR AMT: [8]                      TRANSFERS IN:  [9]
 APPROVED APPR AMT: [10]                    TRANSFERS OUT:  [11]
      EST REIM AMT: [12]                       LAPSED AMT:  [13]
   ACTUAL REIM AMT: [14]                    CARRYOVER AMT:  [15]
  STAT RESERVE AMT: [16]                      EXPIRED AMT:  [17]
 REIM AGREEMNT AMT: [18]                  UP SPEND ADJ AMT:  [19]
 DIR AGREEMENT AMT: [20]                  DN SPEND ADJ AMT:  [21]
  EST RECOVERY AMT: [22]                  ACT RECOVERY AMT:  [23]
   PY REC WITH AMT: [24]
    UNLIQ COMM AMT: [25]                     YTD APPOR AMT:  [26]
    UNLIQ OBLG AMT: [27]                     YTD       AMT:  [28]
      EXPENDED AMT: [29]                  UNAPPOR APPR AMT:  [30]
   APPR TRANS CODE: [31]          APPORTIONMENT AVAIL AMT:  [32]
   APPR TRANS TYPE: [33]          APPROPRIATION AVAIL AMT:  [34]
                                UNDISTRIBUTED EST REIM AMT:  [35]
                            RESTORATIONS / WITHDRAWALS AMT:  [36]
```

Figure 8:115. Appropriation Inquiry Table (APPR)

[11] **Transfers Out**. Displays the total of all transfers of dollars out of the appropriation. This field is updated by the AA with an Appropriation Indicator of ***T***.

[12] **Est Reim Amt**. Displays the current estimated reimbursement amount, including all modifications made to this amount. This field is updated by the AA.

[13] **Lapsed Amt**. Displays the amount attributable to lapses in fund availability. This amount is not included in the approved appropriation amount. This field is updated by the AA with an Appropriation Indicator of ***L*** and the FFIS Annual Closing process.

[14] **Actual Reim Amt**. Displays the total of all reimbursements recorded against this appropriation. This field is updated by standard vouchers and cash receipts for reimbursable appropriations.

[15] **Carryover Amt**. Displays the amount attributable to a carryover from a prior budget fiscal year. This amount is not included in the approved appropriation amount. This field is updated by the FFIS Annual Closing process.

[16] **Stat Reserve Amt**. Displays the current statutory reserve amount, including all modifications made to this amount. This field is updated by the AA.

[17] **Expired Amt**. Displays the funds expired for this appropriation. This field is updated by the FFIS Annual Closing process.

[18] **Reim Agreemnt Amt**. Displays a comparison of the total amount of actual reimbursable agreements accepted to the total estimated reimbursements recorded in the appropriation record.

[19] **Up Spend Adj Amt**. Displays the amount of upward spending adjustments after the appropriation has expired. This field is updated by spending documents against expired appropriations.

[20] **Dir Agreement Amt.** Displays the limit used of the total amount of direct agreement associated with this fund to the total approved appropriation amount. This field is updated by the FPCA with the maximum amount from all records related to direct customers, if the CTYP has a Direct Indicator of ***Y*** for the customer type associated with the FPCA record.

[21] **Dn Spend Adj Amt**. Displays the amount of downward spending adjustments after the appropriation has expired. This field is updated by spending documents against expired appropriations.

[22] **Est Recovery Amt**. Displays the estimated prior year recovery amount. This field is updated by the AA.

[23] **Act Recovery Amt**. Displays the actual recovery amount from a prior year. This field is updated by spending documents.

[24] **Py Rec With Amt**. Displays the amount recovered (withdrawn) from this appropriation. This field is updated by the spending documents.

[25] **Unliq Comm Amt.** Displays the total of all outstanding (open) requisitions against this appropriation. This field is updated by requisitions, obligations, and payments.

[26] **YTD Appor Amt**. Displays the total amount approved and posted for all four apportionment quarters. This field is updated by the PA.

[27] **Unliq Oblg Amt**. Displays the total of all outstanding (open) orders against this appropriation. This field is updated by obligations and payments.

[28] **YTD Amt**. Displays the total of all approved allocations belonging to this appropriation, if the allocation budget control is in effect. If allotment budget control is in effect, but not allocation budget control, this field shows the total approved allotments for all allotments belonging to this appropriation. Otherwise, this field is blank. This field is updated by the BE.

[29] **Expended Amt**. Displays the total of all payables and direct disbursements against this appropriation. This field is updated by payments, billing/cash receipt for expenditure refunds, and disbursements.

[30] **Unappor Appr Amt**. Displays the amount of this appropriation not yet included in the posting cycle for apportionments. This field is calculated by FFIS.

[31] **Appr Trans Code**. Displays the transaction code used to enter the AA. This field is updated by the AA.

[32] **Apportionment Avail Amt**. Displays the amount available for obligations, commitments, and expenditures against this apportionment. If the SOPT commitment amount spending control option is ***Y***, the amount is calculated based on: YTD apportionment amount minus prior year recoveries withdrawn minus (commitments plus obligations plus expenditures). Otherwise, commitments are not included in the calculation. This field is calculated by FFIS.

[33] **Appr Trans Type.** Displays the accounting event used to update the journal and ledgers. This field is updated by the AA.

[34] **Appropriation Avail Amt.** Displays the amount available for spending against the appropriation. Calculated based on: approved appropriation amount plus estimated or actual reimbursement amount minus statutory reserve amount minus lapsed amount plus carry-

over amount (If a no year fund) minus expired amount (If a no year fund) plus actual recoveries minus prior year recoveries withdrawn minus commitments (If SOPT commitment spending option is ***Y*** and the fund has not expired) minus obligations minus expenditures. This field is calculated by FFIS.

[35] **Undistributed Est Reim Amt**. Displays the estimated reimbursements amount of this appropriation that was not distributed. This field is updated by the AA and the BE.

[36] **Restorations/Withdrawals Amt**. Displays the funds restored to an appropriation after its expiration. This field is updated by the AA with an Appropriation Indicator of ***R*** to restore unobligated balances to expired accounts.

After viewing the data, you have several options, as described below:

- To view another record, repeat the above process.

- To view another table, key in ***N*** at the Action field and the applicable table ID at the TableID field, then press [Enter].

- To access a document screen, key in ***L*** at the Action field and the applicable document transaction code at the TableID field. Use the [Space Bar] to erase the remaining 2 characters, then press [Enter].

- To exit the system, follow the sign-off instruction under **Part 2, Accessing The System**.

Accounts Receivable Case History Line Inquiry Table (ARCL)

The ARCL is used to view detailed history information for each receivable that has a Case History flag in the ARHT set to ***Y***.

To access the ARCL, at the FFS screen, key in ***N*** at the Action field and ***ARCL*** at the TableID field, then press [Enter]. The ARCL screen (**Figure 8:116**) is displayed with an ***S*** in the Action field.

Displaying A Record. For instructions on displaying a record, see **Part 2, Using Tables**.

The fields on the ARCL are listed below with an explanation of each:

1 **Action.** Displays ***S***.

2 **TableID.** Displays ***ARCL***.

3 **UserID.** Displays the user ID.

4 **Payer Code**. Displays the payer code related to the account history. This field is updated by the Overdue Charge batch process, the Account Referral batch process, the Accounts Receivable Case History Update batch process, the Dunning Notice batch process, the Bill Generation batch process, and the INBT.

5 **Billing Doc ID**. Displays the Billing document number for which account activity information. This field is updated by the Overdue Charge batch process, the Account Referral batch process, the Accounts Receivable Case History Update batch process, the Dunning Notice batch process, the Bill Generation batch process, and the INBT.

6 **Payer Name.** Displays the name associated with the payer code. This field is updated by the Overdue Charge batch process, the Account Referral batch process, the Accounts Receivable Case History Update batch process, the Dunning Notice batch process, the Bill Generation batch process, and the INBT.

7 **Trans Date**. Displays the date this document was accepted by the system. This field is updated by the Overdue Charge batch process, the Account Referral batch process, the Accounts Receivable Case History Update batch process, the Dunning Notice batch process, the Bill Generation batch process, and the INBT.

8 **BD Line No.** Displays the Billing document line number for which account activity information. This field is updated by the Overdue Charge batch process, the Account Referral batch process, the Accounts Receivable Case History Update batch process, the Dunning Notice batch process, the Bill Generation batch process, and the INBT.

```
ACTION: S [1]  TABLEID: ARCL [2]  USERID: NFxx  [3]
      ***  ACCOUNTS RECEIVABLE CASE HISTORY LINE INQUIRY TABLE ***
KEY IS PAYER CODE, BILLING DOC ID, TRANS DATE, BD LINE NO

PAYER CODE: [4]            BILLING DOC ID: [5]
PAYER NAME: [6]

                BD
      TRANS    LINE  AC  TR  ACTN  REF       TRANSACTION
      DATE      NO   CD  TP  OUT   DEST         AMOUNT              BALANCE
    --------  ----  --  --  ----  ---- ------------------- -------------------
01    [7]      [8]  [9] [10] [11]  [12]         [13]                [14]
                          DOCUMENT ID:   [15]          LINE #: [16]
02-
                          DOCUMENT ID:                 LINE #:
03-
                          DOCUMENT ID:                 LINE #:
04-
                          DOCUMENT ID:                 LINE #:
05-
                         DOCUMENT ID:                 LINE #:
```

Figure 8:116. Accounts Receivable Case History Line Inquiry Table (ARCL)

9 **Ac Cd.** Displays the activity code that identifies the activity that has taken place on this Billing document line:

AW	=	CR generated by Recurring Cash Receipt process
WO	=	Write-off
CR	=	Original entry Cash Receipt document
CA	=	Modifying Cash Receipt document
BD	=	Original entry Billing document
PC	=	Penalty charge
AC	=	Administrative charge
IC	=	Interest charge
BA	=	Modifying Billing document
AR	=	Account referral
DN	=	Dunning notice sent
SB	=	Standard (non-installment) bill
IB	=	Installment bill
ID	=	INBT entry w/o previous case history

This field is updated by the Overdue Charge batch process, the Account Referral batch process, the Accounts Receivable Case History Update batch process, the Dunning Notice batch process, the Bill Generation batch process, and the INBT.

10 **Tr Tp.** Displays the transaction type used to post to the ledgers. This field is updated by the Accounts Receivable Case History Update batch process, the Account Referral batch process, and the Overdue Charge batch process.

11 **Actn Out.** Displays the type of action out that was used on a Cash Receipt document or Billing document. This field is updated by the Accounts Receivable Case History Update batch process.

12 **Ref Dest.** Displays the referral destination of the account to which referred. This field is updated by the Account Referral batch process.

13 **Transaction Amount.** Displays the amount of activity against this Billing document line. This field is updated by the Overdue Charge batch process, the Account Referral batch process, the Accounts Receivable Case History Update batch process, the Dunning Notice batch process, the Bill Generation batch process, and the INBT.

14 **Balance.** Displays the current outstanding balance for this account. This field is calculated by FFIS.

15 **Document ID.** Displays the document line numbers of all Cash Receipt and Billing documents that affect the account history. This field is updated by the Accounts Receivable Case History Update batch process.

16 **Line #.** Displays the document line numbers of all Cash Receipt and Billing documents that affect the account history. This field is updated by the Accounts Receivable Case History Update batch process.

After viewing the data, you have several options, as described below:

- To view another record, repeat the above process.

- To view another table, key in ***N*** at the Action field and the applicable table ID at the TableID field, then press [Enter].

- To access a document screen, key in ***L*** at the Action field and the applicable document transaction code at the TableID field. Use the [Space Bar] to erase the remaining 2 characters, then press [Enter].

- To exit the system, follow the sign-off instruction under **Part 2, Accessing The System**.

Accounts Receivable Referral Inquiry Table (AREF)

The AREF is used to view:

- Receivables eligible for referral.
- The current outstanding amount for this receivable, the date the account became delinquent, and the last date a payment was made against this account.

To access the AREF, at the FFS screen, key in ***N*** at the Action field and ***AREF*** at the TableID field, then press [Enter]. The AREF screen (**Figure 8:117**) is displayed with an ***S*** in the Action field.

Displaying A Record. For instructions on displaying a record, see **Part 2, Using Tables**.

The fields on the AREF are listed below with an explanation of each:

1 **Action.** Displays ***S***.

2 **TableID.** Displays ***AREF***.

3 **UserID.** Displays the user ID.

4 **Payer Code** 🔑. Displays the payer code for the debtor who is being referred. This field is updated by the Accounts Receivable Referral batch process.

5 **Billing Doc ID** 🔑. Displays the Billing document number of the account being referred. This field is updated by the Accounts Receivable Referral batch process.

6 **Selected For Referral Date.** Displays the date the receivable was added to this table. This field is updated by the Accounts Receivable Referral batch process.

7 **Current Balance.** Displays the current outstanding amount for this account. This field is updated by the Accounts Receivable Referral batch process.

8 **Cause Of Overpayment.** Displays the cause of overpayment for this account. This field is updated by the Accounts Receivable Referral batch process.

9 **Last Payment Date.** Displays the date the last payment was made against this account. This field is updated by the cash receipt document.

10 **Status Date.** Displays the date the referral status was changed. This field is updated by direct entry to the AREF.

11 **Referral Status.** Displays the current status in the referral process for this account. When the record is added to this table, the status is set to ***N*** by the offline process. You may only change this status to ***S*** (i.e., suppress referral). If you enter a destination code for this record, the status is automatically set to ***Y***. If this status is set to ***Y*** when the Referral Report is run, the process changes the status to ***R*** and assess the one-time administrative fee entered in the ARDT. This field is updated by the Accounts Receivable Referral batch process and by direct entry to the AREF.

12 **Referred Amount.** Displays the amount referred to an outside agency. If the destination code is entered and no referral amount is entered, the amount defaults to the current balance. This field is updated by direct entry to the AREF.

13 **Referral Date.** Displays the date the account was referred to a collection agency. If the destination code is entered and no referral date is entered, the date defaults to the current date. This field is updated by direct entry to the AREF.

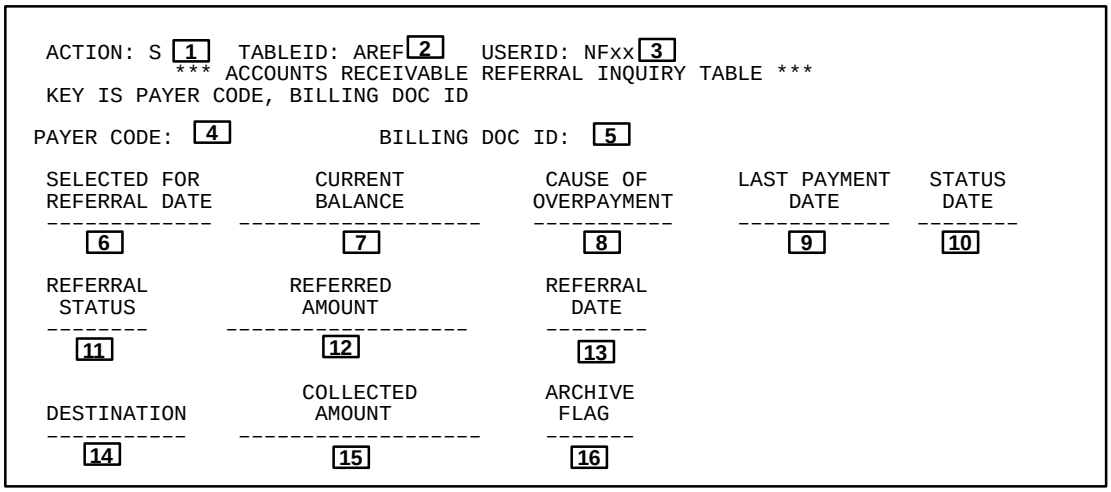

Figure 8:117. Accounts Receivable Referral Inquiry Table (AREF)

[14] **Destination.** Displays the destination code for the account to be referred. This field is updated by direct entry to the AREF.

[15] **Collected Amount.** Displays the amount of cash received after the account was referred. This field is updated by the cash receipt document.

[16] **Archive Flag.** Displays ***Y*** to archive records in this table. The value defaults to ***N*** and can only be set to ***Y*** if the current balance is zero. This field is updated by direct entry to the AREF.

After viewing the data, you have several options, as described below:

- To view another record, repeat the above process.

- To view another table, key in ***N*** at the Action field and the applicable table ID at the TableID field, then press [Enter].

- To access a document screen, key in ***L*** at the Action field and the applicable document transaction code at the TableID field. Use the [Space Bar] to erase the remaining 2 characters, then press [Enter].

- To exit the system, follow the sign-off instruction under **Part 2, Accessing The System**.

Receivable Header Inquiry Table (ARHT)

The ARHT is used to view summary information of all outstanding and some recently closed Accounts Receivable documents.

To access the ARHT, at the FFS screen, key in ***N*** at the Action field and ***ARHT*** at the TableID field, then press [Enter]. The ARHT screen (**Figure 8:118**) is displayed with an ***S*** in the Action field.

Displaying A Record. For instructions on displaying a record, see **Part 2, Using Tables**.

The fields on the ARHT are listed below with an explanation of each:

[1] **Action.** Displays ***S***.

[2] **TableID.** Displays ***ARHT***.

[3] **UserID.** Displays the user ID.

[4] **Trans Code** 🔑. Displays the transaction code that applies to this receivable document.

[5] **Doc Num** 🔑. Displays the document number of the receivable document.

[6] **Doc Type.** Displays the document type code from the Billing document of ***T*** for Transportation Billing documents.

[7] **Document Date.** Displays the date associated with this receivable document.

[8] **Comments.** Displays any comments associated with this Billing document.

[9] **Payer Code/Name.** Displays the code and name of the payer who owes money to the agency.

[10] **Address.** Displays the address of the payer who owes money to the agency.

[11] **City State Zip.** Displays the city, state and zip code of the payer who owes money to the agency.

[12] **Coll Due Date.** Displays the date the funds are expected to be received from the debtor. This field is updated by the Bill Generation batch process.

[13] **Last Bill Date.** Displays the date the last bill was sent for this receivable. This field is updated by the Bill Generation batch process.

[14] **Last Bill Amt.** Displays the amount outstanding on the receivable when the last bill was sent for this account. This field is updated by the Bill Generation batch process.

```
ACTION: S [1]   TABLEID: ARHT [2]   USERID: NFxx [3]
                *** RECEIVABLE HEADER INQUIRY TABLE ***
KEY IS TRANS CODE, DOC NUM

TRANS CODE: [4] DOC NUM: [5]                DOC TYPE: [6]
        DOCUMENT DATE: [7]                  COMMENTS: [8]
      PAYER CODE/NAME: [9]              /
              ADDRESS: [10]

                 CITY: [11]                    STATE:    ZIP:      -
COLL DUE DATE: [12]              LAST BILL DATE/AMT: [13]      / [14]
PRINT BILL:    [15]  BILL PRINT DATE: [16]          BILLED AMT: [17]
INT RATE:      [18]    INT APPLY DATE: [19]       INTEREST AMT: [20]
TEXT TYPE: [21]  ADM CHGS APPLY DATE: [22]       ADM CHGS AMT: [23]
WAIVER FLAG:   [24]   PEN APPLY DATE: [25]         PENALTY AMT: [26]
DUNNING COUNT: [27]    LAST DUN DATE: [28]           TOTAL AMT: [29]
OVERDUE STATUS: [30]     OVERDUE DATE: [31]      COLLECTED AMT: [32]
WRITE-OFF FLAG: [33]  WRITE-OFF DATE: [34]       AGREEMENT NUM: [35]
WRITE-OFF REASON: [36]  WRITE-OFF AMT: [37]                CASE HISTORY FLAG: [38]
DOC CLOSING DATE:  [39]                  CLOSED DOCUMENT AMT: [40]
OVERPAYMENT CAUSE: [41]                    REPRINT BILL AMT: [42]
```

Figure 8:118. Receivable Header Inquiry Table (ARHT)

[15] **Print Bill.** Displays a flag to indicate whether or not a bill should be printed:

- ***Y*** = This bill should be printed.
- ***C*** = This bill should be continually printed.
- ***S*** = This bill printing should be suppressed.
- ***E*** = This bill printing should be suppressed and not directly update ARHT with bill print information.
- ***N*** = This bill should not be printed.
- ***P*** = This bill has been printed.

This field is updated by the Bill Generation batch process.

[16] **Bill Print Date.** Displays the date the bill was printed. This field is updated by the Bill Generation batch process.

[17] **Billed Amt.** Displays the current principal amount of this receivable document. It reflects all adjustment actions made on the original principal amount.

[18] **Int Rate.** Displays the interest rate that will be used if interest is applied to the receivable. This field is updated by the AROP.

[19] **Int Apply Date.** Displays the date that interest was last applied to the receivable. This field is updated by the AROP and the Overdue Charges batch process.

[20] **Interest Amt.** Displays the amount of interest that has been charged to this receivable. This field is updated by the Overdue Charges batch process.

[21] **Text Type.** Displays the text type, the standard clauses to be printed on the bill.

[22] **Adm Chgs Apply Date.** Displays the date that administrative charges were last applied to this receivable. This field is updated by the Overdue Charges batch process.

[23] **Adm Chgs Amt.** Displays the amount of administrative charges that were applied to this receivable. This field is updated by the Overdue Charges batch process.

[24] **Waiver Flag.** Displays a flag to indicate whether interest, administrative charges, or penalties should be waived for this receivable:

- ***I*** = Waive interest only
- ***A*** = Waive administrative charges only
- ***P*** = Waive penalties only
- ***W*** = Waive interest, administrative charges, and penalties
- ***IA*** = Waive interest and administrative charges
- ***IP*** = Waive interest and penalties
- ***AP*** = Waive administrative charges and penalties

[25] **Pen Apply Date.** Displays the date that penalties were last applied to this receivable. This field is updated by the Overdue Charges batch process.

[26] **Penalty Amt.** Displays the amount of penalties that were applied to this receivable. This field is updated by the Overdue Charges batch process.

[27] **Dunning Count.** Displays the number of dunning notices that have been sent to the debtor for this receivable. This field is updated by the Dunning Notice batch process.

[28] **Last Dun Date.** Displays the date the last dunning notice was sent to the debtor. This field is updated by the Dunning Notice batch process.

[29] **Total Amt.** Displays the sum of the billed amount, interest amount, administrative charges amount, and penalty amount for this receivable. This field is calculated by FFIS.

[30] **Overdue Status.** Displays the action that has been taken on the overdue receivable. This field is updated by direct entry to the OBDT.

[31] **Overdue Date.** Displays the date the overdue status code was recorded. This field is updated by direct entry to the OBDT.

[32] **Collected Amt.** Displays the total amount received so far on this receivable document (i.e., the total of all cash receipts referencing this invoice).

[33] **Write-Off Flag.** Displays a ***Y*** if the receivable is written-off. Displays a ***P*** if the receivable was selected for write-off, but was not written-off. This field is updated by the Write-Off batch process.

[34] **Write-Off Date.** Displays the date the receivable was written-off. This field is updated by the Write-Off batch process.

[35] **Agreement Num.** Displays a code used to identify the appropriate record in the CAHT and the CALT if this cash receipt references a customer agreement.

[36] **Write-Off Reason.** Displays the reason the receivable was written-off. This field is updated by the Write-Off batch process.

[37] **Write-Off Amt.** Displays the amount of the receivable that was written-off. This field is updated by the Write-Off batch process.

38 **Case History Flag.** Displays a ***Y*** if the ARCL entry is created for each transaction affecting this receivable document. Displays a ***N***, if the ARCL entries are created. This flag is initially set by the Case History flag in the receivable document and is automatically set to ***Y*** if the INBT entry is added for this receivable document. This field is updated by the BD.

39 **Doc Closing Date.** Displays the date on which this document was closed (i.e., when all lines belonging to this receivable document are closed in the ARLT).

40 **Closed Document Amt.** Displays the amount of the document liquidated by Cash Receipts.

41 **Overpayment Cause.** Displays the cause of overpayment for this receivable document.

42 **Reprint Bill Amt.** Displays the amount for which the bill was reprinted. This field is updated by the Bill Generation batch process.

After viewing the data, you have several options, as described below:

- To view another record, repeat the above process.
- To view another table, key in ***N*** at the Action field and the applicable table ID at the TableID field, then press [Enter].
- To access a document screen, key in ***L*** at the Action field and the applicable document transaction code at the TableID field. Use the [Space Bar] to erase the remaining 2 characters, then press [Enter].
- To exit the system, follow the sign-off instruction under **Part 2, Accessing The System**.

Receivable Line Inquiry Table (ARLT)

The ARLT is used to view detailed accounting information about all outstanding and closed Billing document and Transportation Billing document lines.

To access the ARLT, at the FFS screen, key in ***N*** at the Action field and ***ARLT*** at the TableID field, then press [Enter]. The ARLT screen (**Figure 8:119**) is displayed with an ***S*** in the Action field.

Displaying A Record. For instructions on displaying a record, see **Part 2, Using Tables**.

The fields on the ARLT are listed below with an explanation of each:

1 **Action.** Displays ***S***.

2 **TableID.** Displays ***ARLT***.

3 **UserID.** Displays the user ID.

4 **Trans Code** 🔑. Displays the transaction code that applies to this receivable.

5 **Document Number** 🔑**.** Displays the document number of the receivable document.

6 **Line No** 🔑. Displays the line number that applies to this receivable line.

7 **BFYS.** Displays the budget fiscal year for the document.

8 **Fund.** Displays the fund for the document.

9 **Trans Type.** Displays the transaction type code for the document.

10 **Bud Org/Sub.** Displays the budget organization/sub organization for the document.

11 **Program.** Displays the program code for the document.

12 **Rev Srce/Sub.** Displays the revenue source/sub revenue for the document.

13 **Job No.** Displays the job number for the document.

14 **Rept Cat.** Displays the reporting category for the document.

15 **BOC/Sub.** Displays the budget object code/sub object for the document.

16 **Cost Org/Sub.** Displays the cost organization/sub organization for the document.

17 **Closed BFYs.** Displays the budget fiscal years of the appropriate canceled appropriation for this receivable line.

18 **Closed Fund.** Displays the fund code of the appropriate canceled appropriation for this receivable line.

19 **Ref Invoice.** Displays the transaction code and document number of the original invoice that was overpaid if this document is for a refund of a previous expenditure.

20 **Ref Line.** Displays the transaction line number of the original invoice that was overpaid if this document is for a refund of a previous expenditure.

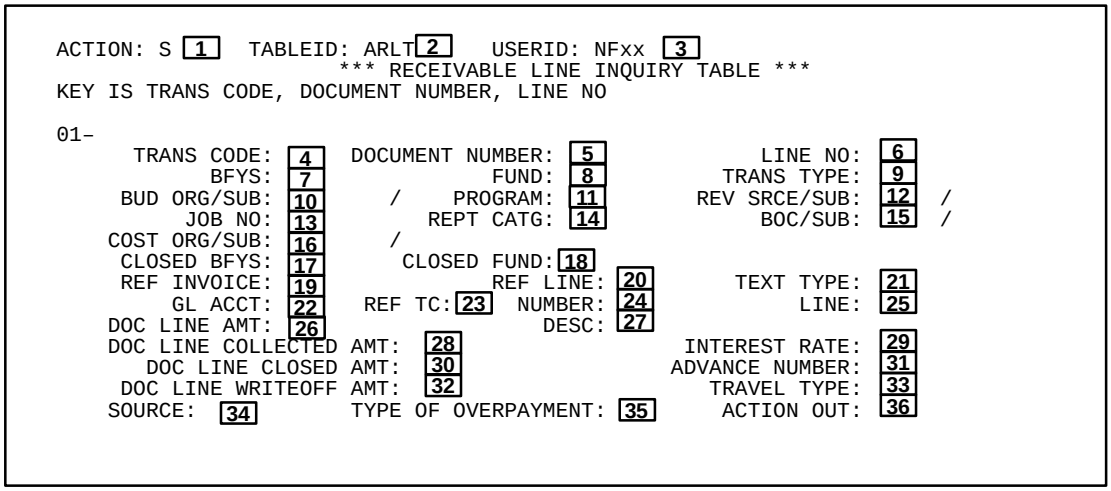

Figure 8:119. Receivable Line Inquiry Table (ARLT)

[21] **Text Type.** Displays the text type entered on the line used to associate standard clauses to the receivable document line for printing on the bill.

[22] **GL Acct.** Displays the General Ledger account number used to override the General Ledger account in ACEN.

[23] **Ref TC.** Displays the transaction code of the referenced document.

[24] **Number.** Displays the document number of the referenced document.

[25] **Line.** Displays the line number of the referenced document.

[26] **Doc Line Amt.** Displays the current amount of this document line which reflects all adjustment actions made on the original amount.

[27] **Desc.** Displays the description entered on the receivable document line.

[28] **Doc Line Collected Amt.** Displays the total amount received on this line (i.e., the total of all cash receipts referencing this receivable).

[29] **Interest Rate.** Displays the interest rate that is applied to the line amount if the receivable is subject to interest. This field is updated by the AROP.

[30] **Doc Line Closed Amt.** Displays the total amount liquidated by Cash Receipts.

[31] **Advance Number.** Displays the advance number for which the travel advance was issued.

[32] **Doc Line Writeoff Amt.** Displays the amount of the line that was written-off. This field is updated by the Write-off batch process.

[33] **Travel Type.** Displays the travel type for which the travel advance was issued.

[34] **Source.** Displays the source of overpayment for this receivable document line.

[35] **Type Of Overpayment.** Displays the type of overpayment for this receivable document line.

[36] **Action Out.** Displays the action out for the receivable document line.

After viewing the data, you have several options, as described below:

- To view another record, repeat the above process.
- To view another table, key in ***N*** at the Action field and the applicable table ID at the TableID field, then press [Enter].
- To access a document screen, key in ***L*** at the Action field and the applicable document transaction code at the TableID field. Use the [Space Bar] to erase the remaining 2 characters, then press [Enter].
- To exit the system, follow the sign-off instruction under **Part 2, Accessing The System**.

Check Block Inquiry Table (CBLK)

The CBLK is used to view:

- The range of checks issued, by fiscal year, month, and batch number for agencies printing their own checks.
- The range of checks that was reported to Treasury for the time period and batch number. It also provides the total amount of the checks within that range.

To access the CBLK, at the FFS screen, key in ***N*** at the Action field and ***CBLK*** at the TableID field, then press [Enter]. The CBLK screen (**Figure 8:120**) is displayed with an ***S*** in the Action field.

Displaying A Record. For instructions on displaying a record, see **Part 2, Using Tables**.

The fields on the CBLK are listed below with an explanation of each:

[1] **Action.** Displays ***S***.

[2] **TableID.** Displays ***CBLK***.

[3] **UserID.** Displays the user ID.

[4] **FY** 🔑. Displays the fiscal year the check issuance was reported to Treasury.

[5] **FM** 🔑. Displays the fiscal month the check issuance was reported to Treasury.

[6] **D.O.** 🔑. Displays the code number of the Treasury disbursing office that issued the checks.

[7] **Check Batch Num** 🔑. Displays the batch number for the check range.

[8] **Beginning Check #**. Displays the first check number in the range.

[9] **Beginning Chk Date.** Displays the date the first check was issued.

[10] **Ending Check #.** Displays the last check number in the range.

[11] **Ending Chk Date.** Displays the date the last check was issued.

[12] **Block Amount.** Displays the total amount of the checks within the range.

[13] **Conf Ind.** Displays ***Y*** to indicate that Treasury has received the tape that reported this check range. This field is updated by direct entry to this table.

After viewing the data, you have several options, as described below:

- To view another record, repeat the above process.
- To view another table, key in ***N*** at the Action field and the applicable table ID at the TableID field, then press [Enter].
- To access a document screen, key in ***L*** at the Action field and the applicable document transaction code at the TableID field. Use the [Space Bar] to erase the remaining 2 characters, then press [Enter].
- To exit the system, follow the sign-off instructions under **Part 2, Accessing The System**.

```
ACTION: S [1]   TABLEID: CBLK [2]   USERID: NFxx [3]
                        *** CHECK BLOCK INQUIRY TABLE ***
KEY IS FY, FM, D.O., CHECK BATCH NUM
              CHECK
              BATCH----BEGINNING---- ----ENDING-------                    CONF
    FY FM D.O. NUM CHECK #  CHK DATE CHECK #  CHK DATE    BLOCK AMOUNT     IND
    -- -- ----- --- -------- -------- -------- -------- ------------------ ---
01- [4] [5] [6] [7]   [8]       [9]      [10]     [11]          [12]         [13]
02-
03-
04-
05-
06-
07-
08-
09-
10-
11-
12-
13-
14-
```

Figure 8:120. Check Block Inquiry Table (CBLK)

Check Header Inquiry Table (CHKH)

The CHKH is used to view information about checks that are generated, such as the check number, payee's name and address, and the amount of the check.

To access the CHKH, at the FFS screen, key in ***N*** at the Action field and ***CHKH*** at the TableID field, then press [Enter]. The CHKH screen (**Figure 8:121**) is displayed with an ***S*** in the Action field.

Displaying A Record. For instructions on displaying a record, see **Part 2, Using Tables**.

The fields on the CHKH are listed below with an explanation of each:

[1] **Action.** Displays ***S***.

[2] **TableID.** Displays ***CHKH***.

[3] **UserID.** Displays the user ID.

Note: Fields [4] through [18] are updated by the Treasury Reconciliation process.

[4] **Check Num** 🔑. Displays the check number.

[5] **D.O.** 🔑. Displays the code number of the Treasury disbursing office that generated the check.

[6] **Fisc Yr.** Displays the fiscal year to which the check belongs

[7] **Offset Indicator** . Displays the offset indicator. This field defaults to ***N***.

[8] **Schd Cat.** Displays the schedule category associated with the schedule on which this check was paid.

[9] **Schd Type.** Displays the schedule type associated with the schedule on which this check was paid.

[10] **Agency Schedule No.** Displays the schedule number for this check. This field is used only if this check was printed by Treasury.

[11] **Payee.** Displays the code number of the person/vendor to whom payment was made.

[12] **Check Date.** Displays the accomplished date if this check was printed by Treasury.

[13] **Canceled Ind.** Displays the indicator describing the cancellation method for a canceled check:

- ***R*** = Replacement
- ***C*** = Reissue
- ***X*** = Deletion

[14] **Amount.** Displays the dollar amount of the check.

[15] **Manual Check Ind.** Displays a blank field.

[16] **Payee Name.** Displays the name of the vendor to whom payment was made.

[17] **Payee Address Line 1.** Displays the first address line of the payee.

[18] **Payee Address Line 2.** Displays the second address line of the payee.

[19] **Payee Address Line 3.** Displays the third address line of the payee.

```
ACTION: S [1]   TABLEID: CHKH [2]   USERID: NFxx [3]
                    *** CHECK HEADER INQUIRY TABLE ***
KEY IS CHECK NUM, D.O.
01-
    CHECK NUM: [4]          D.O.: [5]            OFFSET INDICATOR: [6]
    FISC YR: [7] SCHD CAT: [8]  SCHD TYPE: [9]  AGENCY SCHEDULE NO: [10]
    PAYEE: [11]                 CHECK DATE: [12]       CANCELED IND: [13]
    AMOUNT: [14]                                 MANUAL CHECK IND: [15]
    PAYEE NAME: [16]
    PAYEE ADDRESS LINE 1: [17]
    PAYEE ADDRESS LINE 2: [18]
    PAYEE ADDRESS LINE 3: [19]
02-
    CHECK NUM:              D.O.:
    FISC YR:    SCHD CAT:     SCHD TYPE:       AGENCY SCHEDULE NO:
    PAYEE:                    CHECK DATE:            CANCELED IND:
    AMOUNT:                                      MANUAL CHECK IND:
    PAYEE NAME:
    PAYEE ADDRESS LINE 1:
    PAYEE ADDRESS LINE 2:
    PAYEE ADDRESS LINE 3:
```

Figure 8:121. Check Header Inquiry Table (CHKH)

After viewing the data, you have several options, as described below:

- To view another record, repeat the above process.

- To view another table, key in ***N*** at the Action field and the applicable table ID at the TableID field, then press [Enter].

- To access a document screen, key in ***L*** at the Action field and the applicable document transaction code at the TableID field. Use the [Space Bar] to erase the remaining 2 characters, then press [Enter].

- To exit the system, follow the sign-off instructions under **Part 2, Accessing The System**.

Check Detail Inquiry Table (CHKL)

The CHKL is used to view:

- Voucher information that comprises the dollar total for a check.
- Each voucher used to produce a single check amount.

To access the CHKL, at the FFS screen, key in ***N*** at the Action field and ***CHKL*** at the TableID field, then press [Enter]. The CHKL screen (**Figure 8:122**) is displayed with an ***S*** in the Action field.

Displaying A Record. For instructions on displaying a record, see **Part 2, Using Tables**.

The fields on the CHKL are listed below with an explanation of each:

[1] **Action.** Displays ***S***.

[2] **TableID.** Displays ***CHKL***.

[3] **UserID.** Displays the user ID.

Note: Fields [4] through [13] are updated by the Treasury Reconciliation process.

[4] **Check Number** 🔑. Displays the number assigned to the check.

[5] **Disbursing Office** 🔑. Displays the code number of the Treasury disbursing office that generated the check.

[6] **Check Amount.** Displays the total dollar amount of the check.

[7] **Check Date.** Displays the confirmation date from the TSCH, for Treasury-disbursing agencies.

[8] **Payment Voucher TC** 🔑. Displays the transaction code associated with this payment voucher.

[9] **Payment Voucher Number** 🔑. Displays the unique number assigned to this payment voucher.

[10] **Payment Voucher Adv Numb** 🔑. Displays the number from the Travel Order Document that identifies the advance. Applies to Travel Order transactions only. This is used to reference an accounting distribution.

[11] **Payment Voucher Line** 🔑. Displays the payment voucher line number.

[12] **Rec Typ** 🔑. Displays the record type of the payment voucher line:

P = Payment
C = Credit
D = Discount Taken (Spend)
M = Discount Taken (Memo)
L = Discount Lost (Memo)
I = Interest
P = Penalty

[13] **Amount.** Displays the dollar amount of this payment voucher line.

After viewing the data, you have several options, as described below:

- To view another record, repeat the above process.
- To view another table, key in ***N*** at the Action field and the applicable table ID at the TableID field, then press [Enter].
- To access a document screen, key in ***L*** at the Action field and the applicable document transaction code at the TableID field. Use the [Space Bar] to erase the remaining 2 characters, then press [Enter].
- To exit the system, follow the sign-off instructions under **Part 2, Accessing The System**.

```
ACTION: S [1]  TABLEID: CHKL[2]   USERID: NFxx  [3]
                *** CHECK DETAIL INQUIRY TABLE ***
KEY IS CHECK NUMBER, DISBURSING OFFICE, PAYMENT VOUCHER TC, PAYMENT
       VOUCHER NUMBER, PAYMENT VOUCHER ADV NUMB, PAYMENT VOUCHER LINE, REC TYP

       CHECK NUMBER:  [4]          DISBURSING OFFICE:  [5]
       CHECK AMOUNT:  [6]                CHECK DATE:  [7]

    --------PAYMENT VOUCHER--------  REC
    TC    NUMBER     ADV NUMB  LINE  TYP         AMOUNT
    __  ___________  ________  ____  ___  ___________________
01- [8]     [9]        [10]     [11]  [12]         [13]
02-
03-
04-
05-
06-
07-
08-
09-
10-
```

Figure 8:122. Check Detail Inquiry Table (CHKL)

Cash Receipt Header Inquiry Table (CRHT)

The CRHT is used to view summary information from the cash receipt documents.

To access the CRHT, at the FFS screen, key in ***N*** at the Action field and ***CRHT*** at the TableID field, then press [Enter]. The CRHT screen (**Figure 8:123**) is displayed with an ***S*** in the Action field.

Displaying A Record. For instructions on displaying a record, see **Part 2, Using Tables**.

The fields on the CRHT are listed below with an explanation of each:

[1] **Action.** Displays ***S***.

[2] **TableID.** Displays ***CRHT***.

[3] **UserID.** Displays the user ID.

Note: Fields [4] through [14] are updated by the cash receipt document.

[4] **Trans Code** 🔑. Displays the transaction code that identifies the document as a cash receipt document.

[5] **CR Num** 🔑**.** Displays the document number assigned to the cash receipt document.

[6] **Doc Date.** Displays the date associated with this document.

[7] **Cash Acct.** Displays the account that overrides the default account inferred by the entered transaction type.

[8] **Dep #.** Displays the agency deposit number assigned to this cash receipt document.

[9] **Accmp Date.** Displays the date the cash receipt document was accomplished.

[10] **D.O.** Displays the disbursing office that collected the cash.

[11] **Confirm Date.** Displays the date that Treasury recognized that cash had been collected. This field may also be updated by direct entry into the CRHT.

[12] **Amount.** Displays the total dollar amount (sum of all lines) for this cash receipt document document.

[13] **Billed Fund.** Displays the fund symbol of the billed fund of an interfund document.

[14] **TV Date.** Displays the original date of entry for this document. If the cash receipt document is from a travel advance, the TV date is used.

```
ACTION: S [1]   TABLEID:CRHT [2]   USERID: NFxx [3]
                *** CASH RECEIPT HEADER INQUIRY TABLE ***
KEY IS TRANS CODE,CR NUM
01-
    TRANS CODE:[4] CR NUM:    [5]        DOC DATE:   [6]     CASH ACCT:  [7]
    DEP #:[8]            ACCMP DATE: [9]       D.O.: [10]  CONFIRM DATE:  [11]
    AMOUNT:  [12]                 BILLED FUND: [13]            TV DATE:  [14]
02-
    TRANS CODE:    CR NUM:               DOC DATE:          CASH ACCT:
    DEP #:              ACCMP DATE:          D.O.:       CONFIRM DATE:
    AMOUNT:                   BILLED FUND:                    TV DATE:
03-
    TRANS CODE:    CR NUM:               DOC DATE:          CASH ACCT:
    DEP #:              ACCMP DATE:          D.O.:       CONFIRM DATE:
    AMOUNT:                   BILLED FUND:                    TV DATE:
04-
    TRANS CODE:    CR NUM:               DOC DATE:          CASH ACCT:
    DEP #:              ACCMP DATE:          D.O.:       CONFIRM DATE:
    AMOUNT:                   BILLED FUND:                    TV DATE:
```

Figure 8:123. Cash Receipt Header Inquiry Table (CRHT)

After viewing the data, you have several options, as described below:

- To view another record, repeat the above process.

- To view another table, key in ***N*** at the Action field and the applicable table ID at the TableID field, then press [Enter].

- To access a document screen, key in ***L*** at the Action field and the applicable document transaction code at the TableID field. Use the [Space Bar] to erase the remaining 2 characters, then press [Enter].

- To exit the system, follow the sign-off instructions under **Part 2, Accessing The System**.

Cash Receipts Line Inquiry Table (CRLT)

The CRLT is used to view:

- Detailed information relating to a specific receipt of cash.
- Accounting distribution information, the dollar amount received, and reference information (if applicable) for each receipt in the table.

To access the CRLT, at the FFS screen, key in ***N*** at the Action field and ***CRLT*** at the TableID field, then press [Enter]. The CRLT screen (**Figure 8:124**) is displayed with an ***S*** in the Action field.

Displaying A Record. For instructions on displaying a record, see **Part 2, Using Tables**.

The fields on the CRLT are listed below with an explanation of each:

[1] **Action.** Displays ***S***.

[2] **TableID.** Displays ***CRLT***.

[3] **UserID.** Displays the user ID.

Note: Fields [4] through [31] are updated by the cash receipt document.

[4] **Trans Code** 🔑. Displays the transaction code that applies to the cash receipt document.

[5] **CR Number** 🔑**.** Displays the document number of the cash receipt document.

[6] **Line Number** 🔑. Displays the line number of the document.

[7] **BFYS.** Displays the budget fiscal year for the document.

[8] **Fund.** Displays the fund for the document.

[9] **Budget Org/Sub.** Displays the budget organization/sub organization for the document.

[10] **Trans Type.** Displays the transaction type code for the document

[11] **Travel Type.** Displays a blank field.

[12] **BOC/Sub.** Displays the budget object code/sub object for the document.

[13] **Job Number.** Displays the job number for the document.

[14] **Program.** Displays the program code for the document.

[15] **Rev Src/Sub.** Displays the revenue source/sub revenue for the document.

[16] **GL Account.** Displays the General Ledger account number used to override the General Ledger account in the ACEN.

[17] **Rptg.** Displays the reporting category for the document.

[18] **Cost Org/Sub.** Displays the cost organization/ sub organization for the document.

[19] **Closed BFYS.** Displays the budget fiscal years of the canceled appropriation for this receivable line.

[20] **Closed Fund.** Displays the code of the fund of the canceled appropriation for this receivable line.

```
ACTION: S [1]  TABLEID: CRLT [2]  USERID: NFxx [3]
                *** CASH RECEIPTS LINE INQUIRY TABLE ***
KEY IS TRANS CODE, CR NUMBER, LINE NUMBER
TRANS CODE [4]  CR NUMBER: [5]
01-
    LINE NUMBER: [6]
          BFYS: [7]          FUND: [8]       BUDGET ORG/SUB: [9]      /
     TRANS TYPE: [10]   TRAVEL TYPE: [11]           BOC/SUB: [12]   /
     JOB NUMBER: [13]       PROGRAM: [14]       REV SRC/SUB: [15]   /
     GL ACCOUNT: [16]          RPTG: [17]       COST ORG/SUB: [18]      /
    CLOSED BFYS: [19]   CLOSED FUND:  [20]
     VENDOR/PROVIDER: [21]
         AMOUNT: [22]                          CHECK NUMBER: [23]
         REF TC: [24] REF DOC NUMBER: [25]      LINE NUMBER: [26]  ADV: [27]
     ADVANCE NO: [28]     AGREEMT NO: [29]                ACTION OUT: [30]
    DESCRIPTION: [31]
```

Figure 8:124. Cash Receipts Line Inquiry Table (CRLT)

[21] **Vendor/Provider.** Displays the code of the vendor/provider (or employee) from whom the cash was received.

[22] **Amount.** Displays the dollar amount of the collection.

[23] **Check Number.** Displays the number of the check received.

[24] **Ref TC.** Displays the transaction code of the referenced document.

[25] **Ref Doc Number.** Displays the document number of the referenced document.

[26] **Line Number.** Displays the line number of the referenced document.

[27] **Adv.** Displays ***Y*** if the collection updated the advance amount in the CALT.

[28] **Advance No.** Displays the number that identifies the advance which is being applied or returned by the employee.

[29] **Agreemt No.** Displays the agreement number relates this collection to the appropriate records in the CAHT and the CALT.

[30] **Action Out.** Displays the action out for the cash receipt line.

[31] **Description.** Displays the descriptive information entered on the cash receipt document line.

After viewing the data, you have several options, as described below:

- To view another record, repeat the above process.
- To view another table, key in ***N*** at the Action field and the applicable table ID at the TableID field, then press [Enter].
- To access a document screen, key in ***L*** at the Action field and the applicable document transaction code at the TableID field. Use the [Space Bar] to erase the remaining 2 characters, then press [Enter].
- To exit the system, follow the sign-off instructions under **Part 2, Accessing The System**.

Check Summary Inquiry Table (CSUM)

The CSUM is used to view the total amount of the checks in the range.

To access the CSUM, at the FFS screen, key in ***N*** at the Action field and ***CSUM*** at the TableID field, then press [Enter]. The CSUM screen (**Figure 8:125**) Is displayed with an ***S*** in the Action field.

Displaying A Record. For instructions on displaying a record, see **Part 2, Using Tables**.

The fields on the CSUM are listed below with an explanation of each:

[1] **Action.** Displays ***S***.

[2] **TableID.** Displays ***CSUM***.

[3] **UserID.** Displays the user ID.

Note: Fields [4] through [9] are updated by the Automated Check Printing process:

[4] **Check Date** 🔑. Displays the date the check was issued.

[5] **Disbursing Office** 🔑. Displays the code number of the Treasury disbursing office that issued the check.

[6] **Beginning Check Number** 🔑. Displays the first check number in the range.

[7] **Ending Check Number.** Displays the last check number in the range.

[8] **Amount.** Displays the amount of the checks within the specified range.

[9] **Void Flag.** Displays a ***Y*** if the checks within the range have been voided. Otherwise, this field is blank.

After viewing the data, you have several options, as described below:

- To view another record, repeat the above process.
- To view another table, key in ***N*** at the Action field and the applicable table ID at the TableID field, then press [Enter].
- To access a document screen, key in ***L*** at the Action field and the applicable document transaction code at the TableID field. Use the [Space Bar] to erase the remaining 2 characters, then press [Enter].
- To exit the system, follow the sign-off instructions under **Part 2, Accessing The System**.

```
ACTION: S [1]  TABLEID: CSUM[2]   USERID: NFxx [3]
                    *** CHECK SUMMARY INQUIRY TABLE ***
KEY IS CHECK DATE, DISBURSING OFFICE, BEGINNING CHECK NUMBER

              DISBURSING  BEGINNING      ENDING                      VOID
    CHECK DATE   OFFICE   CHECK NUMBER CHECK NUMBER        AMOUNT     FLAG
    ---------- ---------- ------------ ------------ ------------------ ----
01-      [4]        [5]         [6]          [7]             [8]        [9]
02-
03-
04-
05-
06-
07-
08-
09-
10-
11-
12-
13-
14-
```

Figure 8:125. Check Summary Inquiry Table (CSUM)

Check/EFT Cancellation Inquiry Table (CXLT)

The CXLT is used to view:

- The status of checks and EFT payments canceled using the Check/EFT Cancellation Document .
- A record of Treasury's confirmation of cancellation and the request to backout a previously posted cancellation.

To access the CXLT, at the FFS screen, key in ***N*** at the Action field and ***CXLT*** at the TableID field, then press [Enter]. The CXLT screen (**Figure 8:126**) is displayed with an ***S*** in the Action field.

Displaying A Record. For instructions on displaying a record, see **Part 2, Using Tables**.

The fields on the CXLT are listed below with an explanation of each:

[1] **Action.** Displays ***S***.

[2] **TableID.** Displays ***CXLT***.

[3] **UserID.** Displays the user ID.

[4] **Confirm Indicator** 🔑. Displays the status of the canceled payment:

Y = Confirmed and posted
N = Not confirmed
B = Awaiting Backout

This field is updated by the CX and the Check/EFT Cancellation and Reconciliation process.

[5] **Schd FY** 🔑. Displays the schedule fiscal year if this is an EFT payment. If this is a check payment, this field is blank.

[6] **Schd Cat** 🔑. Displays the schedule category if this is an EFT payment. If this is a check payment, this field is blank.

[7] **Schd Type** 🔑. Displays the schedule type if this is an EFT payment. If this is a check payment, this field is blank.

[8] **Schd No** 🔑. Displays the schedule number if this is an EFT payment. If this is a check payment, this field is blank.

[9] **Chk/Pmt Number** 🔑. Key in the check or payment number of the canceled payment.

[10] **D.O.** 🔑. Displays the disbursing office associated with the canceled payment.

```
ACTION: S [1]  TABLEID: CXLT [2]  USERID: NFxx [3]
                 *** CHECK/EFT CANCELLATION INQUIRY TABLE ***
KEY IS CONFIRM INDICATOR, SCHD FY, SCHD CAT, SCHD TYPE, SCHD NO,
      CHK/PMT NUMBER, D.O.
CONFIRM INDICATOR:[4]
SCHD FY:[5] SCHD CAT:[6] SCHD TYPE:[7] SCHD NO: [8]
                                                          BACK
     CHK/PMT        CANCEL  TR    AGENCY      TREASURY   CONFIRM  OUT REP CANCEL
     NUMBER   D.O. CD  TP  CD   CANCEL #     CANCEL #     DATE   IND IND  IND
     --------  ---- ------  --  ----------  ---------- -------- --- --- ------
01-   [9]     [10] [11][12] [13]   [14]        [15]      [16]   [17][18]  [19]
    VENDOR NAME: [20]                          CHK AMT:  [21]
    ACCT PERIOD: [22]
02-
    VENDOR NAME:                               CHK AMT:
    ACCT PERIOD:
03-
    VENDOR NAME:                               CHK AMT:
    ACCT PERIOD:
```

Figure 8:126. Check/EFT Cancellation Inquiry Table (CXLT)

[11] **Cancel Cd.** Displays the cancellation code of this payment:

- ***R*** = Canceled for replacement
- ***C*** = Reissued
- ***X*** = Deleted

[12] **Cancel Tp.** Displays the cancellation type of this payment:

- ***A*** = The cancellation had a reference reversal amount of zero and was available.
- ***U*** = The cancellation had a reference reversal amount of zero and was unavailable.
- ***Y*** = The cancellation had a reference reversal amount set to the check or payment amount and was available.
- ***N*** = The cancellation had a reference reversal amount set to the check or payment amount and was unavailable.

[13] **Tr Cd.** Displays the transaction code of the cancellation document that recorded the cancellation.

[14] **Agency Cancel #.** Displays the document number of the cancellation document that recorded the cancellation.

[15] **Treasury Cancel #.** Displays the Treasury cancellation number assigned to the confirmation of the canceled check or EFT payment. This field is also updated by direct entry to this table.

[16] **Confirm Date.** Displays the date of the confirmation (*mmddyy*). This field is also updated by direct entry to this table.

[17] **Backout Ind.** Displays ***Y*** if you want a backout of a posted cancellation check. Otherwise, key in ***N***. This field is updated by direct entry to this table.

[18] **Rep Ind.** Displays an indicator of whether or not a canceled check or payment is awaiting replacement by the Automated Disbursements process. This field is updated by the Treasury Reconciliation process.

[19] **Cancel Ind.** Displays an indicator if the original Check Cancellation has been backed out. ***Y*** indicates it has been canceled. ***N*** indicates it has not been canceled.

[20] **Vendor Name.** Displays the name of the vendor to whom the cancellation was issued.

[21] **Chk Amt.** Displays the dollar amount of the cancellation.

[22] **Acct Period.** Displays the accounting period to be posted when the Check Cancellation Reconciliation batch program is run. This field is updated by direct entry to this table.

After viewing the data, you have several options, as described below:

- To view another record, repeat the above process.

- To view another table, key in ***N*** at the Action field and the applicable table ID at the TableID field, then press [Enter].

- To access a document screen, key in ***L*** at the Action field and the applicable document transaction code at the TableID field. Use the [Space Bar] to erase the remaining 2 characters, then press [Enter].

- To exit the system, follow the sign-off instructions under **Part 2, Accessing The System**.

Document Tracking Inquiry Table (DCTI)

The DCTI is used to view information about documents being tracked by FFIS.

To access the DCTI, at the FFS screen, key in ***N*** at the Action field and ***DCTI*** at the TableID field, then press [Enter]. The DCTI screen (**Figure 8:127**) is displayed with an ***S*** in the Action field.

Displaying A Record. For instructions on displaying a record, see **Part 2, Using Tables**.

The fields on the DCTI are listed below with an explanation of each:

[1] **Action.** Displays ***S***.

[2] **TableID.** Displays ***DCTI***.

[3] **UserID.** Displays the user ID.

Note: Fields [4] through [25] are updated by:

- Direct entry to the DCTE.
- FFIS documents with the Doc Track Number flag in the TCAT set to ***Y***.

[4] **Document ID** 🔑. Displays the transaction code and document number associated with this document. This number is used by the system to reference this document tracking record.

[5] **Document Date**. Displays the date of record for the document to be tracked.

[6] **Type.** Displays the type of document.

[7] **Responsibility Code.** Displays the code that identifies the person responsible for this document. The codes are defined in the RESP.

[8] **Name.** Displays the name of the person associated with the responsibility code.

[9] **Div.** Displays the division code derived from the RESP based on the responsibility code.

[10] **Amount.** Displays the amount of this document.

[11] **Document Source.** Displays the source of this document.

[12] **Description.** Displays a description of the tracked document.

[13] **Last Activity Date.** Displays the last date on which any action was taken on this document.

[14] **Status.** Displays the status of the document, e.g.**,** ***Logged***, ***In Process***, ***Canceled***, or ***Processed***.

[15] **Last Line Num.** Displays the line number of the last tracking line added for this document.

[16] **Ln** 🔑. Displays the number for each line from ***001*** to ***999***.

[17] **Tracking Org.** Displays the code for the organization tracking the document. This code is used to limit access to only authorized users. Multiple organizations may track the same document with each organization maintaining security over their individual tracking records. When documents create processed activity lines, they attempt to use the organization code from the document. If no organization code is available, the appropriate default tracking organization is derived from the SOPT.

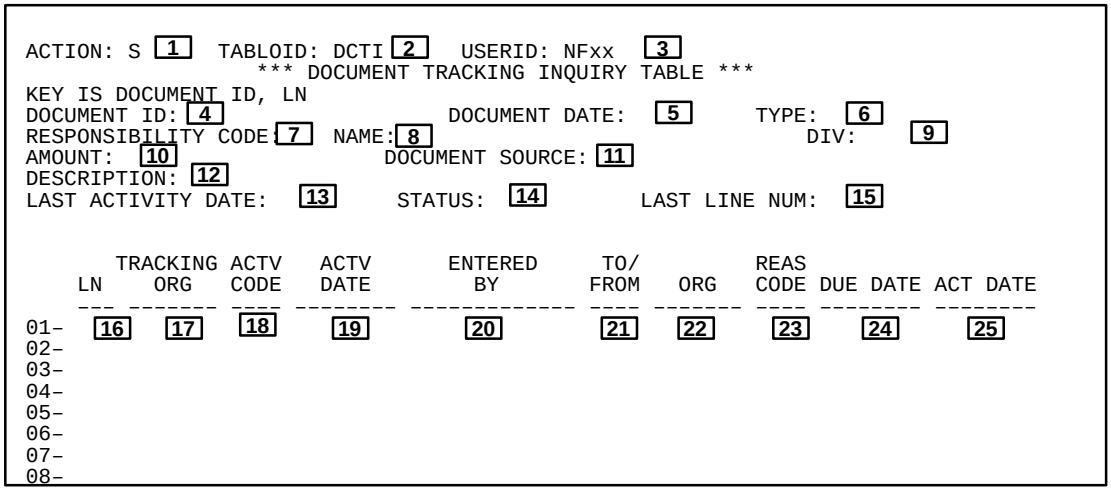

Figure 8:127. Document Tracking Inquiry Table (DCTI)

[18] **Actv Code.** Displays the activity code appropriate for this line.

[19] **Actv Date.** Displays the date associated with the activity line.

[20] **Entered By.** Displays the name of the individual entering this activity line. Note that if this line was created by the system (i.e., activity code is ***PROC***), this field will contain the transaction code and document number of the document creating this line.

[21] **To/From.** Displays the code of the person or group to whom the document is being sent (if this is a ***To*** line) or received from (if this is a ***From*** line).

[22] **Org.** Displays the code of the organization to which the document is being sent (if this is a ***To*** line) or received from (if this is a ***From*** line).

[23] **Reas Code.** Displays the reason code appropriate for this activity line.

[24] **Due Date.** Displays the due date for this activity line.

[25] **Act Date.** Displays the actual date associated with the activity line. This date is used to determine discrepancies between due date and actual date for productivity reporting.

After viewing the data, you have several options, as described below:

- To view another record, repeat the above process.
- To view another table, key in ***N*** at the Action field and the applicable table ID at the Table ID field, then press [Enter].
- To access a document screen, key in ***L*** at the Action field and the applicable document transaction code at the TableID field. Use the [Space Bar] to erase the remaining 2 characters, then press [Enter].
- To exit the system, follow the sign-off instructions under **Part 2, Accessing The System**.

Document Cross Reference Inquiry Table (DXRF)

The DXRF is used to view information about all documents associated with the document entered in the header line if the Use DXRF Table field in the SOPT is **Y**.

To access the DXRF, at the FFS screen, key in ***N*** at the Action field and ***DXRF*** at the TableID field, then press [Enter]. The DXRF screen (**Figure 8:128**) is displayed with an ***S*** in the Action field.

Displaying A Record. For instructions on displaying a record, see **Part 2, Using Tables**.

The fields on the DXRF are listed below with an explanation of each:

[1] **Action.** Displays ***S***.

[2] **TableID.** Displays ***DXRF***.

[3] **UserID.** Displays the user ID.

Note: Fields [4] through [15] are updated by FFIS documents with the Doc Xref Type field in the TCAT set to ***A*** or ***R***.

[4] **Trans Code** 🔑. Displays the 2 digit transaction code that identifies the document.

[5] **Trans Number** 🔑. Displays the number assigned to this document.

[6] **Doc Total**. Displays the current total of the document displayed in the header.

[7] **Outst Amt.** Displays the amount not yet liquidated by documents referencing the document displayed in the header.

[8] **F/B/A** 🔑. Displays a ***F*** (Forward) if this document is referenced by a later document. Displays a ***B*** (Backward) if a reference was made by this document. Displays an ***A*** (As is) if this document did not have a reference.

[9] **Ref Trans ID** 🔑**.** Displays the transaction code and document number that was used as a reference.

[10] **Accept Date** 🔑**.** Displays the date the document was accepted by FFIS.

[11] **Doc Act** 🔑**.** Displays an ***E*** for an original entry. Displays a ***M*** for a modification to an existing document. Displays a ***X*** for a cancellation of an existing document.

[12] **Vendor.** Displays the code for the vendor associated with the document.

[13] **Amount.** Displays the dollar amount of the document submitted.

[14] **Last Batch Number.** Displays the most recent batch number that applies to this document.

[15] **Clearing Action.** Displays an indication of whether or not the document has been cleared from the open tables.

```
ACTION: S [1]   TABLEID: DXRF [2]  USERID: NFxx   [3]
                *** DOCUMENT CROSS REFERENCE INQUIRY TABLE ***
KEY IS TRANS CODE, TRANS NUMBER, F/B/A, REF TRANS ID, ACCEPT DATE, DOC ACTION

TRANS CODE: [4]  TRANS NUMBER:   [5]          DOC TOTAL:   [6]
                                              OUTST AMT:   [7]
                              ACCEPT   DOC
    F/B/A   REF TRANS ID       DATE    ACT     VENDOR          AMOUNT
    -----  ----------------  --------  ---  ------------  ----------------
01- [8]      [9]              [10]     [11]  [12]                [13]
    LAST BATCH NUMBER:[14]     CLEARING ACTION: [15]
02-
    LAST BATCH NUMBER:         CLEARING ACTION:
03-
    LAST BATCH NUMBER:         CLEARING ACTION:
04-
    LAST BATCH NUMBER:         CLEARING ACTION:
05-
    LAST BATCH NUMBER:         CLEARING ACTION:
06-
   LAST BATCH NUMBER:         CLEARING ACTION:
```

Figure 8:128. Document Cross Reference Inquiry Table (DXRF)

After viewing the data, you have several options, as described below:

- To view another record, repeat the above process.

- To view another table, key in ***N*** at the Action field and the applicable table ID at the Table ID field, then press [Enter].

- To access a document screen, key in ***L*** at the Action field and the applicable document transaction code at the TableID field. Use the [Space Bar] to erase the remaining 2 characters, then press [Enter].

- To exit the system, follow the sign-off instructions under **Part 2, Accessing The System**.

EFT Header Inquiry Table (EFTH)

The EFTH is used to view schedule information, EFT payment sequence number, payee's name and address, and the amount of the payment for all processed EFT payments.

To access the EFTH, at the FFS screen, key in ***N*** at the Action field and ***EFTH*** at the TableID field, then press [Enter]. The EFTH screen (**Figure 8:129**) is displayed with an ***S*** in the Action field.

Displaying A Record. For instructions on displaying a record, see **Part 2, Using Tables**.

The fields on the EFTH are listed below with an explanation of each:

1 **Action.** Displays ***S***.

2 **TableID.** Displays ***EFTH***.

3 **UserID.** Displays the user ID.

Note: Fields 4 through 21 are updated by the Treasury Reconciliation process, unless otherwise stated.

4 **FY** 🔑. Displays the fiscal year of the schedule on which this EFT payment was issued.

5 **Schedule Cat** 🔑. Displays the schedule category of the schedule on which this EFT payment was issued.

6 **Schedule Typ** 🔑. Displays the schedule type of the schedule on which this EFT payment was issued.

7 **Schedule No** 🔑. Displays the schedule number of the schedule on which this EFT payment was made.

8 **Seq Num** 🔑. Displays the payment sequence number of the schedule on which this EFT payment was made.

9 **D.O.** 🔑. Displays the code number of the Treasury disbursing office that generated the payment.

10 **Offset Indicator**. Displays the offset indicator. This field defaults to ***N***.

11 **Payee.** Displays the code number of the person/vendor to whom payment was made.

12 **EFT Date.** Displays the accomplished date for the EFT payment.

13 **Canceled Ind.** Displays a description of the cancellation method if this payment was canceled.

14 **Amount.** Displays the dollar amount of the payment.

15 **Payee Name.** Displays the name of the vendor to whom payment was made.

16 **Vendor Bank Name.** Displays the name of the bank through which the EFT payment was issued.

17 **ABA Number.** Displays the ABA or RTN number (including check digit) of the bank through which payment was made.

18 **City/State.** Displays the city and state of the recipient bank.

19 **Account Type.** Displays the type of account to which payment was made (checking or savings).

```
ACTION: S [1]  TABLEID: EFTH[2]   USERID: NFxx [3]
                    *** EFT HEADER INQUIRY TABLE ***
KEY IS FY, SCHEDULE CAT, SCHEDULE TYP, SCHEDULE NO,
       SEQ NUM, D.O.
01-
    FY: [4]  SCHEDULE CAT: [5] SCHEDULE TYP: [6] SCHEDULE NO:   [7]
    SEQ NUM:      [8]              D.O.:    [9]   OFFSET INDICATOR:[10]
    PAYEE:        [11]          EFT DATE:   [12]      CANCELED IND:[13]
    AMOUNT:       [14]
    PAYEE NAME:   [15]

    VENDOR BANK NAME:  [16]                          ABA NUMBER:    [17]
    CITY/STATE:        [18]                        ACCOUNT TYPE:    [19]
    ACCOUNT NUMBER:    [20]

    CORR BANK NAME:    [21]                      CORR ABA NUMB:    [22]
```

Figure 8:129. EFT Header Inquiry Table (EFTH)

[20] **Account Number.** Displays the account number to which the payment was made.

[21] **Corr Bank Name.** Displays the name of the intermediate bank. If the vendor bank does not accept wire transfers, an intermediate (correspondent bank) may be specified to be the intermediate recipient of the payment.

[22] **Corr ABA Numb.** Displays the ABA number (including check digit) of the corresponding bank.

After viewing the data, you have several options, as described below:

- To view another record, repeat the above process.

- To view another table, key in ***N*** at the Action field and the applicable table ID in the TableID field, then press [Enter].

- To access a document screen, key in ***L*** at the Action field and the applicable document transaction code at the TableID field. Use the [Space Bar] to erase the remaining 2 characters, then press [Enter].

- To exit the system, follow the sign-off instructions under **Part 2, Accessing The System**.

EFT Detail Inquiry Table (EFTL)

The EFTL is used to view information about each payment voucher disbursed by EFT that comprises the total dollar amount for a payment.

To access the EFTL, at the FFS screen, key in ***N*** at the Action field and ***EFTL*** at the TableID field, then press [Enter]. The EFTL screen (**Figure 8:130**) is displayed with an ***S*** in the Action field.

Displaying A Record. For instructions on displaying a record, see **Part 2, Using Tables**.

The fields on the EFTL are listed below with an explanation of each:

[1] **Action.** Displays ***S***.

[2] **TableID.** Displays ***EFTL***.

[3] **UserID.** Displays the user ID.

Note: Fields [4] through [17] are updated by the Treasury Reconciliation process.

[4] **FY** 🔑. Displays the fiscal year of the schedule on which this EFT payment was issued.

[5] **Schedule Cat** 🔑. Displays the schedule category of the schedule on which this EFT payment was issued.

[6] **Schedule Type** 🔑. Displays the schedule type of the schedule on which this EFT payment was issued.

[7] **Schedule Number** 🔑. Displays the schedule number of the schedule on which this EFT payment was made.

[8] **EFT Number** 🔑. Displays the payment sequence number of the EFT payment on the schedule on which it was issued.

[9] **Disbursing Office** 🔑. Displays the code number of the Treasury disbursing office that generated the payment.

[10] **EFT Amount.** Displays the total dollar amount of the EFT payment.

[11] **EFT Date.** Displays the date that the EFT payment was generated.

[12] **Payment Voucher TC** 🔑. Displays the transaction code associated with this payment voucher.

[13] **Payment Voucher Number** 🔑. Displays the unique number assigned to this payment voucher.

[14] **Payment Voucher Adv Numb** 🔑. Displays the number from the travel order that identifies the advance. This is used to reference an accounting distribution. Applies to Travel Order transactions only.

[15] **Payment Voucher Line** 🔑. Displays the payment voucher line number.

```
ACTION: S [1]  TABLEID: EFTL [2]  USERID: NFxx  [3]
                      *** EFT DETAIL INQUIRY TABLE ***
KEY IS FY, SCHEDULE CAT, SCHEDULE TYPE, SCHEDULE NUMBER, EFT NUMBER,
   DISBURSING OFFICE, PAYMENT VOUCHER TC, PAYMENT VOUCHER NUMBER, PAYMENT
   VOUCHER ADV NUMB, PAYMENT VOUCHER LINE, REC TYP

FY: [4] SCHEDULE CAT: [5] SCHEDULE TYPE: [6] SCHEDULE NUMBER:   [7]
        EFT NUMBER: [8]                    DISBURSING OFFICE:   [9]
        EFT AMOUNT: [10]                          EFT DATE:   [11]

    --------PAYMENT VOUCHER--------  REC
    TC    NUMBER     ADV NUMB  LINE  TYP         AMOUNT
    --  -----------  --------  ----  ---  --------------------
01- [12]    [13]       [14]    [15]  [16]         [17]
02-
03-
04-
05-
06-
07-
08-
```

Figure 8:130. EFT Detail Inquiry Table (EFTL)

16 **Rec Typ** 🔑. Displays the record type of the payment voucher line:

P = Payment
C = Credit
D = Discount Taken (Spend)
M = Discount Taken (Memo)
L = Discount Lost (Memo)
I = Interest
X = Penalty

17 **Amount.** Displays the dollar amount of this payment voucher line.

After viewing the data, you have several options, as described below:

- To view another record, repeat the above process.
- To view another table, key in ***N*** at the Action field and the applicable table ID in the TableID field, then press [Enter].
- To access a document screen, key in ***L*** at the Action field and the applicable document transaction code at the TableID field. Use the [Space Bar] to erase the remaining 2 characters, then press [Enter].
- To exit the system, follow the sign-off instructions under **Part 2, Accessing The System**.

Replace EFT Inquiry Table (ERPL)

The ERPL is used to view:

- All EFT payments canceled for replacement that have not yet been replaced by the Automated Disbursements process.
- Schedule information, EFT payment number, payee's name, and the amount of the check.

To access the ERPL, at the FFS screen, key in ***N*** at the Action field and ***ERPL*** at the TableID field, then press [Enter]. The ERPL screen (**Figure 8:131**) is displayed with an ***S*** in the Action field.

Displaying A Record. For instructions on displaying a record, see **Part 2, Using Tables**.

The fields on the ERPL are listed below with an explanation of each:

[1] **Action.** Displays ***S***.

[2] **TableID.** Displays ***ERPL***.

[3] **UserID.** Displays the user ID.

Note: Fields [4] through [12] are updated by the CX.

[4] **FY** 🔑. Displays the fiscal year of the schedule on which this EFT payment was issued.

[5] **Schedule Cat** 🔑. Displays the schedule category of the schedule on which this EFT payment was issued.

[6] **Schedule Type** 🔑. Displays the schedule type of the schedule on which this canceled EFT payment was issued.

[7] **Schedule Number** 🔑. Displays the schedule number of the schedule on which this canceled EFT payment was made.

[8] **EFT Number** 🔑. Displays the payment sequence number of the canceled EFT payment on the schedule on which it was issued.

[9] **D.O.** 🔑. Displays the code number of the Treasury disbursing office of the payment canceled for replacement.

[10] **Rej.** Displays ***Y*** to indicate that the payment rejected. Displays ***N*** to indicate that the payment did not reject from disbursements or is ready to be submitted to disbursements. This field identifies those replacement payments that did not complete the disbursements process because of error. This field is also updated by the Schedule Posting process and direct entry to this table.

[11] **Vendor Name.** Displays the payee name for the payment canceled for replacement.

[12] **EFT Amount.** Displays the total dollar amount of the EFT payment canceled for replacement.

```
ACTION: S [1] TABLEID: ERPL [2]   USERID: NFxx [3]
                        *** REPLACE EFT INQUIRY TABLE ***
KEY IS FY, SCHEDULE CAT, SCHEDULE TYPE, SCHEDULE NUMBER,
       EFT NUMBER, D.O.

FY: [4] SCHEDULE CAT: [5] SCHEDULE TYPE: [6] SCHEDULE NUMBER: [7]

      EFT
     NUMBER   D.O.  REJ           VENDOR NAME                EFT AMOUNT
    -------- ----  ---   ------------------------------  -------------------
01-  [8]     [9]   [10]              [11]                       [12]
02-
03-
04-
05-
06-
07-
08-
09-
10-
11-
```

Figure 8:131. Replace EFT Inquiry Table (ERPL)

After viewing the data, you have several options, as described below:

- To view another record, repeat the above process.

- To view another table, key in ***N*** at the Action field and the applicable table ID in the TableID field, then press [Enter].

- To access a document screen, key in ***L*** at the Action field and the applicable document transaction code at the TableID field. Use the [Space Bar] to erase the remaining 2 characters, then press [Enter].

- To exit the system, follow the sign-off instructions under **Part 2, Accessing The System**.

Error Guide Inquiry Table (ERRG)

The ERRG is used to view descriptions of problems and the solution for errors encountered while processing tables and documents.

To access the ERRG, at the FFS screen, key in ***N*** at the Action field and ***ERRG*** at the TableID field, then press [Enter]. The ERRG screen (**Figure 8:132**) is displayed with an ***S*** in the Action field.

Displaying A Record. For instructions on displaying a record, see **Part 2, Using Tables**.

The fields on the ERRG are listed below with an explanation of each:

[1] **Action.** Displays ***S***.

[2] **TableID.** Displays ***ERRG***.

[3] **UserID.** Displays the user ID.

Note: Fields [4] through [7] are updated by an offline table load processes.

[4] **Error Code** 🔑**.** Displays the error message code.

[5] **Error Message.** Displays the message and the error message code.

[6] **Problem**. Displays a description of the problem.

[7] **Solution.** Displays the recommended solution to the problem.

After viewing the data, you have several options, as described below:

- To view another record, repeat the above process.
- To view another table, key in ***N*** at the Action field and the applicable table ID at the Table ID field, then press [Enter].
- To access a document screen, key in ***L*** at the Action field and the applicable document transaction code at the TableID field. Use the [Space Bar] to erase the remaining 2 characters, then press [Enter].
- To exit the system, follow the sign-off instructions under **Part 2, Accessing The System**.

```
ACTION: S [1] TABLEID: ERRG [2]  USERID: NFxx [3]
                  *** ERROR GUIDE INQUIRY TABLE ***
KEY IS ERROR CODE
ERROR CODE: [4]      ERROR MESSAGE: [5]
PROBLEM:    [6]




SOLUTION:   [7]
```

Figure 8:132. Error Guide Inquiry Table (ERRG)

Fiscal Year Allocation Inquiry Table (FALC)

The FALC is used to view information about each budget line's accounting distribution, the budgeted amounts, and the committed, obligated, and the expended amounts by fiscal year.

To access the FALC, at the FFS screen, key in ***N*** at the Action field and ***FALC*** at the TableID field, then press [Enter]. The FALC screen (**Figure 8:133**) is displayed with an ***S*** in the Action field.

Displaying A Record. For instructions on displaying a record, see **Part 2, Using Tables**.

The fields on the FALC are listed below with an explanation of each:

[1] **Action.** Displays ***S***.

[2] **TableID.** Displays ***FALC***.

[3] **UserID.** Displays the user ID.

Note: Fields [4] through [14] are updated by the fiscal budget table create offline batch process.

[4] **Fiscal Year** 🔑. Displays the fiscal year of the allocation.

[5] **Budget FYs**🔑. Displays the budget fiscal years of the allocation.

[6] **Fund** 🔑**.** Displays the fund identifying the allocation.

[7] **Division** 🔑. Displays the division identifying the allocation.

[8] **Org** 🔑. Displays the organization identifying the allocation.

[9] **Pgm** 🔑. Displays the program identifying the allocation.

[10] **BOC** 🔑. Displays the budget object code identifying the allocation.

[11] **Apprv Alloc Amt**. Displays the current approved allocation amount for each quarter.

[12] **Unliq Comm Amt**. Displays the YTD unliquidated commitment amount for each quarter.

[13] **Unliq Oblg Amt**. Displays the YTD unliquidated obligation amount for each quarter.

[14] **Expended Amt**. Displays the YTD expended amount for each quarter.

After viewing the data, you have several options, as described below:

- To view another record, repeat the above process.
- To view another table, key in ***N*** at the Action field and the applicable table ID at the TableID field, then press [Enter].
- To access a document screen, key in ***L*** at the Action field and the applicable document transaction code at the TableID field. Use the [Space Bar] to erase the remaining 2 characters, then press [Enter].
- To exit the system, follow the sign-off instructions under **Part 2, Accessing The System**.

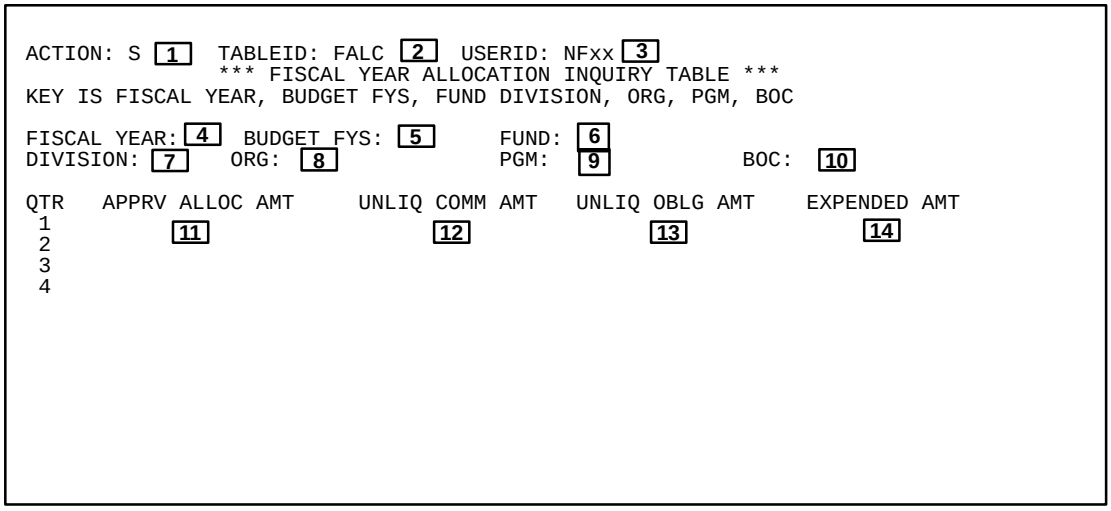

Figure 8:133. Fiscal Year Allocation Inquiry Table (FALC)

Fiscal Year Allotment Inquiry Table (FALT)

The FALT is used to view information about each budget line's accounting distribution, budgeted amounts, and the committed, obligated, and the expended amounts by fiscal year.

To access the FALT, at the FFS screen, key in ***N*** at the Action field and ***FALT*** at the TableID field, then press [Enter]. The FALT screen (**Figure 8:134**) is displayed with an ***S*** in the Action field.

Displaying A Record. For instructions on displaying a record, see **Part 2, Using Tables**.

The fields on the FALT are listed below with an explanation of each:

[1] **Action.** Displays ***S***.

[2] **TableID.** Displays ***FALT***.

[3] **UserID.** Displays the user ID.

Note: Fields [4] through [14] are updated by the fiscal budget table create offline batch process.

[4] **Fiscal Year** 🔑. Displays the fiscal year of the allotment.

[5] **Budget FYs** 🔑. Displays the budget fiscal years of the allotment.

[6] **Fund** 🔑**.** Displays the fund that identifies the allotment.

[7] **Division** 🔑. Displays the division that identifies the allotment.

[8] **Org** 🔑. Displays the organization that identifies the allotment.

[9] **Pgm** 🔑. Displays the program that identifies the allotment.

[10] **BOC** 🔑. Displays the budget object code that identifies the allotment.

[11] **Apprv Allot Amt**. Displays the current approved allotment amount for each quarter.

[12] **Unliq Comm Amt**. Displays the YTD unliquidated commitment amount for each quarter.

[13] **Unliq Oblg Amt**. Displays the YTD unliquidated obligation amount for each quarter.

[14] **Expended Amt**. Displays the YTD expended amount for each quarter.

After viewing the data, you have several options, as described below:

- To view another record, repeat the above process.
- To view another table, key in ***N*** at the Action field and the applicable table ID at the TableID field, then press [Enter].
- To access a document screen, key in ***L*** at the Action field and the applicable document transaction code at the TableID field. Use the [Space Bar] to erase the remaining 2 characters, then press [Enter].
- To exit the system, follow the sign-off instructions under **Part 2, Accessing The System**.

```
ACTION: S [1]  TABLEID: FALT [2]  USERID: NFxx  [3]
               *** FISCAL YEAR ALLOTMENT INQUIRY TABLE ***
KEY IS FISCAL YEAR, BUDGET FYS, FUND DIVISION, ORG, PGM, BOC

FISCAL YEAR: [4]  BUDGET FYS:  [5]     FUND:  [6]
DIVISION: [7]    ORG:  [8]             PGM:   [9]          BOC:  [10]

QTR   APPRV ALLOT AMT      UNLIQ COMM AMT    UNLIQ OBLG AMT     EXPENDED AMT
 1          [11]                [12]              [13]               [14]
 2
 3
 4
```

Figure 8:134. Fiscal Year Allotment Inquiry Table (FALT)

Fiscal Year Appropriation Inquiry Table (FAPP)

The FAPP is used to view:

- Information about the status of an appropriation by fiscal year.
- Appropriation amounts.
- Apportionment, and allocation or allotment totals.
- Commitment, obligation, and expenditure amounts.
- Spending adjustments for expired appropriations.

To access the FAPP, at the FFS screen, key in ***N*** at the Action field and ***FAPP*** at the TableID field, then press [Enter]. The FAPP screen (**Figure 8:135**) is displayed with an ***S*** in the Action field.

Displaying A Record. For instructions on displaying a record, see **Part 2, Using Tables**.

The fields on the FAPP are listed below with an explanation of each:

1 **Action.** Displays ***S***.

2 **TableID.** Displays ***FAPP***.

3 **UserID.** Displays the user ID.

4 **Fiscal Year** 🔑. Displays the fiscal years of the appropriation. This field is updated by the AA.

5 **Budget FYs** 🔑. Displays the budget fiscal years of the appropriation. This field is updated by the AA.

6 **Fund** 🔑. Displays the fund identifying the appropriation. This field is updated by the AA.

7 **Status Ind**. Displays one of the following:

A = Active Appropriation
I = Inactive Appropriation

If this apportionment spending Control option in the FUN2 is full control or presence control, no further spending can be made against this appropriation. This field is updated by the AA.

8 **Est Reim Opt**. Displays the specific reimbursement amount used to calculate the net amount available for the appropriation. This determines the amount used to limit the apportionment YTD budget authority. Valid values are:

N = Do not include reimbursements
E = Include estimated reimbursements
A = Include actual reimbursements
L = Include the lesser of actual and estimated reimbursements.

This field is updated by the AA.

9 **Total Appr Amt**. Displays the total of the approved appropriation amount for the fiscal year. This field is updated by the AA.

10 **Actual Reim Amt**. Displays the total of all reimbursements recorded against the appropriation in the fiscal year. This field is updated by the SV.

11 **CY Apprv Apprv Amt**. Displays the total amount of this appropriation in the current fiscal year. Includes transfers in and transfers out. Does not include reimbursement, lapsed, carryover, or statutory reserve amounts. This field is updated by the AA.

12 **Transfers In**. Displays the total of transfers into the appropriation for the fiscal year. This field is updated by the AA with an Appropriation Indicator of ***T*** in the applicable fiscal year.

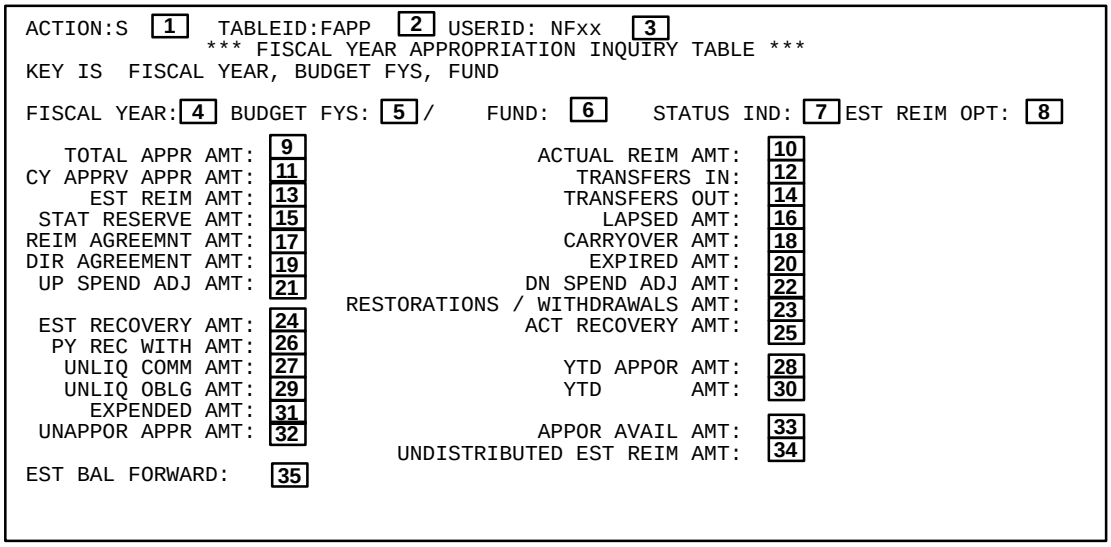

Figure 8:135. Fiscal Year Appropriation Inquiry Table (FAPP)

[13] **Est Reim Amt**. Displays the current estimated reimbursement amount of the fiscal year. This field is updated by the AA.

[14] **Transfers Out**. Displays the total of all transfers out of the appropriation for the fiscal year. This field is updated by the AA with an Appropriation Indicator of ***T*** in the applicable fiscal year.

[15] **Stat Reserve Amt**. Displays the current statutory reserve amount for the fiscal year. This field is updated by the AA.

[16] **Lapsed Amt**. Displays the amount of funds that have lapsed in the fiscal year. This amount is not included in the approved appropriation amount. This field is updated by the FFIS Annual Closing process and the AA with an Appropriation Indicator of ***L***.

[17] **Reim Agreemnt Amt**. Displays the total amount of actual reimbursable agreements accepted compared to the total estimated reimbursement amounts. No edits are based in this field.

[18] **Carryover Amt**. Displays the carryover amount from a prior budget fiscal year. This amount is not included in the approved appropriation amount. This field is updated by the FFIS Annual Closing process.

[19] **Dir Agreement Amt**. Displays the total maximum amount from all records in the FPCA that relate to direct customers. This field is updated by budget fiscal year and the FPCA processor when the direct indicator in the CTYP is ***Y*** for the customer type associated with the FPCA record. If the fiscal year derived from the system date is greater than the beginning budget fiscal year entered in the FPCA record, the fiscal year used is the system date. If the fiscal year derived from the system date is less than or equal to the beginning budget fiscal year of the FPCA record, the beginning fiscal year is used.

[20] **Expired Amt.** Displays the funds expired for the appropriation in the fiscal year. This field is updated by the FFIS Annual Closing process.

[21] **Up Spend Adj Amt**. Displays the amount of upward spending adjustments after the appropriation has expired. This field is updated by spending documents against expired appropriations.

[22] **Dn Spend Adj Amt.** Displays the amount of downward spending adjustments after the appropriation has expired. This field is updated by the spending documents against expired appropriations.

[23] **Restorations/Withdrawals Amt**. Displays the funds restored to the appropriation in the fiscal year. This field is updated by the AA to restore unobligated balances to expired accounts with an Appropriation Indicator of ***R.***

[24] **Est Recovery Amt**. Displays the estimated prior year recovery amount. This field is updated by the AA.

[25] **Act Recovery Amt**. Displays the actual recovery amount from a prior year. This field is updated by spending documents.

[26] **Py Rec With Amt.** Displays the recovery amount identified from a prior year. This field is updated by spending documents.

[27] **Unliq Comm Amt**. Displays the total of all outstanding (open) requisitions against this appropriation in the fiscal year. This field is updated by requisitions, obligations, and payments.

[28] **YTD Appor Amt**. Displays the total amount approved and posted for all four apportionment quarters in the fiscal year. This field is updated by the PA.

[29] **Unliq Oblg Amt**. Displays the total of all outstanding (open) orders against the appropriation in the fiscal year. This field is updated by obligations and payments.

[30] **YTD Amt**. Displays the total of all approved allocations applicable to this appropriation if allocation budget control is in effect. Displays the total of all approved allotments applicable to the appropriation if allotment budget control is in effect, but not allocation budget control. Otherwise, this field is blank. This field is updated by the BE.

[31] **Expended Amt**. Displays the total of all payables and direct disbursements made against this appropriation in the fiscal year. This field is updated by payments, billing/cash receipts for expenditure refunds, and disbursements.

[32] **Unappor Appr Amt**. Displays the amount of this appropriation not yet included in the posting cycle for apportionments. This field is calculated by the FFIS.

[33] **Appor Avail Amt**. Displays the amount available for obligations, commitments, and expenditures against the appropriation. If the SOPT commitment amount spending control option is ***Y,*** the amount is:

YTD Apportionment Amount

Minus prior year recoveries withdrawn

Minus (commitments plus obligations plus expenditures)

Otherwise, commitments are not included in the computation. This field is calculated by the FFIS.

[34] **Undistributed Est Reim Amt**. Displays the estimated reimbursement amounts of the appropriation

that were not distributed. This field is updated by the AA and the BE.

35 **Est Bal Forward**. Displays the amount estimates for the year end available balance for the appropriation. This field is calculated by FFIS.

After viewing the data, you have several options, as described below:

- To view another record, repeat the above process.
- To view another table, key in ***N*** at the Action field and the applicable table ID at the TableID field, then press [Enter].
- To access a document screen, key in ***L*** at the Action field and the applicable document transaction code at the TableID field. Use the [Space Bar] to erase the remaining 2 characters, then press [Enter].
- To exit the system, follow the sign-off instructions under **Part 2, Accessing The System**.

Fiscal Year Apportionment Inquiry Table (FAPR)

The FAPR is used to view:

- Information about the status of an apportionment by fiscal year.
- The total budget authority for the apportionment.
- Pending and approved apportionment amounts by quarter.
- Deferred amounts.
- Quarterly and total commitment, obligation, and expended amounts.

To access the FAPR, at the FFS screen, key in ***N*** at the Action field and ***FAPR*** at the TableID field, then press [Enter]. The FAPR screen (**Figure 8:136**) is displayed with an ***S*** in the Action field.

Displaying A Record. For instructions on displaying a record, see **Part 2, Using Tables**.

The fields on the FAPR are listed below with an explanation of each:

[1] **Action.** Displays ***S***.

[2] **TableID.** Displays ***FAPR***.

[3] **UserID.** Displays the user ID.

Note: Fields [4] through [7] are updated by the AA.

[4] **Fiscal Year** 🔑. Displays the fiscal year of the apportionment.

[5] **Budget Fiscal Years** 🔑. Displays the budget fiscal years of the apportionment.

[6] **Fund** 🔑. Displays the fund that identifies the appropriation.

[7] **Status Ind**. Displays one of the following:

A = Active Appropriation
I = Inactive Appropriation

[8] **Amt Avail For Appor**. Displays the amount available for apportionment in this appropriation. This amount is computed as follows: approved appropriation amount minus statutory reserve amount minus lapsed amount plus carryover amount (if the fund is a no year fund with a carryover indicator of ***Y***) plus estimated or actual reimbursement amount (depending on the estimated reimbursement option) plus restorations/ withdrawal amount. This field is calculated by FFIS.

[9] **YTD Appor Amt**. Displays the total amount approved and posted for all four apportionment quarters. This field is updated by the PA.

[10] **YTD Unliq Comm Amt**. Displays the total of all outstanding (open) requisitions against the appropriation in the fiscal year. This field is updated by requisitions, obligations, and payments.

```
ACTION: S [1] TABLEID: FAPR [2] USERID: NFxx [3]
                *** FISCAL YEAR APPORTIONMENT INQUIRY TABLE ***
    KEY IS FISCAL YEAR, BUDGET FISCAL YEARS, FUND
      FISCAL YEAR: [4] BUDGET FISCAL YEARS: [5] /     FUND: [6]      STATUS IND: [7]
    AMT AVAIL FOR APPOR: [8]                    YTD APPOR AMT: [9]
  YTD UNLIQ COMM AMT: [10]                    YTD       AMT: [11]
  YTD UNLIQ OBLG AMT: [12]
    YTD EXPENDED AMT: [13]                    AVAILABLE AMT: [14]
 PERIOD 1-4 TRANS TYPES - PENDING: [15]  APPROVED: [16]  POSTED: [17]
   DEFERRED TRANS TYPES - PENDING: [18]  APPROVED: [19]  POSTED: [20]

 QTR                      PEND APPOR AMT   APPRV APPOR AMT              AMT
  1                            [21]              [22]                    [23]
  2
  3
  4
 -D-
QTR  UNLIQ COMM AMT      UNLIQ OBLG AMT       EXPENDED AMT                AMT
  1       [24]               [25]                [26]                    [27]
  2
  3
  4
```

Figure 8:136. Fiscal Year Apportionment Inquiry Table (FAPR)

[11] **YTD Amt**. Displays the total of all approved and posted allocations applicable to this appropriation if allocation budget control is in effect. Displays the total of all approved and posted allotments applicable to the appropriation if allotment budget control is in effect, but not allocation budget control. Otherwise, this field is blank. This field is updated by the BE and the RP.

[12] **YTD Unliq Oblg Amt**. Displays the total of all outstanding (open) orders against the appropriation in the fiscal year. This field is updated by obligations and payments.

[13] **YTD Expended Amt**. Displays the total of all payables and direct disbursements made against the appropriation in the fiscal year. This field is updated by payment, billing/cash receipts for expenditure refunds, and disbursements.

[14] **Available Amt**. Displays the amount available for obligations and expenditures against the appropriation. If the SOPT commitment system control option is ***Y***, the amount is: YTD apportionment amount minus commitments plus obligations plus expenditures. Otherwise, commitments are not included in the calculation. This field is calculated by FFIS.

[15] **Period 1-4 Trans Types – Pending**. Displays the type of accounting event used to post to ledgers and journals. This field is updated by the AA and the PA.

[16] **Period 1-4 Trans Types – Approved.** Displays the type of accounting event used to post to ledgers and journals. This field is updated by the AA and the PA.

[17] **Period 1-4 Trans Types – Posted.** Displays the type of accounting event used to post to ledgers and journals. This field is updated by the AA and the PA.

[18] **Deferred Trans Types – Pending.** Displays the type of accounting event used to post to ledgers and journals. This field is updated by the AA and the PA.

[19] **Deferred Trans Types – Approved.** Displays the type of accounting event used to post to ledgers and journals. This field is updated by the AA and the PA.

[20] **Deferred Trans Types – Posted.** Displays the type of accounting event used to post to ledgers and journals. This field is updated by the AA and the PA.

[21] **Pend Appor Amt**. Displays the current amounts awaiting approval for each quarter in the fiscal year. Includes deferred amounts. This field is updated by the AA.

[22] **Apprv Appor Amt**. Displays the approved amounts for each quarter in the fiscal year. Includes deferred amounts. This amount may or may not be posted. This field is updated by the AA.

[23] **Amt**. Displays the sum of all allocation or allotment amounts for this fiscal year by quarter. If the allocation budget control option in the FUN2 is set to ***Y***, this is the allocation amounts. If allocations are not used (allocation budget control option in the FUN2 is set to ***N***). If allotments are used (allotment budget control option in the FUN2 is set to ***Y*** for allotments), this is the allotment amounts. Otherwise, this field is blank. This field is updated by the BE.

[24] **Unliq Comm Amt**. Displays the YTD unliquidated commitment amount by quarter in the current fiscal year. This field is updated by the documents given above for each amount field.

[25] **Unliq Oblig Amt.** Displays the YTD unliquidated obligation amount by quarter in the current fiscal year. This field is updated by the documents given above for each amount field.

[26] **Expended Amt.** Displays the YTD expended amount by quarter in the current fiscal year. This field is updated by the documents given above for each amount field.

[27] **Amt**. Displays the amount of the apportionment available for allocation or allotment in this fiscal year. This amount is: approved apportionment amount minus allocation or allotment amount. This field is calculated by FFIS.

After viewing the data, you have several options, as described below:

- To view another record, repeat the above process.
- To view another table, key in ***N*** at the Action field and the applicable table ID at the TableID field, then press [Enter].
- To access a document screen, key in ***L*** at the Action field and the applicable document transaction code at the TableID field. Use the [Space Bar] to erase the remaining 2 characters, then press [Enter].
- To exit the system, follow the sign-off instructions under **Part 2, Accessing The System**.

Fund Summary Group Appropriation Table (FSAP)

The FSAP is used to view :

- Summarized accounting information for each fund summary group
- Available appropriated and apportioned amounts for current and prior budget fiscal year(s) for each fund summary group

To access the FSAP, at the FFS screen, key in ***N*** at the Action field and ***FSAP*** at the TableID field, then press [Enter]. The FSAP screen (**Figure 8:137**) is displayed with an ***S*** in the Action field.

Note: This table is updated when entries are added, changed, or deleted from the APPR, FSUM, or calculated by FFIS.

Displaying A Record. For instructions on displaying a record, see **Part 2, Using Tables**.

The fields on the FSAP are listed below with an explanation of each:

[1] **Action.** Displays ***S***.

[2] **TableID.** Displays ***FSAP***.

[3] **UserID.** Displays the user ID.

[4] **Fund Summary Group** 🔑. Displays the name for the fund summary group defined on the FSUM. This field is updated by the FSUM.

[5] **Budg Auth Amt (Current BFY)**. Displays the budget authority amount for the current budget fiscal year. This amount is calculated as follows for each fund summary group: approved appropriation – statutory reserves – lapsed amount + estimated or actual reimbursements + greater of estimated or actual recoveries – carryover. This field is calculated by FFIS.

[6] **Budg Auth Amt (Prior BFY)**. Displays the budget authority amount for the prior budget fiscal year. This amount is calculated as follows for each fund summary group: approved appropriation – statutory reserves – lapsed amount + estimated or actual reimbursements + greater of estimated or actual recoveries – carryover. This field is calculated by FFIS.

[7] **Budg Auth Amt (Cumulative)**. Displays the cumulative budget authority amount. This amount is calculated as follows for each fund summary group: approved appropriation – statutory reserves – lapsed amount + estimated or actual reimbursements + greater of estimated or actual recoveries – carryover. This field is calculated by FFIS.

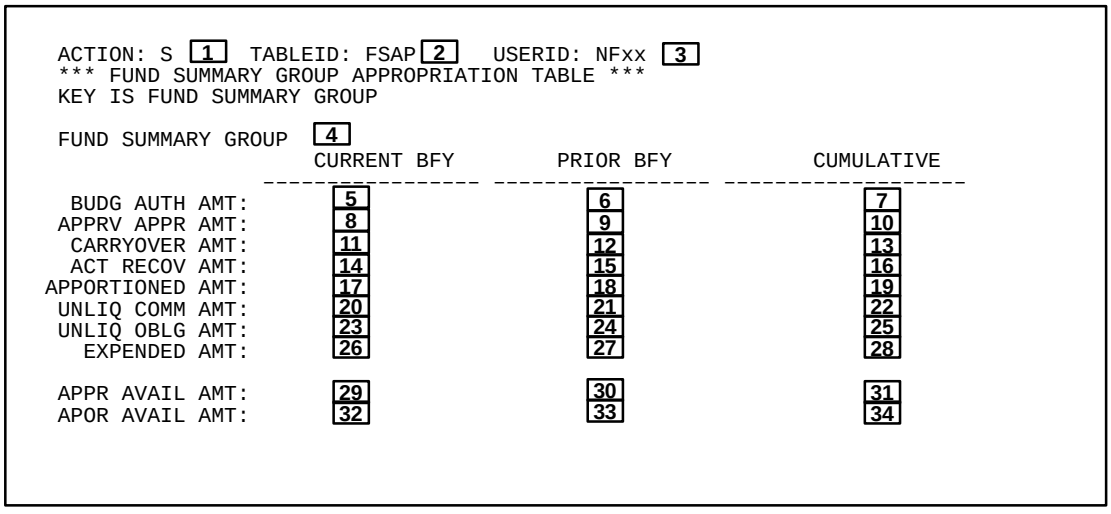

Figure 8:137. Fund Summary Group Appropriation Table (FSAP)

Note: Fields [8] through [34] are updated by the APPR.

[8] **Apprv Appr Amt** (**Current BFY**). Displays the approved appropriation amount for the current budget fiscal year.

[9] **Apprv Appr Amt** (**Prior BFY**). Displays the approved appropriation amount for the prior budget fiscal year.

[10] **Apprv Appr Amt** (**Cumulative**). Displays the cumulative approved appropriation amount.

[11] **Carryover Amt** (**Current BFY**). Displays the current budget fiscal year unobligated amount carried forward to new budget fiscal year.

[12] **Carryover Amt** (**Prior BFY**). Displays the prior budget fiscal year unobligated amount carried forward to new budget fiscal year.

[13] **Carryover Amt** (**Cumulative**). Displays the cumulative unobligated amount carried forward to new budget fiscal year.

[14] **Act Recov Amt** (**Current BFY**). Displays the amount recovered in the current budget fiscal year because of prior year obligation adjustments.

[15] **Act Recov Amt** (**Prior BFY**). Displays the amount recovered in the prior budget fiscal year because of prior year obligation adjustments.

[16] **Act Recov Amt** (**Cumulative**). Displays the cumulative amount recovered in the budget fiscal year because of prior year obligation adjustments.

[17] **Apportioned Amt** (**Current BFY**). Displays the current budget fiscal year posted apportionment amount. This amount is the basis for the available balance calculation.

[18] **Apportioned Amt** (**Prior BFY**). Displays the prior budget fiscal year posted apportionment amount. This amount is the basis for the available balance calculation.

[19] **Apportioned Amt** (**Cumulative**). Displays the cumulative posted apportionment amount. This amount is the basis for the available balance calculation.

[20] **Unliq Comm Amt** (**Current BFY**). Displays the current budget fiscal year total of all outstanding requisitions against this fund summary group.

[21] **Unliq Comm Amt** (**Prior BFY**). Displays the prior budget fiscal year total of all outstanding requisitions against this fund summary group.

[22] **Unliq Comm Amt** (**Cumulative**). Displays the cumulative total of all outstanding requisitions against this fund summary group.

[23] **Unliq Oblg Amt** (**Current BFY**). Displays the current budget fiscal year total of all outstanding obligations against this fund summary group.

[24] **Unliq Oblg Amt** (**Prior BFY**). Displays the prior budget fiscal year total of all outstanding obligations against this fund summary group.

[25] **Unliq Oblg Amt** (**Cumulative**). Displays the cumulative total of all outstanding obligations against this fund summary group.

[26] **Expended Amt** (**Current BFY**)**.** Displays the current budget fiscal year total of all payables and direct disbursements against this fund summary group.

[27] **Expended Amt** (**Prior BFY**). Displays the prior budget fiscal year total of all payables and direct disbursements against this fund summary group.

[28] **Expended Amt** (**Cumulative**). Displays the cumulative total of all payables and direct disbursements against this fund summary group.

[29] **Appr Avail Amt** (**Current BFY**). Displays the current budget fiscal year available appropriation amount for the fund summary group. This amount is computed as follows: approved appropriation amount – statutory reserves – lapsed amount + estimated or actual reimbursement amount + carryover amount + actual recover amount = prior year recovery withdrawal amount + amounts spend (commitments _ obligations + expenditures). If the SOPT is set to ***Y***, commitments are included in the calculation. Otherwise, commitments are not included in the calculation.

[30] **Appr Avail Amt** (**Prior BFY**). Displays the prior budget fiscal year available appropriation amount for the fund summary group. This amount is computed as follows: approved appropriation amount – statutory reserves – lapsed amount + estimated or actual reimbursement amount + carryover amount + actual recover amount = prior year recovery withdrawal amount + amounts spend (commitments _ obligations + expenditures). If the SOPT is set to ***Y***, commitments are included in the calculation. Otherwise, commitments are not included in the calculation.

[31] **Appr Avail Amt** (**Cumulative**). Displays the cumulative available appropriation amount for the fund summary group. This amount is computed as follows: approved appropriation amount – statutory reserves – lapsed amount + estimated or actual reimbursement amount + carryover amount + actual recover amount

= prior year recovery withdrawal amount + amounts spend (commitments _ obligations + expenditures). If the SOPT is set to ***Y***, commitments are included in the calculation. Otherwise, commitments are not included in the calculation.

32 **Apor Avail Amt** (**Current BFY**). Displays the current budget fiscal year amount available for apportionment for the fund summary group. This amount is computed as follows: year-to-date posted apportionment amount – year-to-date unliquidated commitment – year-to-date unliquidated obligations – year-to-date expenditures – year-to-date prior year recoveries withdrawals. If the SOPT is set to ***Y***, commitments are included in the calculation. Otherwise, commitments are not included in the calculation.

33 **Apor Avail Amt** (**Prior BFY**). Displays the prior budget fiscal year amount available for apportionment for the fund summary group. This amount is computed as follows: year-to-date posted apportionment amount – year-to-date unliquidated commitment – year-to-date unliquidated obligations – year-to-date expenditures – year-to-date prior year recoveries withdrawals. If the SOPT is set to ***Y***, commitments are included in the calculation. Otherwise, commitments are not included in the calculation.

34 **Apor Avail Amt** (**Cumulative**). Displays the cumulative amount available for apportionment for the fund summary group. This amount is computed as follows: year-to-date posted apportionment amount – year-to-date unliquidated commitment – year-to-date unliquidated obligations – year-to-date expenditures – year-to-date prior year recoveries withdrawals. If the SOPT is set to ***Y***, commitments are included in the calculation. Otherwise, commitments are not included in the calculation.

After viewing the data, you have several options, as described below:

- To view another record, repeat the above process.

- To view another table, key in ***N*** at the Action field and the applicable table ID at the TableID field, then press [Enter].

- To access a document screen, key in ***L*** at the Action field and the applicable document transaction code at the TableID field. Use the [Space Bar] to erase the remaining 2 characters, then press [Enter].

- To exit the system, follow the sign-off instructions under **Part 2, Accessing The System**.

Fund Summary Group Available Balance Table (FSAV)

The FSAV is used to view information about the available balance for each fund summary group.

To access the FSAV, at the FFS screen, key in ***N*** at the Action field and ***FSAV*** at the TableID field, then press [Enter]. The FSAV screen (**Figure 8:138**) is displayed with an ***S*** in the Action field.

Note: This table is updated when entries are added, changed, or deleted from the FSUM or calculated by the FFIS.

Displaying A Record. For instructions on displaying a record, see **Part 2, Using Tables**.

The fields on the FSAV are listed below with an explanation of each:

[1] **Action.** Displays ***S***.

[2] **TableID.** Displays ***FSAV***.

[3] **UserID.** Displays the user ID.

[4] **Fund Summary Group** 🔑. Displays the name for the fund summary group defined on the FSUM. This field is updated by the FSUM.

Note: Fields [5] through [10] are calculated by the FFIS.

[5] **Total Appr Avail Amt.** Displays the total appropriation available balance for all BFY/Funds in the fund summary group.

[6] **Total Apprv Avail Amt**. Displays the total apportionment available balance for all BFY/Funds in the fund summary group.

[7] **BFYs** 🔑. Displays the beginning/ending budget fiscal years for appropriations corresponding to the particular fund summary group.

[8] **Fund** 🔑. Displays the funds for appropriations corresponding to the particular fund summary group.

[9] **Appr Avail Balance**. Displays the available appropriation balance for BFY/Fund.

[10] **Apor Avail Balance**. Displays the available apportionment balance for BFY/Fund.

After viewing the data, you have several options, as described below:

- To view another record, repeat the above process.
- To view another table, key in ***N*** at the Action field and the applicable table ID at the TableID field, then press [Enter].
- To access a document screen, key in ***L*** at the Action field and the applicable document transaction code at the TableID field. Use the [Space Bar] to erase the remaining 2 characters, then press [Enter].
- To exit the system, follow the sign-off instructions under **Part 2, Accessing The System**.

```
ACTION: S [1]  TABLEID: FSAV [2]   USERID: NFxx [3]
*** FUND SUMMARY GROUP AVAIL BALANCE TABLE ***
KEY IS FUND SUMMARY GROUP, BFYS, FUND

FUND SUMMARY GROUP:    [4]
TOTAL APPR AVAIL AMT:  [5]
TOTAL APOR AVAIL AMT:  [6]

    BFYS     FUND      APPR AVAIL BALANCE     APOR AVAIL BALANCE
   -- --    -----     -------------------    -------------------
01- [7]      [8]            [9]                    [10]
02-           :
03-           :
04-           :
05-           :
06-           :
07-           :
08-           :
09-           :
10-           :
11-           :
12-           :
```

Figure 8:138. Fund Summary Group Available Balance Table (FSAV)

Fund Summary Group General Ledger Balance Inquiry Table (FSGL)

The FSGL is used to view accounting information for each fiscal year and fund summary group combination by general ledger account.

To access the FSGL, at the FFS screen, key in ***N*** at the Action field and ***FSGL*** at the TableID field, then press [Enter]. The FSGL screen (**Figure 8:139**) is displayed with an ***S*** in the Action field.

Displaying A Record. For instructions on displaying a record, see Part 2, Using Tables.

The fields on the FSGL are listed below with an explanation of each:

[1] **Action.** Displays ***S***.

[2] **TableID.** Displays ***FSGL***.

[3] **UserID.** Displays the user ID.

Note: Fields [4] through [10] are updated by the FFIS.

[4] **Fiscal Year** 🔑. Displays the fiscal year for which the account balance was affected.

[5] **Fund Summary Group** 🔑. Displays the name for the fund summary group defined in the FSUM.

[6] **GL Acct** 🔑**.** Displays the general ledger account number.

[7] **Beginning Balance**. Displays the total of the beginning balances for the fiscal year, fund summary group, and general ledger account.

[8] **Debit Balance**. Displays the total of the debit entries for the fiscal year, fund summary group, and general ledger account.

[9] **Credit Balance**. Displays the total of the credit entries for the fiscal year, fund summary group, and general ledger account.

[10] **Net Balance**. Displays the total of the ending balances for the fiscal year, fund summary group, and general ledger account.

After viewing the data, you have several options, as described below:

- To view another record, repeat the above process.
- To view another table, key in ***N*** at the Action field and the applicable table ID at the TableID field, then press [Enter].
- To access a document screen, key in ***L*** at the Action field and the applicable document transaction code at the TableID field. Use the [Space Bar] to erase the remaining 2 characters, then press [Enter].
- To exit the system, follow the sign-off instructions under Part 2, Accessing The System.

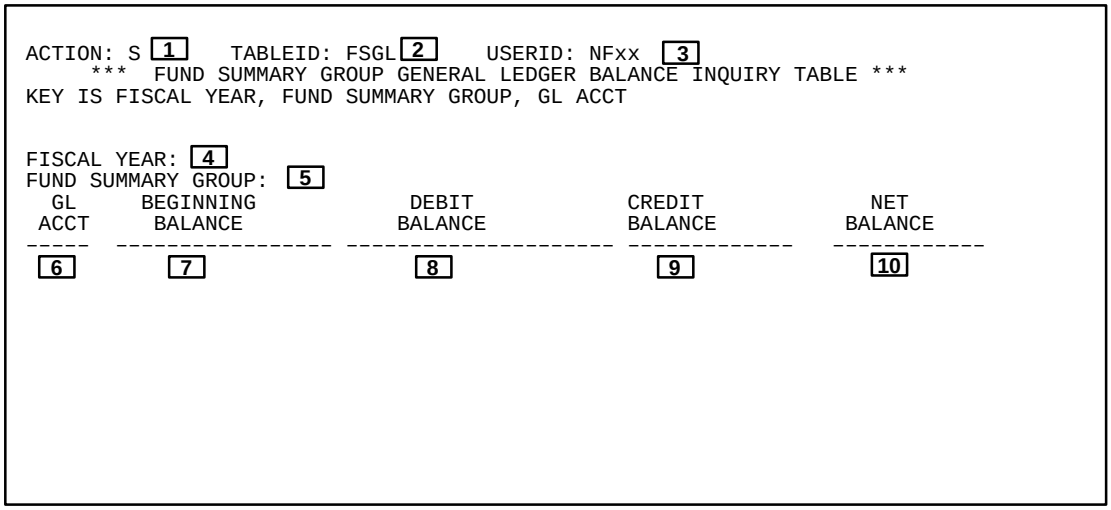

Figure 8:139. Fund Summary Group General Ledger Balance Inquiry Table (FSGL)

General Ledger Balance Inquiry Table (GLBL)

The GLBL is used to view General Ledger account balances. These balances reflect all posted transactions affecting GL accounts within the accounting fiscal year.

This table is updated online when FFIS accepts and posts accounting transactions to the general journal if the G/L Balance Control Account option in the SOPT is set to ***Y***. If the option is ***O***, the table is updated offline by the Runsplit job (XXXGLRS). If the option is ***N***, the table is not updated.

To access the GLBL, at the FFS screen, key in ***N*** in the Action field and ***GLBL*** at the TableID field, then press [Enter]. The GLBL screen (**Figure 8:140**) is displayed with an ***S*** in the Action field.

Displaying A Record. For instructions on displaying a record, see **Part 2, Using Tables**.

The fields on the GLBL are listed below with an explanation of each:

[1] **Action.** Displays ***S***.

[2] **TableID.** Displays ***GLBL***.

[3] **UserID.** Displays the user ID.

[4] **Fiscal Year** 🔑**.** Displays the accounting fiscal year. This field is updated by all transactions that post the general journal as specified in the ACEN.

[5] **BFYs** 🔑**.** Displays the budget fiscal years. This field is updated by all transactions that post the general journal as specified in the ACEN.

[6] **Fund** 🔑**.** Displays the fund code. This field is updated by all transactions that post the general journal as specified in the ACEN.

[7] **Treasury Symbol.** Displays the Treasury appropriation symbol. This field is inferred from the FUND.

[8] **GL Acct** 🔑**.** Displays the General Ledger account number. This field is updated by all transactions that post the general journal as specified in the ACEN.

[9] **Beginning Balance.** Displays the balance in the account at the beginning of the accounting fiscal year. This field is updated by the FFIS Annual Closing process or Transaction posting to accounting period ***00***.

[10] **Debit Balance.** Displays the sum of all (if any) debits to this GL account. This field is updated by all transactions that post the general journal as specified in the ACEN.

[11] **Credit Balance.** Displays the sum of all (if any) credits to this GL account. This field is updated by all transactions that post the general journal as specified in the ACEN.

[12] **Net Balance.** Displays the net balance in the GL account, incorporating the beginning balance with the debit and credit balances. This field is calculated by FFIS (beginning balance plus debits plus credits).

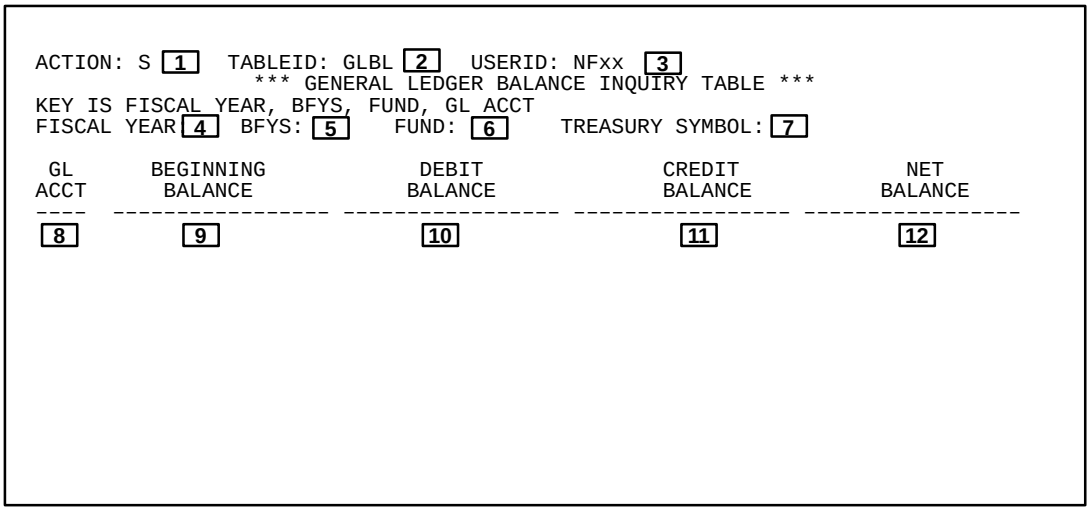

Figure 8:140. General Ledger Balance Inquiry Table (GLBL)

After viewing the data, you have several options, as described below:

- To view another record, repeat the above process.

- To view another table, key in ***N*** at the Action field and the applicable table ID in the Table ID field, then press [Enter].

- To access a document screen, key in ***L*** at the Action field and the applicable document transaction code at the TableID field. Use the [Space Bar] to erase the remaining 2 characters, then press [Enter].

- To exit the system, follow the sign-off instructions under **Part 2, Accessing The System**.

General Ledger Detail Balance Inquiry Table (GLDB)

The GLDB is used to view General Ledger account balances at the fiscal year, fund, GL account, division, organization, cost organization, program, budget object code or revenue source, account type, transaction ID, transaction date, fiscal month, and reference document ID levels.

This table is updated online when FFIS accepts and posts accounting transactions to the general journal if the G/L Balance Control Detail Acct Option in the SOPT is set to ***Y***. If the option is set to ***O***, the table is updated offline by the Runsplit job (XXXGLRS). If the option is ***N***, the table is not updated.

To access the GLDB, at the FFS screen, key in ***N*** at the Action field and ***GLDB*** at the TableID field, then press [Enter]. The GLDB table screen (**Figure 8:141**) is displayed with an ***S*** in the Action field.

Displaying A Record. For instructions on displaying a record, see Part 2, Using Tables.

The fields on the GLDB are listed below with an explanation of each:

1 **Action.** Displays ***S***.

2 **TableID.** Displays ***GLDB***.

3 **UserID.** Displays the user ID.

Note: Fields 4 through 21 are updated by all transactions that post the general journal as specified in the ACEN.

4 **FY.** Displays the fiscal year code entered on the accepted FFIS document that posted the accounting entry.

5 **BFYs.** Displays the budget fiscal year(s) codes entered on the accepted FFIS document that posted the accounting entry.

6 **Fund.** Displays the fund code entered on the accepted FFIS document that posted the accounting entry.

7 **GL Acct.** Displays the general ledger account code entered on the accepted FFIS document that posted the accounting entry.

8 **Div.** Displays the division code entered on the accepted FFIS document that posted the accounting entry.

9 **Org.** Displays the organization code entered on the accepted FFIS document that posted the accounting entry.

10 **Cost Org.** Displays the cost organization code entered on the accepted FFIS document that posted the accounting entry.

11 **Program.** Displays the program code entered on the accepted FFIS document that posted the accounting entry.

12 **BOC/Rev.** Displays the BOC revenue code entered on the accepted FFIS document that posted the accounting entry.

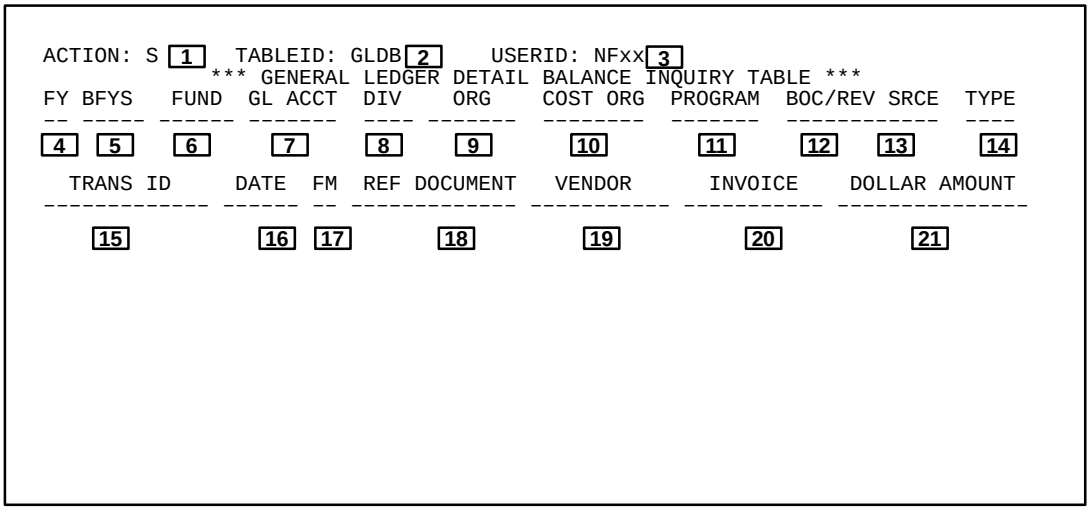

Figure 8:141. General Ledger Detail Balance Inquiry Table (GLDB)

[13] **BOC/Srce.** Displays the BOC source code entered on the accepted FFIS document that posted the accounting entry.

[14] **Type.** Displays the type code entered on the accepted FFIS document that posted the accounting entry.

[15] **Trans ID.** Displays the transaction ID code entered on the accepted FFIS document that posted the accounting entry.

[16] **Date.** Displays the date entered on the accepted FFIS document that posted the accounting entry.

[17] **FM.** Displays the fiscal month entered on the accepted FFIS document that posted the accounting entry.

[18] **Ref Document.** Displays the reference document number entered on the accepted FFIS document that posted the accounting entry.

[19] **Vendor.** Displays the vendor code entered on the accepted FFIS document that posted the accounting entry.

[20] **Invoice.** Displays the invoice number entered on the accepted FFIS document that posted the accounting entry.

[21] **Dollar Amount.** Displays the sum of all the lines on the document posted to the accounting distribution.

After viewing the data, you have several options, as described below:

- To view another record, repeat the above process.

- To view another table, key in ***N*** at the Action field and the applicable table ID in the Table ID field, then press [Enter].

- To access a document screen, key in ***L*** at the Action field and the applicable document transaction code at the TableID field. Use the [Space Bar] to erase the remaining 2 characters, then press [Enter].

- To exit the system, follow the sign-off instructions under **Part 2, Accessing The System**.

Generic Schedule Control Header Inquiry Table (GSCH)

The GSCH is used to store the control total for GVTS invoice payments.

Note: This table is updated when a new GVTS Payment Voucher (G1) document is processed in FFIS and when GVTS Travel Invoice (G2) documents corresponding to transactions on a GVTS invoice are accepted.

To access the GSCH, at the FFS screen, key in ***N*** at the Action field and ***GSCH*** at the TableID field, then press [Enter]. The GSCH table screen (**Figure 8:142**) is displayed with an ***S*** in the Action field.

Displaying A Record. For instructions on displaying a record, see **Part 2, Using Tables**.

The fields on the GSCH are listed below with an explanation of each:

1 **Action.** Displays ***S***.

2 **TableID.** Displays ***GSCH***.

3 **UserID.** Displays the user ID.

4 **Agency Code** 🔑**.** Displays the agency code which is derived from the GVTS invoice.

5 **Feeder ID** 🔑**.** Displays the feeder ID.

6 **Control ID** 🔑**.** Displays the control ID which the first 10 positions are derived from the last 10 positions of the GVTS Invoice Number and the last position, if a supplemental invoice, is an asterisk or alpha character.

7 **Control Total.** Displays the dollar amount total of the invoice from the 420-character record.

8 **Acc/Del Total.** Displays the total dollar amount of all G2 documents which correspond to a particular invoice that have the Status flag set to ***A*** or ***D*** on the corresponding GSCL record. This field is updated by the UNAL FFIS interface Program 2 (ITFUNA2).

After viewing the data, you have several options, as described below:

- To view another record, repeat the above process.
- To view another table, key in ***N*** at the Action field and the applicable table ID in the Table ID field, then press [Enter].
- To access a document screen, key in ***L*** at the Action field and the applicable document transaction code at the TableID field. Use the [Space Bar] to erase the remaining 2 characters, then press [Enter].
- To exit the system, follow the sign-off instructions under **Part 2, Accessing The System**.

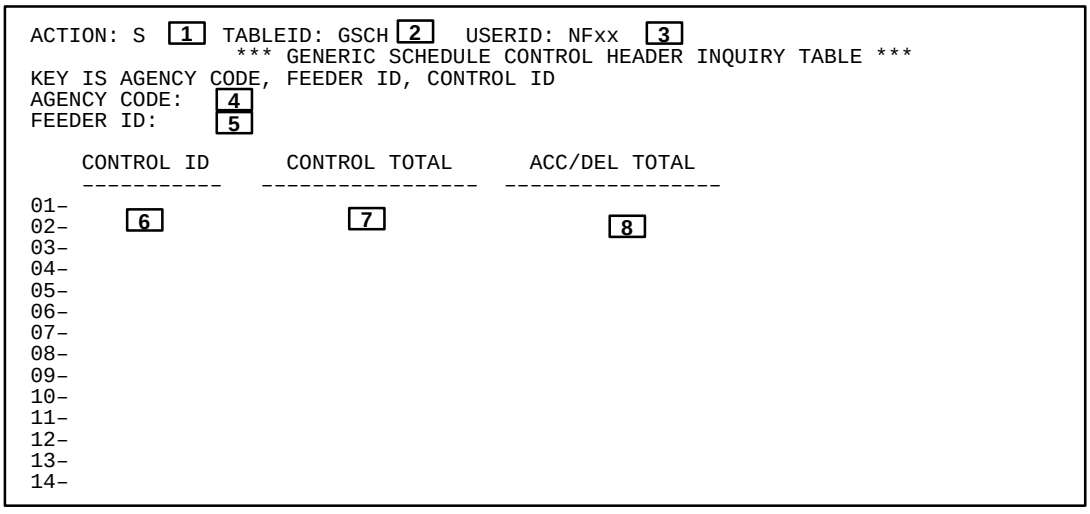

Figure 8:142. Generic Schedule Control Header Inquiry Table (GSCH)

Generic Schedule Control Line Inquiry Table (GSCL)

The GSCL is used to indicate which G2 documents corresponding to transactions on a GVTS invoice have been accepted into FFIS.

Note: This table is updated when the GVTS-FFIS Payment Control Program (ITFGVT2) runs to determine the status of each G2 document.

To access the GSCL, at the FFS screen, key in ***N*** at the Action field and ***GSCL*** at the TableID field, then press [Enter]. The GSCL table screen (**Figure 8:143**) is displayed with an ***S*** in the Action field.

Displaying A Record. For instructions on displaying a record, see **Part 2, Using Tables**.

The fields on the GSCL are listed below with an explanation of each:

[1] **Action.** Displays ***S***.

[2] **TableID.** Displays ***GSCL***.

[3] **UserID.** Displays the user ID.

[4] **Agency Code** 🔑**.** Displays the agency code on the invoice transaction.

[5] **Feeder ID** 🔑**.** Displays the feeder ID.

[6] **Control ID** 🔑**.** Displays the control ID which the first 10 positions are derived from the last 10 positions of the GVTS Invoice Number and the last position, if a supplemental invoice, is an asterisk or alpha character.

[7] **TC** 🔑**.** Displays the transaction code which is derived from GLXT.

[8] **Document ID** 🔑**.** Displays the document identification which is the Trans-number field on the G2 document header.

[9] **Amount.** Displays the document total field on the G2 document.

[10] **Status.** Displays one of the following status indicators:

- ***A*** = Accepted
- ***L*** = Loaded by not ye accepted
- ***D*** = Deleted

Note: Initially this field is set to ***L*** and updated to ***A*** by ITFGVT2 after IVLT is updated with the G2 document. Users may change ***L*** to ***D*** when a document is deleted from SUSF. Users may change ***D*** to ***L*** to undelete a document.

[11] **Date.** Displays the status date.

[12] **Vendor Code.** Displays the vendor code.

[13] **D.O.** Displays the disbursing office.

[14] **Misc.** Displays the miscellaneous code.

```
ACTION: S [1] TABLEID: GSCL[2]   USERID: NFxx  [3]
                *** GENERIC SCHEDULE CONTROL LINE INQUIRY TABLE ***
KEY IS AGENCY CODE, FEEDER ID, CONTROL ID, TC, DOCUMENT ID
AGENCY CODE :   [4]
  FEEDER ID :   [5]
 CONTROL ID :   [6]

   TC DOCUMENT ID      AMOUNT          STATUS/DATE    VENDOR CODE D.O.   MISC
    -- ----------- ----------------- --------------- ------------ ---- --------
01- [7]    [8]       [9]              [10]  /[11]/       [12]        [13]    [14]
02-                                     /    /
03-                                     /    /
04-                                     /    /
05-                                     /    /
06-                                     /    /
07-                                     /    /
08-                                     /    /
09-                                     /    /
10-                                     /    /
11-                                     /    /
12-                                     /    /
13-                                     /    /
```

Figure 8:143. Generic Schedule Control Line Inquiry Table (GSCL)

After viewing the data, you have several options, as described below:

- To view another record, repeat the above process.
- To view another table, key in ***N*** at the Action field and the applicable table ID in the Table ID field, then press [Enter].
- To access a document screen, key in ***L*** at the Action field and the applicable document transaction code at the TableID field. Use the [Space Bar] to erase the remaining 2 characters, then press [Enter].
- To exit the system, follow the sign-off instructions under **Part 2, Accessing The System**.

Invoice – Payment Voucher – Check/EFT Cross-Ref Inquiry Table (IVCH)

The IVCH is used to view:

- Information that links the vendor invoice to the voucher lines, and the associated check or payment number.
- The vendor invoice amount and date, the voucher amount and date, and the check or payment number and date.

To access the IVCH, at the FFS screen, key in ***N*** at the Action field and ***IVCH*** at the TableID field, then press [Enter]. The IVCH screen (**Figure 8:144**) is displayed with an ***S*** in the Action field.

Displaying A Record. For instructions on displaying a record, see **Part 2, Using Tables**.

The fields on the IVCH are listed below with an explanation of each:

[1] **Action.** Displays ***S***.

[2] **TableID.** Displays ***IVCH***.

[3] **UserID.** Displays the user ID.

Note: Fields [4] through [17] are updated by the Automated Check Posting process and the Treasury Reconciliation process.

[4] **Vendor Code** 🔑. Displays the vendor code for the invoice.

[5] **Invoice Number** 🔑. Displays the number of the invoice.

[6] **Invoice Date** 🔑. Displays the date of the invoice.

Note: Fields [7] through [10] and [16] through [17] display voucher data. Fields [11] through [15] and [18] through [19] display schedule data.

[7] **TC** 🔑. Displays the transaction code of the voucher.

[8] **Number** 🔑. Displays the document number of the voucher.

[9] **Travel Adv Numb** 🔑. Displays the number from the Travel Order document that identifies the advance. This is used to reference an accounting distribution. Applies to Travel Order transactions only.

[10] **Ln** 🔑**.** Displays the line number of the voucher.

[11] **Disb Offc** 🔑**.** Displays the code number of the Treasury disbursing office that issued the check.

[12] **Fisc Yr** 🔑**.** Displays the schedule fiscal year associated with this EFT payment. If this IVCH record is for a check payment, this field is blank.

[13] **Schd Cat** 🔑. Displays the schedule category associated with this EFT payment. If this IVCH record is for a check payment, this field is blank.

[14] **Schd Typ** 🔑. Displays the schedule type associated with this EFT payment. If this IVCH record is for a check payment, this field is blank.

[15] **Schd Number** 🔑. Displays the schedule number associated with this EFT payment. If this IVCH record is for a check payment, this field is blank.

```
ACTION: S[1] TABLEID: IVCH[2]  USERID: NFxx [3]
     *** INVOICE – PAYMENT VOUCHER –  CHECK/EFT CROSS–REF INQUIRY TABLE ***
KEY IS VENDOR CODE, INVOICE NUMBER, INVOICE DATE, TC, NUMBER,
     TRAVEL ADV NUMB, LN, DIS OFFC, FISC YR, SCHD CAT, SCHD TYPE,
     SCHD NUMBER, NUMBER

VENDOR CODE: [4]          INVOICE NUMBER: [5]         INVOICE DATE: [6]

          VOUCHER DATA                    SCHEDULE DATA
    ---------------------------   ---------------------------------
                    TRAVEL        DISB  FISC  SCHD  SCHD    SCHD
    TC   NUMBER    ADV NUMB LN    OFFC   YR   CAT   TYP    NUMBER
    -- ----------- -------- ---   ----  ----  ----  ----  ---------
01-[7]      [8]        [9]  [10]   [11]   [12]   [13]   [14]    [15]
     NUMBER:     [16]    DATE:     [17]    CAN IND:[18] AMT PD:[19]
02-
     NUMBER:           DATE:          CAN IND:   AMT PD:
03-
     NUMBER:           DATE:          CAN IND:   AMT PD:
04-
     NUMBER:           DATE:          CAN IND:   AMT PD:
```

Figure 8:144. Invoice-Payment Voucher–Check/EFT Cross-Ref Inquiry Table (IVCH)

16 **Number** 🔑**.** Displays the check number or EFT payment sequence number.

17 **Date.** Displays the date the check was printed or EFT payment was processed.

18 **Can Ind.** Displays one of the following codes:

Y	=	If this check was canceled
X	=	If this check was canceled and deleted
R	=	If this check was canceled and replaced

Otherwise, this field is blank.

19 **Amt Pd.** Displays the total check line amount.

After viewing the data, you have several options, as described below:

- To view another record, repeat the above process.
- To view another table, key in ***N*** at the Action field and the applicable table ID at the TableID field, then press [Enter].
- To access a document screen, key in ***L*** at the Action field and the applicable document transaction code at the TableID field. Use the [Space Bar] to erase the remaining 2 characters, then press [Enter].
- To exit the system, follow the sign-off instructions under **Part 2, Accessing The System**.

Internal Voucher Inquiry Table (IVLT)

The IVLT is used to view:

- Summary information about IVs.
- Information about the buyer's and seller's accounting distributions.

To access the IVLT, at the FFS screen, key in ***N*** at the Action field and ***IVLT*** at the TableID field, then press [Enter]. The IVLT screen (**Figure 8:145**) is displayed with an ***S*** in the Action field.

Displaying A Record. For instructions on displaying a record, see **Part 2, Using Tables**.

The fields on the IVLT are listed below with an explanation of each:

[1] **Action.** Displays ***S***.

[2] **TableID.** Displays ***IVLT***.

[3] **UserID.** Displays the user ID.

Note: Fields [4] through [17] are updated by the IV lines, unless otherwise stated.

[4] **Trans Code** 🔑**.** Displays the code that identifies this document as an IV.

[5] **Doc Number** 🔑. Displays the document number assigned to this payment.

[6] **Line** 🔑. Displays the number of the accounting line in the IV.

[7] **Customer Num.** Displays the customer number that applies to this voucher.

[8] **Agreement Number.** Displays the agreement number that applies to this voucher.

[9] **Customer Name.** Displays the customer's name.

[10] **Accept Date.** Displays the date this transaction was accepted by the system.

[11] **Amount.** Displays the amount of this voucher line.

[12] **Quantity.** Displays the number of units entered in this voucher line.

[13] **Indirect Cost Transfer Flag.** Displays one of the following codes:

E	=	Indicates that this line is a transfer of indirect costs supported by expenditure burden.
O	=	Indicates that this line is a transfer of costs supported by obligation burden.
N	=	Indicates neither expenditure nor obligation burden.

Note: Fields [14] through [30] are associated with the seller in the transaction.

[14] **Budget FYs.** Displays the seller's accounting distribution associated with the budget fiscal year(s).

[15] **Fund.** Displays the seller's accounting distribution associated with the fund code.

[16] **Budget Org.** Displays the seller's accounting distribution associated with the budget organization code.

[17] **Sub** (**Budget Org**)**.** Displays the seller's accounting distribution associated with the suborganization code.

```
ACTION: S[1] TABLEID: IVLT[2] USERID: NFxx [3]
                  *** INTERNAL VOUCHER INQUIRY TABLE ***
KEY IS TRANS CODE, DOC NUMBER, LINE

01-   TRANS CODE: [4]    DOC NUMBER: [5]            LINE: [6]
    CUSTOMER NUM: [7]                  AGREEMENT NUMBER: [8]
   CUSTOMER NAME: [9]                       ACCEPT DATE: [10]
          AMOUNT: [11]                        QUANTITY: [12]
      INDIRECT COST TRANSFER FLAG: [13]
                              *** SELLER ***
     BUDGET FYS: [14]          FUND: [15]    BUDGET ORG/SUB: [16]  / [17]
   COST ORG/SUB: [18]  / [19]  PGM: [20]           BOC/SUB: [21] / [22]
       REPT CAT: [23]          JOB: [24]     REV SRCE/SUB: [25] / [26]
    CLOSED BFYS: [27]  CLOSED FUND: [28]       TRANS TYPE: [29]
           DESC: [30]
                           *** BUYER ***
      CADT LINE: [31]
     BUDGET FYS: [32]          FUND: [33]    BUDGET ORG/SUB: [34]  / [35]
   COST ORG/SUB: [36]  / [37]  PGM: [38]           BOC/SUB: [39] / [40]
       REPT CAT: [41]          JOB: [42]          REF DOC: [43]
    CLOSED BFYS: [44]  CLOSED FUND: [45]       TRANS TYPE: [46]
DESC: [47]
```

Figure 8:145. Internal Voucher Inquiry Table (IVLT)

18 **Cost Org.** Displays the seller's accounting distribution associated with the cost organization code.

19 **Sub** (**Cost Org**)**.** Displays the seller's accounting distribution associated with the cost suborganization code.

20 **Pgm.** Displays the seller's accounting distribution associated with the program code.

21 **BOC.** Displays the seller's accounting distribution associated with the budget object class code.

22 **Sub** (**BOC**)**.** Displays the seller's accounting distribution associated with the subobject class code.

23 **Rept Cat**. Displays the seller's accounting distribution associated with the report category.

24 **Job**. Displays the seller's accounting distribution associated with the job number.

25 **Rev Srce**. Displays the seller's accounting distribution associated with the revenue source.

26 **Sub** (**Rev Srce**)**.** Displays the seller's accounting distribution associated with the sub revenue source.

27 **Closed BFYs.** Displays the budget fiscal year(s) of the canceled appropriation referenced by this document.

28 **Closed Fund.** Displays the fund code of the canceled appropriation referenced by this document.

29 **Trans Type.** Displays the transaction type that describes the general ledger postings for the seller of this line.

30 **Desc.** Displays the line description entered in this line or defaulted from the CALT.

Note: Fields 31 through 47 are associated with the buyer in the transaction.

31 **Cadt Line.** Displays the line number of the CADT being referenced.

32 **Budget FYs.** Displays the buyer's accounting distribution associated with the budget fiscal year(s).

33 **Fund.** Displays the buyer's accounting distribution associated with the fund code.

34 **Budget Org.** Displays the buyer's accounting distribution associated with the budget organization code.

35 **Sub** (**Budget Org**)**.** Displays the buyer's accounting distribution associated with the suborganization code.

36 **Cost Org.** Displays the buyer's accounting distribution associated with the cost organization code.

37 **Sub** (**Cost Org**)**.** Displays the buyer's accounting distribution associated with the cost suborganization code.

38 **Pgm.** Displays the buyer's accounting distribution associated with the program code.

39 **BOC.** Displays the buyer's accounting distribution associated with the budget object class code.

40 **Sub** (**BOC**)**.** Displays the buyer's accounting distribution associated with the subobject class code.

41 **Rept Cat**. Displays the buyer's accounting distribution associated with the report category.

42 **Job**. Displays the buyer's accounting distribution associated with the job number.

43 **Ref Doc**. Displays the transaction code, document number, and line of a prior document recording a commitment, an obligation, or a receipt.

44 **Closed BFYs.** Displays the budget fiscal year(s) of the canceled appropriation referenced by this document.

45 **Closed Fund.** Displays the fund code of the canceled appropriation referenced by this document.

46 **Trans Type.** Displays the transaction type that describes the general ledger postings for the buyer for this line.

47 **Desc.** Displays the line description entered in this line.

After viewing the data, you have several options, as described below:

- To view another record, repeat the above process.
- To view another table, key in ***N*** at the Action field and the applicable table ID at the TableID field, then press [Enter].
- To access a document screen, key in ***L*** at the Action field and the applicable document transaction code at the TableID field. Use the [Space Bar] to erase the remaining 2 characters, then press [Enter].
- To exit the system, follow the sign-off instructions under **Part 2, Accessing The System**.

Journal Voucher And Standard Journal Inquiry Table (JVLT)

The JVLT is used to view journal voucher and standard journal line information.

To access the JVLT, at the FFS screen, key in ***N*** at the Action field and ***JVLT*** at the TableID field, then press [Enter]. The JVLT screen (**Figure 8:146**) is displayed with an ***S*** in the Action field.

Displaying A Record. For instructions on displaying a record, see **Part 2, Using Tables**.

The fields on JVLT are listed below with an explanation of each:

[1] **Action.** Displays ***S***.

[2] **TableID.** Displays ***JVLT***.

[3] **UserID.** Displays the user ID.

Note: Fields [4] through [44] are updated by the SV

[4] **Trans Code/Number** 🔑**.** Displays the transaction code and document number that identifies this record.

[5] **Line** 🔑**.** Displays the line number of the document.

[6] **Acctg Period.** Displays the accounting period of the document.

[7] **Trans Type.** Displays the transaction type that describes the General Ledger postings for this line.

[8] **Acct Type.** Displays the account type for the General Ledger account on this line.

[9] **BFYs.** Displays the budget fiscal years that applies to this document.

[10] **Fund.** Displays the fund code that applies to the accounting distribution for this line.

[11] **Div.** Displays the division code that applies to the accounting distribution for this line.

[12] **GL Acct.** Displays the general ledger account code that applies to the accounting distribution for this line.

[13] **Budget Org/Sub.** Displays the budget suborganization code that applies to the accounting distribution for this line.

[14] **Cost Org/Sub.** Displays the cost suborganization code that applies to the accounting distribution for this line.

[15] **Program.** Displays the program code that applies to the accounting distribution for this line.

[16] **BOC/Rev.** Displays the BOC revenue code that applies to the accounting distribution for this line.

[17] **Source/Sub.** Displays the sub revenue source code that apply to the accounting distribution for this line.

[18] **Exp/Rev/GL/Bud.** Displays the expenditure, revenue, and general ledger budget codes that apply to the accounting distribution for this line.

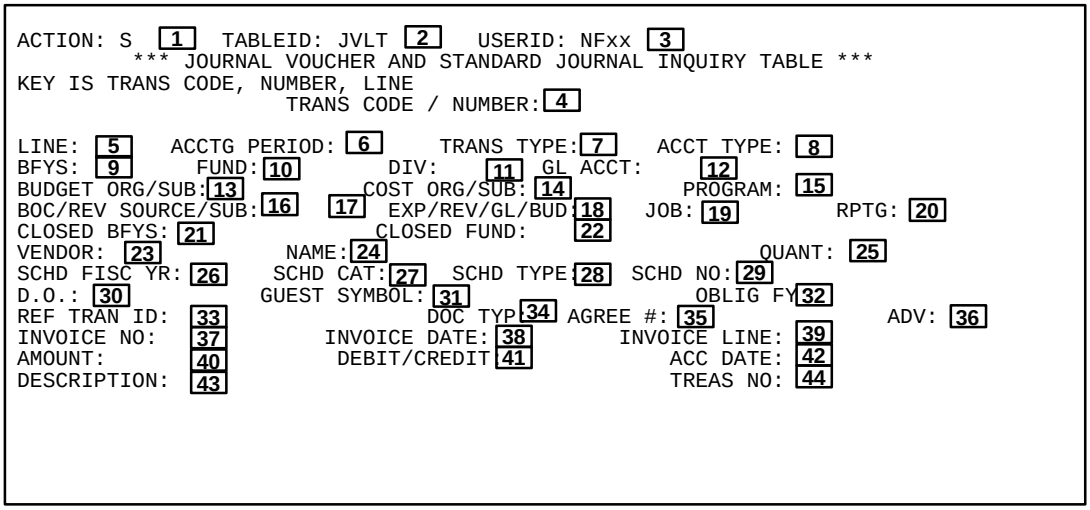

Figure 8:146. Journal Voucher And Standard Journal Inquiry Table (JVLT)

[19] **Job.** Displays the job code that apply to the accounting distribution for this line.

[20] **Rptg.** Displays the reporting code that apply to the accounting distribution for this line.

[21] **Closed BFYs.** Displays the budget fiscal years of the canceled appropriation referenced by this line.

[22] **Closed Fund.** Displays the fund code of the cancelled appropriation referenced by this line.

[23] **Vendor.** Displays the vendor code that applies to this line.

[24] **Name.** Displays the vendor's name.

[25] **Quant.** Displays the number of units entered on this line.

[26] **Schd Fisc Yr.** Displays the fiscal year associated with this payment line.

[27] **Schd Cat.** Displays one of the following payment methods used for disbursement of this payment.

T = Automated Tape Schedule
M = Manual SF-1166
A = ACH Tape
S = TFCS SF-1166

[28] **Schd Type.** Displays the voucher schedule type entered on this line.

[29] **Schd No.** Displays the schedule number entered on this line.

[30] **D.O.** Displays the disbursing office code.

[31] **Guest Symbol.** Displays the other fund's Treasury symbol for transactions that affect inter-agency transfers.

[32] **Oblig FY.** Displays the fiscal year of the obligation that was affected by this line.

[33] **Ref Tran ID.** Displays the referenced transaction's code number.

[34] **Doc Typ.** Displays the referenced transaction's code document type.

[35] **Agree #.** Displays the agreement number entered to force the voucher to use the CTYP to determine the accounting event ***or*** reference the CAOT (when the Project Cost Option in the SOPT is ***Y)***.

[36] **Adv.** Displays the advance flag entered on this line. Valid values are:

N = Non-Advance
A = Advance
U = Advance Used

[37] **Invoice No.** Displays the invoice number of the vendor's invoice.

[38] **Invoice Date.** Displays the invoice date.

[39] **Invoice Line.** Displays the invoice line number.

[40] **Amount.** Displays the dollar amount of this invoice line.

[41] **Debit/Credit.** Displays ***D*** to indicate that this line is a debit transaction or ***C*** to indicate that this line is a credit transaction.

[42] **Acc Date.** Displays the accomplished date for this line.

[43] **Description.** Displays the line description entered on this line or defaults from the voucher header.

[44] **Treas No.** Displays the Treasury document number (e.g., pre-printed SF-1167 number) for this transaction.

After viewing the data, you have several options, as described below:

- To view another record, repeat the above process.
- To view another table, key in ***N*** at the Action field and the applicable table ID at the Table ID field, then press [Enter].
- To access a document screen, key in ***L*** at the Action field and the applicable document transaction code at the Table ID field. Use the [Space Bar] to erase the remaining 2 characters, then press [Enter].
- To exit the system, follow the sign-off instructions under **Part 2, Accessing The System**.

Monthly Summary General Ledger Balance Inquiry Table (MSGL)

The MSGL is used to view General Ledger account balances at the fiscal year, fund, GL account, division, organization, program, budget object code or revenue source, reporting category, and fiscal month level.

To access the MSGL, at the FFS screen, key in ***N*** at the Action field and ***MSGL*** at the TableID field, then press [Enter]. The MSGL screen (**Figure 8:147**) is displayed with an ***S*** in the Action field.

This table is updated online when FFIS accepts and posts accounting transactions to the general journal only if the G/L Balance Control Monthly Sum Account field in the SOPT is set to ***Y***. If the field is set to ***O***, the table is updated offline by the Runsplit job (XXGLRS). If the option is ***N***, the table is not updated.

Displaying A Record. For instructions on displaying a record, see **Part 2, Using Tables**.

The fields on the MSGL are listed below with an explanation of each:

[1] **Action.** Displays ***S***.

[2] **TableID.** Displays ***MSGL***.

[3] **UserID.** Displays the user ID.

Note: Fields [4] through [15] are updated from all transactions that post the general journal with the complete key.

[4] **FY.** Displays the fiscal year code entered in the accepted FFIS document that posted the accounting entry.

[5] **Fund.** Displays the fund code entered in the accepted FFIS document that posted the accounting entry.

[6] **BFYs.** Displays the budget fiscal year(s) entered in the accepted FFIS document that posted the accounting entry.

[7] **GL Acct.** Displays the general ledger account code entered in the accepted FFIS document that posted the accounting entry.

[8] **Div.** Displays the division code entered in the accepted FFIS document that posted the accounting entry.

[9] **Org.** Displays the organization code entered in the accepted FFIS document that posted the accounting entry.

[10] **Program.** Displays the program code entered in the accepted FFIS document that posted the accounting entry.

[11] **BOC/Rev.** Displays the BOC revenue code entered in the accepted FFIS document that posted the accounting entry.

[12] **Srce.** Displays the source code entered in the accepted FFIS document that posted the accounting entry.

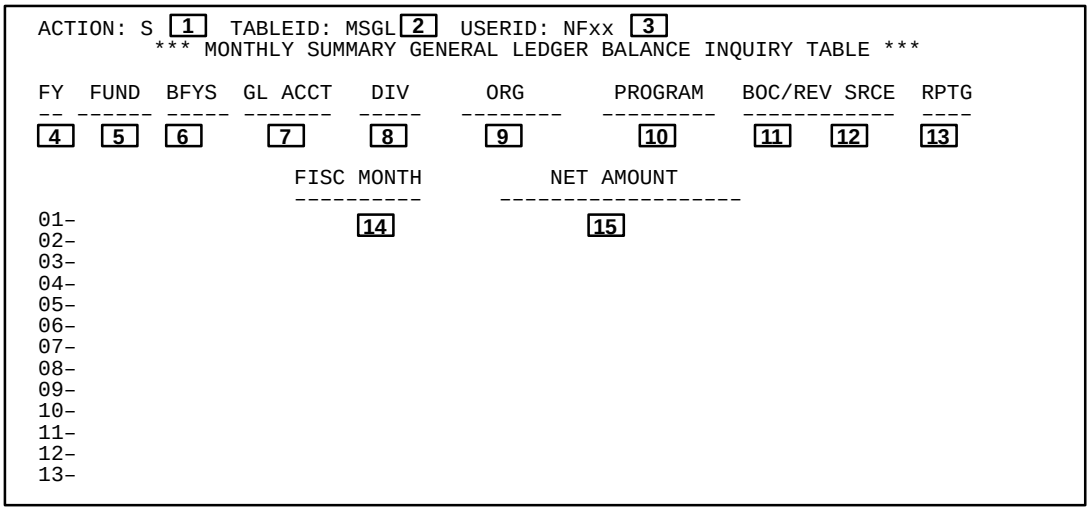

Figure 8:147. Monthly Summary General Ledger Balance Inquiry Table (MSGL)

13 **Rptg.** Displays the reporting code entered in the accepted FFIS document that posted the accounting entry.

14 **Fisc Month.** Displays the fiscal month entered in the accepted FFIS document that posted the accounting entry.

15 **Net Amount.** Displays the sum of all the lines in documents posted to the accounting distribution during the specified fiscal month.

After viewing the data, you have several options, as described below:

- To view another record, repeat the above process.

- To view another table, key in ***N*** at the Action field and the applicable table ID at the Table ID field, then press [Enter].

- To access a document screen, key in ***L*** at the Action field and the applicable document transaction code at the Table ID field. Use the [Space Bar] to erase the remaining 2 characters, then press [Enter].

- To exit the system, follow the sign-off instructions under **Part 2, Accessing The System**.

Orders Header Inquiry Table (OBLH)

The OBLH is used to view information about outstanding or recently closed purchase orders, (i.e., MO).

To access the OBLH, at the FFS screen, key in ***N*** at the Action field and ***OBLH*** at the TableID field, then press [Enter]. The OBLH screen (**Figure 8:148**) is displayed with an ***S*** in the Action field.

Displaying A Record. For instructions on displaying a record, see **Part 2, Using Tables**.

The fields on the OBLH are listed below with an explanation of each:

[1] **Action.** Displays ***S***.

[2] **TableID.** Displays ***OBLH***.

[3] **UserID.** Displays the user ID.

Note: Fields [4] through [50] are updated with information from purchase order document headers, except where otherwise indicated.

[4] **Trans Code** 🔑. Displays the code that identifies this order as a commodity purchase order, service order, training order, miscellaneous order, or work order.

[5] **Order Number** 🔑. Displays the document number assigned to this order.

[6] **Doc Type**. Displays a user-defined, alpha-numeric code, except for:

- ***S*** = Special instructions to be included on the printed order
- ***B*** = Blanket agreement

[7] **Vendor Code**. Displays the code of the vendor who receives this order.

[8] **PO Date.** Displays the date the purchase order was entered.

[9] **Trans Type**. Displays the accounting model used for this order. The codes for these models are defined in the ACED.

[10] **Name**. Displays the name of the vendor that matches the code above.

[11] **Delivery Date**. Displays the date by which the items ordered must be delivered.

[12] **Comments**. Displays a description of this order.

[13] **End Date**. Displays the date on which the service or contract of this order ends.

[14] **Contact**. Displays the name of the contact person for the vendor.

[15] **End Date Desc**. Displays comments about the end date.

[16] **Insp/Acc Days**. Displays the number of inspection and acceptance days for this order, which represent the number of days within which any goods received against this order must be marked as accepted.

[17] **Buyer**. Displays the purchasing buyer responsible for this order.

```
 ACTION: S [1]   TABLEID: OBLH [2]    USERID: NFxx [3]
                  *** ORDERS HEADER INQUIRY TABLE ***
KEY IS TRANS CODE, ORDER NUMBER
     TRANS CODE: [4]       ORDER NUMBER:[5]              DOC TYPE: [6]
    VENDOR CODE: [7]            PO DATE:[8]           TRANS TYPE: [9]
           NAME: [10]                                DELIVERY DATE: [11]
       COMMENTS: [12]                                    END DATE: [13]
        CONTACT: [14]                               END DATE DESC: [15]
  INSP/ACC DAYS: [16]         BUYER: [17]    COMM FLAG:[18]   SHIP TO: [19]
  NEG PYMT DAYS: [20]     TEXT TYPE: [21]          FOB:[22]  SHIP VIA: [23]
  NO OF OPTIONS: [24] PURCH METHOD: [25]           EFFECTIVE DATE: [26]
      ALT PAYEE: [27]           /
    ORDERED AMT: [28]                                 RELATED GBL: [29]
     CLOSED AMT: [30]                                 CLOSED DATE: [31]
    ACCRUED AMT: [32]                  PRINT PO: [33] LAST PRINT DATE: [34]
   EXPENDED AMT: [35]                                 LAST CHG STATUS: [36]
OUTSTANDING AMT: [37]                CONF ORDER: [38]      BLANKET #: [39]
   ACCEPTED AMT: [40]                 RCVR REQD: [41] FINAL REC FLAG: [42]
   INVOICED AMT: [43]                  INV REQD: [44]   INVITATION #: [45]
   MISC REF AMT: [46]                CONTRACT #: [47]
   HOLDBACK AMT: [48]                RESP PERSON:[49]
DISCOUNT % / DAYS: [50]   /     ;         /     ;         /
```

Figure 8:148. Orders Header Inquiry Table (OBLH)

[18] **Comm Flag**. Displays an indicator showing whether or not there are commodity lines associated with this order (***Y***=Yes, ***Blank***=No).

[19] **Ship To**. Displays the receiving location. These codes are defined in the SHIP.

[20] **Neg Pymt Days**. Displays the number of days negotiated for payment of this order after an invoice against it has been received.

[21] **Text Type**. Displays codes that are defined in the TXTP. They point to lines in the CLTX, which define text included on the printed purchase order sent to the vendor.

[22] **FOB**. Displays the freight on board code. This code is defined in the FOBT.

[23] **Ship Via**. Displays the carrier specified for this order. These codes are defined in the CARR.

[24] **No of Options**. Displays the number of years for which this contract can be renewed.

[25] **Purch Method**. Displays the values for the purchasing method which are user-defined.

[26] **Effective Date**. Displays the date used to determine the accounting period for which this accounting event was posted. Used for orders entered for future periods. Usually defaults to the document date.

[27] **Alt Payee**. Displays a payment issued on payment documents to either the vendor code or this alternate payee, which is also a valid vendor code.

[28] **Ordered Amt**. Displays the total dollar amount of all the lines on the order.

[29] **Related GBL**. Displays the document number of the Government Bill of Lading (GBL) that obligated freight-related costs for this order.

[30] **Closed Amt**. Displays the total amount of the order which has been closed. This amount is the sum of the closed order line amounts, even if the expended amount was more or less than the ordered amount. This field is updated by the receiver and payment documents.

[31] **Closed Date**. Displays the date when all accounting lines were closed on this order. Updated by the receiver and payment documents.

[32] **Accrued Amt**. Displays the total accrued amount of all the lines on this order. This field is updated by the receiver documents.

[33] **Print PO**. Displays an indicator showing whether or not to print a purchase order:

Y = Print this order

N = Not to print this order

[34] **Last Print Date**. Displays the date this order was last printed. This field is updated by the Purchase Order print program.

[35] **Expended Amt**. Displays the total amount expended to date on this order. This field is updated by the payment documents.

[36] **Last Chg Status**. Displays an indicator showing whether or not the order appears as changed when it is printed:

C	=	The order appears as changed.
A	=	The order appears as changed only on reprints.
Blank	=	The order does not appear as changed. If the order is printed online with the override parameter set to ***Y***, then this field is set to spaces before the order is printed.

This field is updated by the purchase order document headers and purchase order print program.

[37] **Outstanding Amt**. Displays the system-generated amount of the order still unliquidated (not closed).

[38] **Conf Order**. Displays a flag to indicate if the vendor has received a confirmation order.

[39] **Blanket #**. Displays the blanket agreement between the institution and the vendor that governs the terms of this order.

[40] **Accepted Amt**. Displays the dollar amount of all goods received and accepted against this order. This field is updated by the receiver documents.

[41] **Rcvr Reqd**. Displays an indicator showing whether or not a receiver document must be submitted for this order before payments are made. This field is updated by the receiver documents.

[42] **Final Rec Flag**. Displays a ***Y*** to indicate that a final receiver document was entered for the order; all goods have been received. Applies only to non-commodity orders. This field is updated by the receiver documents.

[43] **Invoiced Amt**. Displays the total amount of all vendor's invoices received against this order. This field is updated by the vendor invoice documents.

[44] **Inv Reqd**. Displays an indicator showing whether or not an invoice document must be submitted for this order before payment is made. This field is updated by the vendor invoice documents.

45 **Invitation #**. Displays the bid invitation number.

46 **Misc Ref Amt**. Displays the total amount of the order referenced by an ***MMM*** line. Updated by the payment documents with a reference line number of ***MMM***. This field is updated instead of the Closed Amount field.

47 **Contract #**. Displays the awarded contract number.

48 **Holdback Amt**. Displays the total amount of this order held back for later payment. This field is updated by the payment document lines.

49 **Resp Person**. Displays the person to whom questions about the order should be addressed.

50 **Discount%/Days**. Displays the discount terms associated with this order.

After viewing the data, you have several options, as described below:

- To view another record, repeat the above process.
- To view another table, key in ***N*** at the Action field and the applicable table ID at the Table ID field, then press [Enter].
- To access a document screen, key in ***L*** at the Action field and the applicable document transaction code at the Table ID field. Use the [Space Bar] to erase the remaining 2 characters, then press [Enter].
- To exit the system, follow the sign-off instructions under **Part 2, Accessing The System**.

Purchase Order Accounting Line Inquiry Table (OBLL)

The OBLL is used to view line-level accounting information about each outstanding or recently closed order.

To access the OBLL, at the FFS screen, key in ***N*** at the Action field and ***OBLL*** at the TableID field, then press [Enter]. The OBLL screen (**Figure 8:149**) is displayed with an ***S*** in the Action field.

Displaying A Record. For instructions on displaying a record, see **Part 2, Using Tables**.

The fields on the OBLL are listed below with an explanation of each:

1 **Action.** Displays ***S***.

2 **TableID.** Displays ***OBLL***.

3 **UserID.** Displays the user ID.

Note: Fields 4 through 26 are updated with information from purchase order document headers, except where otherwise indicated.

4 **Trans Code** 🔑. Displays the code that identifies this order as a commodity purchase order.

5 **Order Number** 🔑. Displays the document number assigned to this order.

6 **Line No** 🔑. Displays the number of the accounting line on the order.

7 **BFYs**. Displays the budget fiscal years under which this purchase order was obligated.

8 **Fund**. Displays the fund code under which this purchase order was obligated.

9 **Descr.** Displays the description that was entered on the purchase order.

10 **Last Change Status**. Displays a flag to indicate whether or not the order appears as changed when it is printed:

C	=	The order appears as changed.
A	=	The order appears as changed only on reprints.
Blank	=	The order does not appear as changed. If the order is printed online with the override parameter set to ***Y***, then this field is set to spaces before the order is printed.

This field is updated by the purchase order document lines and the Purchase Order Print program.

11 **Division**. Displays the division code as part of the accounting distribution for this order.

12 **Rptg**. Displays the reporting code as part of the accounting distribution for this order.

13 **PO Line Amt**. Displays the amount liquidated to date. This amount is set to the purchase order line liquidation amount, even if the expended amount was more or less than the purchase order line amount.

14 **Bud Org**. Displays the budget organization code as part of the accounting distribution for this order.

15 **Closed Amt**. Displays the total amount of the order which has been closed. This amount is the sum of the closed order line amounts, even if the expended amount was more or less than the ordered amount. This field is updated by the receiver and payment documents.

```
ACTION: S 1  TABLEID: OBLL 2       USERID: NFxx 3
            *** PURCHASE ORDER ACCOUNTING LINE INQUIRY TABLE ***
KEY IS TRANS CODE, ORDER NUMBER, LINE NO
     TRANS CODE: 4     ORDER NUMBER: 5
01-              LINE NO: 6                BFYS:  7   FUND: 8
        DESCR:  9                              LAST CHANGE STATUS:  10
     DIVISION:  11            RPTG:  12        PO LINE AMT: 13
      BUD ORG:  14      /                      CLOSED AMT: 15
     COST ORG:  16      /       JOB:  17       ACCRUED AMT: 18
      PROGRAM:  19         BOC/SUB:  20       EXPENDED AMT: 21
    ASSOC ORDER: 22                           HOLDBACK AMT: 23
    CLOSED BFYS: 24     CLOSED FUND: 25     OUTSTANDING AMT: 26
02-              LINE NO:                  BFYS:       FUND:
        DESCR:                                 LAST CHANGE STATUS:
     DIVISION:            RPTG:                PO LINE AMT:
      BUD ORG:      /                          CLOSED AMT:
     COST ORG:      /       JOB:               ACCRUED AMT:
      PROGRAM:         BOC/SUB:               EXPENDED AMT:
    ASSOC ORDER:                              HOLDBACK AMT:
    CLOSED BFYS:       CLOSED FUND:         OUTSTANDING AMT:
```

Figure 8:149. Purchase Order Accounting Line Inquiry Table (OBLL)

16 **Cost Org**. Displays the cost organization code as part of the accounting distribution for this order.

17 **Job**. Displays the job number as part of the accounting distribution for this order.

18 **Accrued Amt**. Displays the total accrued amount of all the lines on this order. This field is updated by the receiver documents.

19 **Program**. Displays the program code as part of the accounting distribution for this order.

20 **BOC/Sub**. Displays the budget object classification code as part of the accounting distribution for this order.

21 **Expended Amt**. Displays the total amount expended to date on this order. This field is updated by the payment documents.

22 **Assoc Order**. Displays the transaction code and document number of an order associated with this order.

23 **Holdback Amt**. Displays the total amount of this order held back for later payment. This field is updated by the payment document lines.

24 **Closed BFYs**. Displays the budget fiscal years of the closed appropriation referenced by this purchase order line.

25 **Closed Fund**. Displays the fund of the closed appropriation referenced by this purchase order line.

26 **Outstanding Amt**. Displays the amount of the order line still unliquidated (not closed).

After viewing the data, you have several options, as described below:

- To view another record, repeat the above process.

- To view another table, key in ***N*** at the Action field and the applicable table ID at the Table ID field, then press [Enter].

- To access a document screen, key in ***L*** at the Action field and the applicable document transaction code at the Table ID field. Use the [Space Bar] to erase the remaining 2 characters, then press [Enter].

- To exit the system, follow the sign-off instructions under **Part 2, Accessing The System**.

Object Revenue Class Inquiry Table (OBRV)

The OBRV is used to view information on valid budget object codes and revenue source codes grouped by class. It is used in the PBDF expansion process for pool and base records which have been defined using object or revenue class as part of the key.

To access the OBRV, at the FFS screen, key in ***N*** at the Action field and ***OBRV*** at the TableID field, then press [Enter]. The OBRV screen (**Figure 8:150**) is displayed with an ***S*** in the Action field.

Displaying A Record. For instructions on displaying a record, see **Part 2, Using Tables**.

The fields on the OBRV are listed below with an explanation of each:

[1] **Action.** Displays ***S***.

[2] **TableID.** Displays ***OBRV***.

[3] **UserID.** Displays the user ID.

[4] **BOC/Rev Ind** 🔑**.** Displays one of the following:

O = Indicates object classes
R = Indicates revenue classes

This field is updated through the Object/Revenue Class Table process.

[5] **BOC/Rev Class** 🔑**.** Displays the object or revenue class, depending on the Object/Revenue Indicator. This field is updated through the Object/Revenue Class Table process.

[6] **BOC/Rev Code** 🔑**.** Displays the budget object code or revenue source code associated with the class. This field is updated through the OBRV process.

After viewing the data, you have several options, as described below:

- To view another record, repeat the above process.
- To view another table, key in ***N*** at the Action field and the applicable table ID at the Table ID field, then press [Enter].
- To access a document screen, key in ***L*** at the Action field and the applicable document transaction code at the TableID field. Use the [Space Bar] to erase the remaining 2 characters, then press [Enter].
- To exit the system, follow the sign-off instructions under **Part 2, Accessing The System**.

```
ACTION: S [1]  TABLEID: OBRV[2]   USERID: NFxx[3]
                  *** OBJECT REVENUE CLASS INQUIRY TABLE ***
KEY IS BOC/REV IND, BOC/REV CLASS, BOC/REV CODE
    BOC/REV IND    BOC/REV CLASS    BOC/REV CODE
    -----------    -------------    ------------
01-    [4]            [5]              [6]
02-
03-
04-
05-
06-
07-
08-
09-
10-
11-
12-
13-
14-
15-
16-
```

Figure 8:150. Object Revenue Class Inquiry Table (OBRV)

OTRS-FFIS Interface Document Inquiry Table (OIDT)

The OIDT is used to view Online Payments and Collection (OPAC) transactions which were initiated by another government entity. The transactions charge or credit RD Agency Location Code 12-40-0700. The charge or credit represents a completed transfer of funds with Treasury acting as the banker. A 480-character record is created by the OTRS-FFIS interface. This record records the fund transfer as a suspense transaction.

Research and analysis is conducted by NFC to determine valid accounting. Research includes calling the initiating entity and RD personnel if sufficient accounting data has not been provided. NFC personnel will then reverse the suspense transaction and record valid RD accounting using a DD.

To access the OIDT, at the FFS screen, key in ***N*** at the Action field and ***OIDT*** at the TableID field, then press [Enter]. The OIDT screen (**Figure 8:151**) is displayed with an ***S*** in the Action field.

Displaying A Record. For instructions on displaying a record, see **Part 2, Using Tables**.

The fields on the OIDT are listed below with an explanation of each:

1 **Action.** Displays ***S***.

2 **TableID.** Displays ***OIDT***.

3 **UserID**. Displays the user ID.

4 **Bill #** 🔑. Displays the OPAC bill number.

5 **Accomplished Date** 🔑. Displays the bill date.

6 **Agency** 🔑. Displays the agency code.

7 **FFIS DocID**. Displays the FFIS Doc ID. The FFIS Doc ID consist of a 2-position transaction code, 2-position sec1 code, and a 11-position transaction number.

8 **Vendor**. Displays the vendor code.

9 **Amount**. Displays the bill amount.

10 **Created By**. Displays the program which created the entry.

11 **Date**. Displays the date created.

12 **Customer ALC**. Displays the customer ALC.

13 **Vendor ALC**. Displays the vendor ALC.

14 **Descriptive Text**. Displays in the bill description.

After viewing the data, you have several options, as described below:

- To view another record, repeat the above process.
- To view another table, key in ***N*** at the Action field and the applicable table ID at the Table ID field, then press [Enter].
- To access a document screen, key in ***L*** at the Action field and the applicable document transaction code at the TableID field. Use the [Space Bar] to erase the remaining 2 characters, then press [Enter].
- To exit the system, follow the sign-off instructions under **Part 2, Accessing The System**.

```
ACTION: S [1]  TABLEID: OIDT [2]  USERID: NFxx    [3]

                    ***OTRS«FFIS INTERFACE DOCUMENT INQUIRY TABLE***

KEY IS BILL #, BILL DATE, AGENCY
       BILL#:  [4]     ACCOMPLISHED DATE:[5]  /    /    AGENCY: [6]
  FFIS DOCID:  [7]                  VENDOR:    [8]
      AMOUNT:  [9]
  CREATED BY:  [10]     DATE:[11]  /    /
CUSTOMER ALC:  [12]      VENDOR ALC:     [13]
DESCRIPTIVE TEXT: [14]
```

Figure 8:151. OTRS-FFIS Interface Document Inquiry Table (OIDT)

Pending Appropriation Inquiry Table (PAPP)

The PAPP is used to view:

- Pending and approved appropriation warrant amounts.
- Public law and warrant number.
- President's budget amount.

To access the PAPP, at the FFS screen, key in ***N*** at the Action field and ***PAPP*** at the TableID field, then press [Enter]. The PAPP screen (**Figure 8:152**) is displayed with an ***S*** in the Action field.

Displaying a Record. For instructions on displaying a record, see **Part 2, Using Tables**.

The fields on the PAPP are listed below with an explanation of each:

[1] **Action.** Displays ***S***.

[2] **TableID.** Displays ***PAPP***.

[3] **UserID.** Displays the user ID.

[4] **Budget Fiscal Years** 🔑. Displays the budget fiscal years of the appropriation.

[5] **Fund** 🔑. Displays the fund identifying the appropriation.

[6] **Public Law**. Displays the public law authorizing the appropriation.

[7] **President's Budget Amt.** Displays the amount reported to Treasury under the Continuing Resolution Act (CRA).

[8] **Last Warrant #**. Displays the number of the last warrant received from Treasury for this appropriation.

[9] **Oblig Avail Prior Yr.** Displays the amount reported to Treasury under the Continuing Resolution Act.

[10] **Pending Appr Amt.** Displays the appropriation amount waiting for approval.

[11] **Trans Code/Type**. Displays the appropriation's transaction code and transaction type. These define the type of accounting event used to post to ledgers and journals.

[12] **Approved Appr Amt**. Displays the approved warrants amount.

After viewing the data, you have several options, as described below:

- To view another record, repeat the above process.
- To view another table, key in ***N*** at the Action field and the applicable table ID at the TableID field, then press [Enter].
- To access a document screen, key in ***L*** at the Action field and the applicable document transaction code at the TableID field. Use the [Space Bar] to erase the remaining 2 characters, then press [Enter].
- To exit the system, follow the sign-off instructions under **Part 2, Accessing The System**.

```
ACTION: S [1]   TABLEID: PAPP [2]   USERID: NFXX     [3]

                *** PENDING APPROPRIATION INQUIRY TABLE ***
KEY IS BUDGET FISCAL YEARS, FUND

BUDGET FISCAL YEARS: [4]     FUND:   [5]

      PUBLIC LAW: [6]            PRESIDENT'S BUDGET AMT: [7]
  LAST WARRANT #: [8]              OBLIG AVAIL PRIOR YR: [9]

       PENDING APPR AMT: [10]                TRANS CODE/TYPE:  [11]

      APPROVED APPR AMT: [12]
```

Figure 8:152. Pending Appropriation Inquiry Table (PAPP)

Voucher Holdback Inquiry Table (PVCH)

The PVCH is used to view:

- Details about contract holdbacks.
- Information from the payment voucher lines that contain a line type of ***H***.

To access the PVCH, at the FFS screen, key in ***N*** at the Action field and ***PVCH*** at the TableID field, then press [Enter]. The PVCH screen (**Figure 8:153**) is displayed with an ***S*** in the Action field.

Displaying a Record. For instructions on displaying a record, see Part 2, Using Tables.

The fields on the PVCH are listed below with an explanation of each:

[1] **Action.** Displays ***S***.

[2] **TableID.** Displays ***PVCH***.

[3] **UserID.** Displays the user ID.

Note: Fields [4] through [32] are updated by PV lines.

[4] **Vendor Code** 🔑. Displays the vendor code or employee ID to which payment is being withheld.

[5] **Trans Code** 🔑. Displays the code that identifies the document as a PV.

[6] **Voucher No** 🔑**.** Displays the document number assigned to the PV.

[7] **Travel Advance Numb** 🔑. Displays the number of the travel advance used to reference an accounting distribution.

[8] **Line Number** 🔑. Displays the number of the accounting line for which payment is being withheld.

[9] **Vendor Inv.** Displays information from the invoice received from the vendor.

[10] **Vendor Inv Line #.** Displays information from the invoice received from the vendor.

[11] **Inv Date.** Displays information from the invoice received from the vendor.

[12] **Log Date.** Displays the date the vendor invoice was logged.

[13] **Accp/Del Date.** Displays the date the goods were accepted or delivered.

[14] **BFY.** Displays the budget fiscal year used for this payment.

[15] **Fund.** Displays the fund code to be obligated.

[16] **Trans Type.** Displays the accounting model used for this payment. The codes for these models are defined in the ACED.

```
ACTION: S [1]  TABLEID: PVCH [2]  USERID: NFxx [3]
                    *** VOUCHER HOLDBACK INQUIRY TABLE ***
KEY IS VENDOR CODE, TRANS CODE, VOUCHER NO, TRAVEL ADVANCE NUMB, LINE NUMBER

 VENDOR CODE: [4]          TRANS CODE: [5]    VOUCHER NO: [6]
 TRAVEL ADVANCE NUMB: [7]
01-
    LINE NUMBER: [8]   VENDOR INV: [9]        VENDOR INV LINE #: [10]
    INV DATE:    [11]    LOG DATE: [12]      ACCP/DEL DATE:  [13]
         BFY:    [14]       FUND: [15]         TRANS TYPE:  [16]  ADV: [17]
    DIVISION:    [18]    PROGRAM: [19]        HOLDBACK AMT:  [20]
     BUD ORG/SUB:    [21]    RPTG: [22]
    COST ORG/SUB:    [23]     JOB: [24]
     REV SRC/SUB:    [25]  BOC/SUB: [26]
     CLOSED BFYS:    [27]  CLOSED FUND: [28]

      REF DOC NO:    [29]         REF DOC LINE: [30]
     RELATED GBL:    [31]       OVERRIDE ACCT: [32]  OVER OFFSET ACCT: [33]
     DESCRIPTION:    [34]                        QTY: [35]
```

Figure 8:153. Voucher Holdback Inquiry Table (PVCH)

17 **Adv.** Displays an ***A*** to indicate that this payment document line is a refund of an amount previously advanced by an outside organization for work against a billable agreement. Displays a ***N*** to indicate this payment is not a refund of an advance amount.

18 **Division.** Displays the division responsible for this payment.

19 **Program.** Displays the program code for this payment.

20 **Holdback Amt.** Displays the amount of the voucher that has been held back for later payment.

21 **Bud Org/Sub.** Displays the code of the budget organization/suborganization for this payment.

22 **Rptg.** Displays the code of the reporting category for this payment.

23 **Cost Org/Sub.** Displays the code of the cost organization/suborganization for this payment.

24 **Job**. Displays the job number for this payment.

25 **Rev Src/Sub.** Displays the revenue/sub revenue source code for this payment.

26 **BOC/Sub.** Displays the budget object code for this payment.

27 **Closed BFYs.** Displays the budget fiscal years of the canceled appropriation referenced by this document.

28 **Closed Fund.** Displays the fund code of the canceled appropriation referenced by this document.

29 **Ref Doc No**. Displays the transaction code and document number of a prior document recording a commitment, obligation, or receipt.

30 **Ref Doc Line**. Displays the line number of a prior document recording a commitment, obligation, or receipt.

31 **Related GBL.** Displays the obligation number of the document that was used to obligate for freight charges related to this line.

32 **Override Acct.** Displays the override account that was used to post the General Ledger. The account overrides the account in the ACED.

33 **Over Offset Acct.** Displays the code of the General Ledger account used in the offset entry, when an override to the default in the ACED was specified in the DVAL.

34 **Description.** Displays a description of this transaction.

35 **Qty.** Displays the quantity of paid goods.

After viewing the data, you have several options, as described below:

- To view another record, repeat the above process.

- To view another table, key in ***N*** at the Action field and the applicable table ID at the TableID field, then press [Enter].

- To access a document screen, key in ***L*** at the Action field and the applicable document transaction code at the TableID field. Use the [Space Bar] to erase the remaining 2 characters, then press [Enter].

- To exit the system, follow the sign-off instructions under **Part 2, Accessing The System**.

Voucher Header Inquiry Table (PVHT)

The PVHT is used to view summary information about outstanding and closed PV for the following transaction categories:

DD = Direct Disbursement
NC = No Check Expenditure
PV = Payment Voucher

To access the PVHT, at the FFS screen, key in ***N*** at the Action field and ***PVHT*** at the TableID field, then press [Enter]. The PVHT screen (**Figure 8:154**) is displayed with an ***S*** in the Action field.

Displaying a Record. For instructions on displaying a record, see **Part 2, Using Tables**.

The fields on the PVHT are listed below with an explanation of each:

[1] **Action.** Displays ***S***.

[2] **TableID.** Displays ***PVHT***.

[3] **UserID.** Displays the user ID.

Note: Fields [4] through [34] are updated by payment transactions, unless otherwise stated.

[4] **Vendor Code** 🔑. Displays the vendor code or employee ID to whom payment was issued.

[5] **Trans Code** 🔑. Displays the code that identifies the document as a PV.

[6] **Voucher No** 🔑**.** Displays the document number assigned to the PV.

[7] **Name.** Displays the vendor's name.

[8] **Travel Advance Num** 🔑. Displays the number of the advance used to reference an accounting distribution. Applies to travel order transactions only.

[9] **Address.** Displays the vendor's address.

[10] **No Check Disb Flag.** Displays ***Y*** to indicate that this payment is a disbursement that does not have a check associated with it. Displays ***N*** to indicate that this payment is a disbursement that has a check.

[11] **Prompt Pay Type.** Displays the prompt pay type associated with this payment if it is subject to prompt payment.

[12] **Description.** Displays a description of this transaction.

[13] **FA Ind.** Displays one of the following:

Y = This payment is for a fixed asset.
M = This payment is not for a fixed asset.

[14] **Voucher Type.** Displays user-defined values.

```
ACTION: S [1] TABLEID: PVHT [2] USERID: NFxx [3]
                  *** VOUCHER HEADER INQUIRY TABLE ***
KEY IS VENDOR CODE, TRANS CODE, VOUCHER NO, TRAVEL ADVANCE NUM
01-
     VENDOR CODE: [4]          TRANS CODE: [5]   VOUCHER NO: [6]
            NAME: [7]                           TRAVEL ADVANCE NUM: [8]
         ADDRESS: [9]                           NO CHECK DISB FLAG: [10]
                :                                  PROMPT PAY TYPE: [11]
                :
     DESCRIPTION: [12]                              FA IND: [13]
    VOUCHER TYPE: [14]                         CHECK TYPE: [15]   D.O.: [16]
    AGREEMENT # : [17]                   DISB RUN NUMBER: [18]
    SCHD FISC YR: [19]  SCHD CAT: [20] SCHD TYP: [21] SCHD NO: [22]
    VOUCHER DATE: [23]                     VOUCHER AMT: [24]
       SCHD DATE: [25]                    HOLDBACK AMT: [26]
     CLOSED DATE: [27]                      CLOSED AMT: [28]
                                          OUTSTANDING AMT: [29]
    AGENCY HEAD APRVL: [30]                IN TRANSIT AMT: [31]
    COMMENTS TO PRINT: [32]
     INTR AGCY SYMBOL: [33]          DIRECT DISB NUMBER: [34]
```

Figure 8:154. Voucher Header Inquiry Table (PVHT)

[15] **Check Type**. Displays one of the following:

H	=	This check should not be mailed, but picked up by the payee.
C	=	This payment contains a comment card.
S	=	This check held for additional stuffing.
B	=	This check both picked up and stuffed.
Blank	=	This check can be mailed after it has been printed.

[16] **D.O.** Displays the disbursing office code for this payment.

[17] **Agreement #.** Displays the agreement number (along with the payee code) links the payment to the appropriate customer agreement if this payment represents a refund of money collected against a billable agreement.

[18] **Disb Run Number.** Displays a voucher selection and is used by the Accounts Payable and Automated Disbursements function to determine if a given voucher has been selected for payment. This field is always zero if the check printing disbursements model is not being used. This field is updated by the Disbursements process.

[19] **Schd Fisc Yr.** Displays the fiscal year associated with the Treasury schedule if the Schedule Category is **M** (manual SF–1166). This field is used by organizations that are Treasury-disbursed.

[20] **Schd Cat.** Displays one of the following to indicate the method of disbursement used for this payment:

T	=	Treasury check tape
M	=	Manual SF–1166
A	=	ACH payment tape
S	=	TFCS SF–1166

[21] **Schd Typ.** Displays one of the following:

T	=	Transportation payments to common carriers.
M	=	All other payments.

[22] **Schd No.** Displays the agency's identification number for the manual SF–1166 in which this payable is listed if the Schedule Category is ***M***.

[23] **Voucher Date.** Displays the date this document was accepted by the system.

[24] **Voucher Amt.** Displays the total dollar amount of all lines in the document.

[25] **Schd Date.** Displays the date when this voucher is scheduled to be paid.

[26] **Holdback Amt.** Displays the amount of the voucher that has been held back for later payment.

[27] **Closed Date.** Displays the date in which the vendor was closed. This field is updated by the Disbursements process.

[28] **Closed Amt.** Displays the total amount cleared so far in this voucher document. This amount is reversed if a check cancellation to reinstate the payment voucher is processed. This field is updated by the Disbursements process.

[29] **Outstanding Amt**. Displays the amount of the voucher that has not been cleared by automated disbursements or direct disbursements. This is the voucher amount minus the voucher closed amount. This field is updated by the Disbursements process.

[30] **Agency Head Aprvl.** Displays one of the following:

Y	=	The voucher was scheduled 8 or more days in advance of the prompt pay schedule date and the agency head approved the early payment.
N	=	This payment is not for a fixed asset.
Blank	=	Not an early payment.

[31] **In Transit Amt.** Displays for Treasury-disbursing organizations, the amount submitted to Treasury for payment, but not yet confirmed by Treasury as paid. If disbursement was manual, this was supplied when the payable transaction was entered. If disbursement was automated, this was supplied by the automated disbursement process.

This amount is updated if a check cancellation for replacement is processed. This field is updated by the Disbursements process, Manual Schedule payment transactions.

[32] **Comments To Print.** Displays the comments that appear on the face of Treasury-disbursed checks or in the check stub of agency-printed checks.

[33] **Intr Agcy Symbol.** Displays a direct disbursement only. If payment was made to another government agency, displays Treasury's identification number of the outside agency. This field is updated by the DD.

[34] **Direct Disb Number.** Displays the transaction ID of the DD that recorded the payment if this voucher was paid by a direct disbursement. This field is updated by the DD.

After viewing the data, you have several options, as described below:

- To view another record, repeat the above process.

- To view another table, key in ***N*** at the Action field and the applicable table ID at the TableID field, then press [Enter].

- To access a document screen, key in ***L*** at the Action field and the applicable document transaction code at the TableID field. Use the [Space Bar] to erase the remaining 2 characters, then press [Enter].

- To exit the system, follow the sign-off instructions under **Part 2, Accessing The System**.

Voucher Line Inquiry Table (PVLT)

The PVLT is used to view details about outstanding and closed voucher lines.

To access the PVLT, at the FFS screen, key in ***N*** at the Action field and ***PVLT*** at the TableID field, then press [Enter]. The PVLT screen (**Figure 8:155**) is displayed with an ***S*** in the Action field.

Displaying a Record. For instructions on displaying a record, see **Part 2, Using Tables**.

The fields on the PVLT are listed below with an explanation of each:

1 **Action.** Displays ***S***.

2 **TableID.** Displays ***PVLT***.

3 **UserID.** Displays the user ID.

Note: Fields 4 through 44 are updated by payment transactions, unless otherwise stated.

4 **Vendor Code** 🔑. Displays the vendor code or employee ID of who was paid.

5 **Trans Code**. 🔑. Displays the code that identifies the document as a PV.

6 **Voucher No** 🔑**.** Displays the document number assigned to the PV.

7 **Travel Advance Number** 🔑. Displays the number of the advance used to reference an accounting distribution. Applies to travel order transactions only.

8 **Line Number** 🔑. Displays the number of the accounting line in the PV.

9 **Vendor Inv.** Displays information from the invoice received from the vendor.

10 **Vendor Inv Line #.** Displays information from the invoice received from the vendor.

11 **Inv Date.** Displays information from the invoice received from the vendor.

12 **Log Date.** Displays the official receipt date of the vendor invoice, as used in prompt pay calculations. It may have either been entered in the payment document or inferred from Document Tracking, the vendor invoice date, or transaction date.

13 **Accp/Del Date.** Displays the date when the goods being paid for were accepted or delivered.

14 **BFY.** Displays the budget fiscal year used for this payment.

15 **Fund.** Displays the code of the fund to be obligated.

16 **Trans Type.** Displays the accounting model used for this payment. The codes for these models are defined in the ACED.

17 **Adv.** Displays ***A*** to indicate that this line is a refund of monies advanced against a customer agreement. Displays ***N*** to indicate this line is not a refund of monies advanced against a customer agreement.

18 **Division.** Displays the division responsible for this payment.

```
ACTION: S [1]  TABLEID: PVLT [2]  USERID:NFxx [3]
                    *** VOUCHER LINE INQUIRY TABLE ***
KEY IS VENDOR CODE, TRANS CODE, VOUCHER NO, TRAVEL ADVANCE NUMBER, LINE NUMBER

 VENDOR CODE: [4]          TRANS CODE:  [5]   VOUCHER NO:  [6]
 TRAVEL ADVANCE NUMBER:[7]
01-
    LINE NUMBER:  [8]  VENDOR INV:   [9]       VENDOR INV LINE #: [10]
    INV DATE: [11]       LOG DATE:  [12]     ACCP/DEL DATE: [13]
         BFY: [14]           FUND:  [15]        TRANS TYPE: [16]  ADV: [17]
    DIVISION: [18]       PROGRAM:  [19]          LINE AMT: [20]
     BUD ORG/SUB: [21]       RPTG:  [22]        CLOSED AMT: [23]
    COST ORG/SUB: [24]        JOB:  [25]          DISB AMT: [26]
     REV SRC/SUB: [27]    BOC/SUB:  [28]   IN TRANSIT AMT: [29]
     CLOSED BFYS: [30]    CLOSED FUND:  [31]

      REF DOC NO: [32]          REF DOC LINE: [33]
     RELATED GBL: [34]       OVERRIDE ACCT: [35]  OVER OFFSET ACCT: [36]
      PROMPT PAY: [37]  INTEREST REASON CODE: [38]         LINE TYPE: [39]
      DISCOUNT %: [40]       DISCOUNT DAYS: [41]DISC LOST RSN CODE: [42]
     DESCRIPTION: [43]                          QTY: [44]
```

Figure 8:155. Voucher Line Inquiry Table (PVLT)

[19] **Program.** Displays the program code for this payment.

[20] **Line Amt.** Displays the amount of the payment for this line.

[21] **Bud Org/Sub.** Displays the code of the budget organization/suborganization for this payment.

[22] **Rptg.** Displays the code of the reporting category for this payment.

[23] **Closed Amt.** Displays the total amount cleared so far in this line. This amount is reversed if a check cancellation to reinstate the payment voucher is processed. This field is updated by the Disbursements process and payment transactions.

[24] **Cost Org/Sub.** Displays the code of the cost organization/suborganization for this payment.

[25] **Job**. Displays the job number for this payment.

[26] **Disb Amt.** Displays the total amount paid so far in this line. This is the total of all direct disbursements and automated disbursement transactions against this line. This field is updated by the Disbursements process and the Manual Schedule payment transactions.

[27] **Rev Src/Sub.** Displays the revenue/sub revenue source code for this payment.

[28] **BOC/Sub.** Displays the budget object code for this payment.

[29] **In Transit Amt.** Displays for Treasury-disbursing organizations, the amount submitted to Treasury for payment, but not yet confirmed by Treasury as paid. If disbursement was manual, this was supplied when the payable transaction was entered. If disbursement was automated, this was supplied by the automated disbursement process. This field is updated by the Disbursements process and the Manual Schedule payment transactions.

[30] **Closed BFYs.** Displays the budget fiscal years of the canceled appropriation referenced by this document.

[31] **Closed Fund.** Displays the fund code of the canceled appropriation referenced by this document.

[32] **Ref Doc No**. Displays the transaction code, document number, and line number of a prior document recording a commitment, obligation, or receipt.

[33] **Ref Doc Line**. Displays the transaction code, document number, and line number of a prior document recording a commitment, obligation, or receipt.

[34] **Related GBL.** Displays the obligation number of the document that was used to obligate for freight charges related to this payment voucher line.

[35] **Override Acct.** Displays the override account code that was used to post the General Ledger. This account overrides the account in the ACED.

[36] **Over Offset Acct.** Displays the code of the General Ledger account used in the offset entry, when an override to the default in the ACED was specified in the DVAL.

[37] **Prompt Pay.** Displays a flag to override prompt payment regulations for this payment line. If ***N***, prompt payment regulations will not be invoked. If ***Blank*** or ***Y***, prompt payment regulations will be invoked.

[38] **Interest Reason Code.** Displays the interest reason code. These codes are defined in the IRCT.

[39] **Line Type**. Displays one of the following codes:

H	=	Holdback line.
I	=	Manually entered interest line.
P	=	Manually entered penalty line.
N or ***Blank***	=	Normal payment line.
O	=	Owed to employee line.

[40] **Discount %.** Displays the discount percent of the best discount terms available. It reflects the discount whether taken or lost.

[41] **Discount Days.** Displays the discount days of the best discount terms available. It reflects the discount whether taken or lost.

[42] **Disc Lost Rsn Code.** Displays the discount lost reason code applied when an available discount was not taken.

[43] **Description.** Displays a description of this transaction.

[44] **Qty.** Displays the quantity of paid goods.

After viewing the data, you have several options, as described below:

- To view another record, repeat the above process.
- To view another table, key in ***N*** at the Action field and the applicable table ID at the TableID field, then press [Enter].
- To access a document screen, key in ***L*** at the Action field and the applicable document transaction code at the TableID field. Use the [Space Bar] to erase the remaining 2 characters, then press [Enter].
- To exit the system, follow the sign-off instructions under **Part 2, Accessing The System**.

Receiver Header Inquiry Table (RCHT)

The RCHT is used to view information about the details pertaining to the receipt for goods ordered, such as: date, receiver, and carrier.

To access the RCHT, at the FFS screen, key in ***N*** at the Action field and ***RCHT*** at the TableID field, then press [Enter]. The RCHT table screen (**Figure 8:156**) is displayed with an ***S*** in the Action field.

Displaying A Record. For instructions on displaying a record, see **Part 2, Using Tables**.

The fields on the RCHT table are listed below with an explanation of each:

[1] **Action.** Displays ***S***.

[2] **TableID.** Displays ***RCHT***.

[3] **UserID.** Displays the user ID.

Note: Fields [4] through [16] are updated with information from receiver document headers, unless otherwise stated.

[4] **Trans Code** 🔑. Displays the code used to identify this order as a receiver.

[5] **Receiver Number** 🔑. Displays the document number assigned to this receiver.

[6] **Date**. Displays the date the document was entered.

[7] **Vendor Code**. Displays the code that identifies the vendor for this purchase.

[8] **Ref Order ID**. Displays the document code and number of the order this receiver references.

[9] **Carrier**. Displays the code and name of the carrier who delivered the goods.

[10] **Received By**. Displays the name of the person who received the goods.

[11] **Total Quantity Received**. Displays the total quantity of goods received.

[12] **Total Quantity Accepted**. Displays the total quantity of goods accepted.

[13] **Accrual Amount**. Displays the total amount of all lines on the receiver.

[14] **Closed Date**. Displays the date when all accounting lines were closed on this receiver. This field is updated by the payment documents.

[15] **Vouchered Amount**. Displays the total amount expended to date on this receiver. This field is updated by the payment documents.

[16] **Closed Amount**. Displays the total amount of the order which has been closed. This amount is the sum of the closed order line amounts, even if the expended amount was more or less than the ordered amount. This field is updated by the payment documents.

```
ACTION: S  [1]  TABLEID: RCHT  [2]  USERID: NFxx  [3]
                  *** RECEIVER HEADER INQUIRY TABLE ***
KEY IS TRANS CODE, RECEIVER NUMBER

01-
    TRANS CODE: [4]  RECEIVER NUMBER: [5]        DATE: [6]
    VENDOR CODE:[7]                          REF ORDER ID:  [8]
    CARRIER:    [9]                           RECEIVED BY:  [10]
    TOTAL QUANTITY RECEIVED: [11]          TOTAL QUANTITY ACCEPTED: [12]
       ACCRUAL AMOUNT:       [13]               CLOSED DATE: [14]
     VOUCHERED AMOUNT:       [15]
        CLOSED AMOUNT:       [16]
02-
    TRANS CODE:     RECEIVER NUMBER:             DATE:
    VENDOR CODE:                             REF ORDER ID:
    CARRIER:                                  RECEIVED BY:
    TOTAL QUANTITY RECEIVED:               TOTAL QUANTITY ACCEPTED:
       ACCRUAL AMOUNT:                          CLOSED DATE:
     VOUCHERED AMOUNT:
        CLOSED AMOUNT:
```

Figure 8:156. Receiver Header Inquiry Table (RCHT)

After viewing the data, you have several options, as described below:

- To view another record, repeat the above process.

- To view another table, key in ***N*** at the Action field and the applicable table ID at the TableID field, then press [Enter].

- To access a document screen, key in ***L*** at the Action field and the applicable document transaction code at the Table ID field. Use the [Space Bar] to erase the remaining 2 characters, then press [Enter].

- To exit the system, follow the sign-off instructions under **Part 2, Accessing The System**.

Receiver Accounting Line Inquiry Table (RCLA)

The RCLA is used to view information about the details pertaining to accounting line for each outstanding or recently closed RC.

To access the RCLA, at the FFS screen, key in ***N*** at the Action field and ***RCLA*** at the TableID field, then press [Enter]. The RCLA screen (**Figure 8:157**) is displayed with an ***S*** in the Action field.

Displaying A Record. For instructions on displaying a record, see **Part 2, Using Tables**.

The fields on the RCLA are listed below with an explanation of each:

[1] **Action.** Displays ***S***.

[2] **TableID.** Displays ***RCLA***.

[3] **UserID.** Displays the user ID.

Note: Fields [4] through [22] are updated with information from receiver document lines, unless otherwise stated.

[4] **Transaction Code** 🔑. Displays the code to identify this as a receiver document.

[5] **Receiver Number** 🔑. Displays the document number assigned to this receiver.

[6] **Line Number**. Displays the number of the accounting line on the receiver.

[7] **Ref Accounting Line Number** 🔑. Displays the line number of the referenced document.

[8] **Transaction Type**. Displays the accounting model used for this receiver. The codes are defined in the ACED.

[9] **BFYs**. Displays the budget fiscal year as part of the accounting distribution for this receiver.

[10] **Fund**. Displays the fund code as part of the accounting distribution for this receiver.

[11] **Org/Sub**. Displays the organization code as part of the accounting distribution for this receiver.

[12] **Cost Org/Sub**. Displays the cost organization code as part of the accounting distribution for this receiver.

[13] **Program**. Displays the program code as part of the accounting distribution for this receiver.

[14] **BOC/Sub**. Displays the budget object classification code as part of the accounting distribution for this receiver.

[15] **Job**. Displays the job number as part of the accounting distribution for this receiver.

[16] **Rptg**. Displays the reporting code as part of the accounting distribution for this receiver.

[17] **Closed BFYs**. Displays the budget fiscal years of the closed appropriation referenced by this purchase order line.

[18] **Closed Fund**. Displays the fund of the closed appropriation referenced by this purchase order line.

[19] **Desc**. Displays a description of the receiver.

```
ACTION: S [1] TABLEID: RCLA[2]  USERID: NFxx [3]
              *** RECEIVER ACCOUNTING LINE INQUIRY TABLE ***
KEY IS TRANSACTION CODE, RECEIVER NUMBER, REF ACCOUNTING LINE NUMBER

TRANSACTION CODE: [4]  RECEIVER NUMBER: [5]
01- LINE NUMBER: [6]  REF ACCOUNTING LINE NUMBER: [7]  TRANSACTION TYPE: [8]
    BFYS: [9]    FUND: [10]     ORG/SUB: [11]    /    COST ORG/SUB: [12]    /
    PROGRAM: [13]       BOC/SUB: [14]  /     JOB: [15]       RPTG: [16]
    CLOSED BFYS: [17]    CLOSED FUND: [18]
    DESC: [19]                              ACCRUAL AMOUNT: [20]
    VOUCHERED AMOUNT: [21]                   CLOSED AMOUNT: [22]
02- LINE NUMBER:      REF ACCOUNTING LINE NUMBER:      TRANSACTION TYPE:
    BFYS:       FUND:         ORG/SUB:         /     COST ORG/SUB:         /
    PROGRAM:            BOC/SUB:      /     JOB:           RPTG:
    CLOSED BFYS:        CLOSED FUND:
    DESC:                                   ACCRUAL AMOUNT:
    VOUCHERED AMOUNT:                        CLOSED AMOUNT:
```

Figure 8:157. Receiver Accounting Line Inquiry Table (RCLA)

[20] **Accrual Amount**. Displays the accrued amount of this receiver line, reflecting all adjustments made to the original amount.

[21] **Vouchered Amount**. Displays the total amount paid to date. This field is updated by the payment documents.

[22] **Closed Amount**. Displays the total amount of the order which has been closed. This amount is the sum of the closed order line amounts, even if the expended amount was more or less than the ordered amount. This field is updated by the payment documents.

After viewing the data, you have several options, as described below:

- To view another record, repeat the above process.
- To view another table, key in ***N*** at the Action field and the applicable table ID at the TableID field, then press [Enter].
- To access a document screen, key in ***L*** at the Action field and the applicable document transaction code at the Table ID field. Use the [Space Bar] to erase the remaining 2 characters, then press [Enter].
- To exit the system, follow the sign-off instructions under **Part 2, Accessing The System**.

Checks Awaiting Replacement Inquiry Table (REPL)

The REPL is used to view:

- All checks canceled for replacement that have not yet been replaced through the Automated Disbursements process.
- The check number, payee's name, and the amount of the check.

To access the REPL, at the FFS screen, key in ***N*** at the Action field and ***REPL*** at the TableID field, then press [Enter]. The REPL screen (**Figure 8:158**) is displayed with an ***S*** in the Action field.

Displaying A Record. For instructions on displaying a record, see **Part 2, Using Tables**.

The fields on the REPL are listed below with an explanation of each:

[1] **Action**. Displays ***S***.

[2] **TableID.** Displays ***REPL***.

[3] **UserID.** Displays the user ID.

[4] **Check Number** 🔑. Displays the check number of the canceled check.

[5] **D.O.** 🔑**.** Displays the code number of the Treasury disbursing office of the canceled check.

[6] **Rej.** Displays the replacement payments that did not complete the disbursements process because of error. If the payment rejected, this field is ***Y***. If the payment did not reject from disbursements or is ready to be submitted to disbursements, this field is ***N***. This field is updated by the Schedule Posting process and direct entry to this table.

[7] **Vendor Name.** Displays the payee name for the canceled check.

[8] **Check Amount.** Displays the amount of the canceled check.

After viewing the data, you have several options, as described below:

- To view another record, repeat the above process.
- To view another table, key in ***N*** at the Action field and the applicable table ID at the TableID field, then press [Enter].
- To access a document screen, key in ***L*** at the Action field and the applicable document transaction code at the TableID field. Use the [Space Bar] to erase the remaining 2 characters, then press [Enter].
- To exit the system, follow the sign-off instructions under **Part 2, Accessing The System**.

```
ACTION: S [1]  TABLEID: REPL [2]  USERID: NFxx [3]
              *** CHECKS AWAITING REPLACEMENT INQUIRY TABLE ***
KEY IS CHECK NUMBER, D.O.

     CHECK
     NUMBER    D.O.  REJ          VENDOR NAME              CHECK AMOUNT
    --------  ----  ---  ----------------------------  -------------------
01-  [4]       [5]  [6]            [7]                        [8]
02-
03-
04-
05-
06-
07-
08-
09-
10-
11-
12-
13-
14-
```

Figure 8:158. Checks Awaiting Replacement Inquiry Table (REPL)

Requisition Header Inquiry Table (REQH)

The REQH is used to view information about open and recently closed requisitions, such as: vendor and delivery date.

To access the REQH, at the FFS screen, key in ***N*** at the Action field and ***REQH*** at the TableID field, then press [Enter]. The REQH screen (**Figure 8:159**) is displayed with an ***S*** in the Action field.

Displaying A Record. For instructions on displaying a record, see **Part 2, Using Tables**.

The fields on the REQH are listed below with an explanation of each:

[1] **Action.** Displays ***S***.

[2] **TableID.** Displays ***REQH***.

[3] **UserID.** Displays the user ID.

Note: Fields [4] through [32] are updated with information from requisition document headers, unless otherwise stated.

[4] **Trans Code** 🔑. Displays the code that identifies this requisition either as one that included commodity lines or one that did not include commodity lines.

[5] **Req No** 🔑. Displays the document number assigned to this requisition.

[6] **Priority**. Displays the priority assigned to this requisition.

[7] **Date**. Displays the date the requisition was entered.

[8] **Trans Type**. Displays the accounting model used for this requisition. The codes for these models are defined in the ACED.

[9] **Doc Type**. Displays the document type.

[10] **Buyer**. Displays the purchasing buyer responsible for this requisition.

[11] **Vendor Code**. Displays the code of the vendor who receives this requisition.

[12] **Requested By**. Displays the person making the request for these goods or services.

[13] **Name**. Displays the name of the vendor that matches the vendor code.

[14] **Phone**. Displays the phone number of the vendor that matches the vendor code.

[15] **Address**. Displays the address of the vendor that matches the vendor code.

[16] **Reqd Del Date**. Displays the date by which the goods requisitioned must be delivered to the requesting department.

[17] **Del Bldg/Rm**. Displays the building and room to which the goods are to be delivered.

[18] **Resp Pers**. Displays the person to whom questions about the requisition should be addressed.

[19] **Contact**. Displays the name of the contact person that matches the vendor code.

[20] **Whse Code**. Displays to identify the warehouse to which the items requisitioned should be shipped.

[21] **Phone**. Displays the requester's phone number.

```
ACTION: S [1]    TABLEID: REQH [2]    USERID: NFxx [3]
              *** REQUISITION HEADER INQUIRY TABLE ***
KEY IS TRANS CODE, REQ NO

TRANS CODE: [4]       REQ NO: [5]        PRIORITY: [6]  DATE: [7]
TRANS TYPE: [8]    DOC TYPE: [9]         BUYER: [10]

VENDOR CODE: [11]                      REQUESTED BY: [12]
       NAME: [13]                             PHONE: [14]
    ADDRESS: [15]                   REQD DEL DATE: [16]
                                     DEL BLDG/RM:  [17]
                                       RESP PERS:  [18]
    CONTACT: [19]                        WHSE CODE: [20]
      PHONE: [21]                 LIQUIDATING TYPE: [22]
                                        REQ AMOUNT: [23]
   COMMENTS: [24]                    CLOSED AMOUNT: [25]
   LAST PRINT DATE: [26]               CLOSED DATE: [27]
   LAST CHG STATUS: [28]                  PRINT RQ: [29]
     TOTAL COMM LINES: [30]      FINAL COMM LINES: [31]
             BLANKET #: [32]
```

Figure 8:159. Requisition Header Inquiry Table (REQH)

22 **Liquidating Type**. Displays one of the following types of document that referenced this requisition:

O = Obligation
A = Accrual
E = Expenditure

23 **Req Amount.** Displays the current amount of this requisition, reflecting all adjustments to the original amount.

24 **Comments**. Displays comments associated with this requisition.

25 **Closed Amount**. Displays the total amount of the order which has been closed. This amount is the sum of the closed order line amounts, even if the expended amount was more or less than the ordered amount. This field is updated by the payment documents.

26 **Last Print Date**. Displays the date this requisition was last printed.

27 **Closed Date**. Displays the date when all accounting lines were closed on this requisition.

28 **Last Chg Status**. Displays one of the following to indicate whether or not the requisition appears as changed when it is printed:

C = The requisition appears as changed.

A = The requisition appears as changed only on reprints.

Blank = The requisition does not appear as changed. If the requisition is printed online with the override parameter set to ***Y***, then this field is set to spaces before the order is printed.

29 **Print RQ**. Displays one of the following:

Y = Print this requisition
N = Not to print this requisition

30 **Total Comm Lines**. Displays the number of commodity lines on the requisition.

31 **Final Comm Lines**. Displays the number of commodity lines that have been marked cleared as a result of final receipt and acceptance of goods.

32 **Blanket #**. Displays the blanket agreement between the institution and the vendor that governs the terms of this requisition.

After viewing the data, you have several options, as described below:

- To view another record, repeat the above process.

- To view another table, key in ***N*** at the Action field and the applicable table ID at the TableID field, then press [Enter].

- To access a document screen, key in ***L*** at the Action field and the applicable document transaction code at the Table ID field. Use the [Space Bar] to erase the remaining 2 characters, then press [Enter].

- To exit the system, follow the sign-off instructions under **Part 2, Accessing The System**.

Requisition Accounting Line Inquiry Table (REQL)

The REQL is used to view information about outstanding and recently closed requisitions. This table displays information about original amounts, as well as, obligated amounts for each requisition.

To access the REQL, at the FFS screen, key in ***N*** at the Action field and ***REQL*** at the TableID field, then press [Enter]. The REQL screen (**Figure 8:160**) is displayed with an ***S*** in the Action field.

Displaying A Record. For instructions on displaying a record, see **Part 2, Using Tables**.

The fields on the REQL are listed below with an explanation of each:

[1] **Action.** Displays ***S***.

[2] **TableID.** Displays ***REQL***.

[3] **UserID.** Displays the user ID.

Note: Fields [4] through [20] are updated with information from requisition document lines, unless otherwise stated.

[4] **Trans Code** 🔑. Displays the code that identifies this requisition either as one that included commodity lines or one that did not include commodity lines.

[5] **Req No** 🔑. Displays the document number assigned to this requisition.

[6] **Line No** 🔑. Displays the number of the accounting line on the requisition.

[7] **BFY**. Displays budget fiscal year as part of the accounting distribution for this requisition.

[8] **Fund**. Displays the fund code as part of the accounting distribution for this requisition.

[9] **Division**. Displays the division code as part of the accounting distribution for this requisition.

[10] **Budget Org**. Displays budget organization as part of the accounting distribution for this requisition.

[11] **Pgm**. Displays the program code as part of the accounting distribution for this requisition.

[12] **Line Amt**. Displays the total amount of this accounting line.

[13] **Cost Org**. Displays cost organization code as part of the accounting distribution for this requisition.

[14] **Job No**. Displays the job number as part of the accounting distribution for this requisition.

[15] **Closed Amt**. Displays the total amount of the requisition which has been closed. This amount is the sum of the closed requisition line amounts, even if the ordered amount was more or less than the requisition amount. This field is updated by the purchase order, receiver, and payment documents.

[16] **BOC**. Displays the budget object code as part of the accounting distribution for this requisition.

[17] **Rptg**. Displays the reporting code as part of the accounting distribution for this requisition.

[18] **Oblg Amt**. Displays the total amount obligated, accrued, or expended against this requisition.

```
ACTION: S [1] TABLEID: REQL [2] USERID: NFxx [3]
          *** REQUISITION ACCOUNTING LINE INQUIRY TABLE ***
KEY IS TRANS CODE, REQ NO, LINE NO

TRANS CODE: [4]        REQ NO: [5]

01- LINE NO:[6]  BFY: [7]        FUND: [8]       DIVISION: [9]
          BUDGET ORG: [10]         PGM: [11]      LINE AMT: [12]
            COST ORG: [13]      JOB NO: [14]   CLOSED AMT: [15]
                 BOC: [16]        RPTG: [17]     OBLG AMT: [18]
     LAST CHG STATUS: [19] DESCRIPTION: [20]
02- LINE NO:     BFY:            FUND:           DIVISION:
          BUDGET ORG:             PGM:          LINE AMT:
            COST ORG:          JOB NO:       CLOSED AMT:
                 BOC:            RPTG:         OBLG AMT:
     LAST CHG STATUS:     DESCRIPTION:
03- LINE NO:     BFY:            FUND:           DIVISION:
          BUDGET ORG:             PGM:          LINE AMT:
            COST ORG:          JOB NO:       CLOSED AMT:
                 BOC:            RPTG:         OBLG AMT:
     LAST CHG STATUS:     DESCRIPTION:
```

Figure 8:160. Requisition Accounting Line Inquiry Table (REQL)

19 **Last Chg Status**. Displays one of the following to indicate whether or not the requisition appears as changed when it is printed:

C	=	The requisition appears as changed.
A	=	The requisition appears as changed only on reprints.
Blank	=	The requisition does not appear as changed. If the requisition is printed online with the override parameter set to ***Y***, then this field is set to spaces before the order is printed.

20 **Description**. Displays a description of the accounting line.

After viewing the data, you have several options, as described below:

- To view another record, repeat the above process.
- To view another table, key in ***N*** at the Action field and the applicable table ID at the TableID field, then press [Enter].
- To access a document screen, key in ***L*** at the Action field and the applicable document transaction code at the Table ID field. Use the [Space Bar] to erase the remaining 2 characters, then press [Enter].
- To exit the system, follow the sign-off instructions under **Part 2, Accessing The System**.

Reprogramming Header Inquiry Table (RPGH)

The RPGH is used to view information about reprogrammings and the justifications for the reprogrammings.

To access the RPGH, at the FFS screen, key in ***N*** at the Action field and ***RPGH*** at the TableID field, then press [Enter]. The RPGH screen (**Figure 8:161**) is displayed with an ***S*** in the Action field.

Displaying A Record. For instructions on displaying a record, see **Part 2, Using Tables**.

The fields on the RPGH are listed below with an explanation of each:

[1] **Action.** Displays ***S***.

[2] **TableID.** Displays ***RPGH***.

[3] **UserID.** Displays the user ID.

[4] **Document ID** 🔑. Displays the RP ID used for this reprogramming.

[5] **Submitting Div**. Displays the submitting division code used when the document was entered.

[6] **Trans Date**. Displays the transaction date.

[7] **Acctg Prd**. Displays the accounting period the reprogramming transaction is posted.

[8] **High-Level**. Displays one of the following High Level Transfer codes:

- ***Y*** = Higher level budgets were affected from the base budget entries entered in the lines of this document.
- ***N*** = The base level entries entered in the lines affected only their respective budgets.
- ***A*** = Transfers are made between different funds that share the same Treasury symbol. All higher budget levels are affected.

[9] **From Budget FYs.** Displays the BFY code used in the header portion of the reprogramming document as a default for the line.

[10] **From Fund.** Displays the fund code used in the header portion of the reprogramming document as a default for the line.

[11] **From Div.** Displays the division code used in the header portion of the reprogramming document as a default for the line.

[12] **From Org.** Displays the organization code used in the header portion of the reprogramming document as a default for the line.

[13] **From Prog.** Displays the program code used in the header portion of the reprogramming document as a default for the line.

[14] **To Budget FYs.** Displays the BFY code used in the header portion of the reprogramming document as a default for the line.

[15] **To Fund.** Displays the fund code used in the header portion of the reprogramming document as a default for the line.

```
ACTION:S [1]  TABLEID:RPGH [2]  USERID:NFxx [3]
                  *** REPROGRAMMING HEADER INQUIRY TABLE ***
  KEY IS DOCUMENT ID

   DOCUMENT ID: [4]                SUBMITTING DIV: [5]
    TRANS DATE: [6]                     ACCTG PRD: [7]        HIGH LEVEL: [8]

  FROM-- BUDGET FYS [9]   FUND: [10]    DIV: [11]   ORG: [12]    PROG: [13]
    TO-- BUDGET FYS [14]  FUND: [15]    DIV: [16]   ORG: [17]    PROG: [18]

    PURPOSE/STIPULATION: [19]
```

Figure 8:161. Reprogramming Header Inquiry Table (RPGH)

16 **To Div.** Displays the division code used in the header portion of the reprogramming document as a default for the line.

17 **To Org.** Displays the organization code used in the header portion of the reprogramming document as a default for the line.

18 **To Prog.** Displays the program code used in the header portion of the reprogramming document as a default for the line.

19 **Purpose/Stipulation**. Displays the justification for the reprogramming action.

After viewing the data, you have several options, as described below:

- To view another record, repeat the above process.
- To view another table, key in ***N*** at the Action field and the applicable table ID at the TableID field, then press [Enter].
- To access a document screen, key in ***L*** at the Action field and the applicable document transaction code at the TableID field. Use the [Space Bar] to erase the remaining 2 characters, then press [Enter].
- To exit the system, follow the sign-off instructions under **Part 2, Accessing The System**.

Reprogramming Line Inquiry Table (RPGL)

The RPGL is used to view:

- Accounting information about reprogramming *to* and *from* a budget.
- Reprogramming amount and type of resource that was reprogrammed.

To access the RPGL, at the FFS screen, key in ***N*** at the Action field and ***RPGL*** at the TableID field, then press [Enter]. The RPGL screen (**Figure 8:162**) is displayed with an ***S*** in the Action field.

Displaying A Record. For instructions on displaying a record, see **Part 2, Using Tables**.

The fields on the RPGL are listed below with an explanation of each:

1 **Action.** Displays ***S***.

2 **TableID.** Displays ***RPGL***.

3 **UserID.** Displays the user ID.

4 **Document ID** 🔑. Displays the RP ID used for the reprogramming.

5 **Submitting Div**. Displays the submitting division code used when the document was entered.

6 **High-Level**. Displays one of the following High Level Transfer codes:

- ***Y*** = Higher level budgets were affected from the base budget entries entered in the lines of this document.
- ***N*** = The base level entries entered in the lines of this RP affected only their respective budgets.
- ***A*** = Transfer was made between different funds that have the same Treasury symbol.

7 **Line No** 🔑. Displays the number representing the sequential position of the line within this reprogramming document.

8 **To/From**. Displays the code that indicates if resources were reprogrammed to or from the budget described in this line.

9 **BFYs.** Displays the BFY code affected by the reprogramming.

10 **Fund**. Displays the fund code affected by the reprogramming.

11 **Div**. Displays the division code entered in the document line.

12 **Org.** Displays the organization code entered in the document line.

13 **Program**. Displays the program code entered in the document line.

14 **BOC**. Displays the budget object code entered in the document line.

15 **Qtr**. Displays the limiting fiscal quarter entered in the document line.

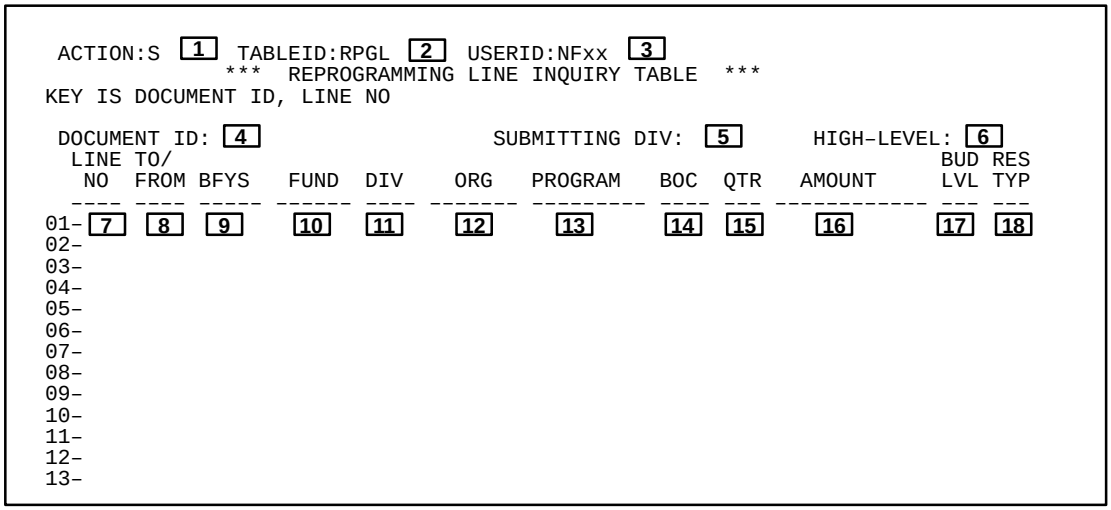

Figure 8:162. Reprogramming Line Inquiry Table (RPGL)

16 **Amount**. Displays the FTE count or dollar amount entered in and reprogrammed by the document line.

17 **Bud Lvl**. Displays one of the following codes to define the budget level to or from which resources were reprogrammed:

AA = Appropriation/Apportionment
AC = Allocation
SL = Suballocation
AL = Allotment
SA = Suballotment

18 **Res Typ.** Displays one of the following codes to define the type of resource that was reprogrammed in the RP line:

Y = Year-to-date posted dollars
A = Approved dollars
P = Pending dollars
F = FTEs

After viewing the data, you have several options, as described below:

- To view another record, repeat the above process.

- To view another table, key in ***N*** at the Action field and the applicable table ID at the TableID field, then press [Enter].

- To access a document screen, key in ***L*** at the Action field and the applicable document transaction code at the TableID field. Use the [Space Bar] to erase the remaining 2 characters, then press [Enter].

- To exit the system, follow the sign-off instructions under **Part 2, Accessing The System**.

Requisition Status Inquiry Table (RQST)

The RQST is used to view information about the status of each line of a requisition.

To access the RQST, at the FFS screen, key in ***N*** at the Action field and ***RQST*** at the TableID field, then press [Enter]. The RQST screen (**Figure 8:163**) is displayed with an ***S*** in the Action field.

Displaying A Record. For instructions on displaying a record, see **Part 2, Using Tables**.

The fields on the RQST are listed below with an explanation of each:

[1] **Action.** Displays ***S***.

[2] **TableID.** Displays ***RQST***.

[3] **UserID.** Displays the user ID.

Note: Fields [4] through [10] are updated with information from requisition headers, unless otherwise stated.

[4] **RQ ID** 🔑. Displays the transaction code and unique number of the document.

[5] **Line No** 🔑. Displays the line number of the requisition.

[6] **Status**. Displays one of the following codes to define the status of the requisition:

ACC	=	Requisition has been accepted
POW	=	Purchase order has been partially written against this commodity line
MOD	=	Requisition commodity line has been changed
CAN	=	Requisition has been changed

This field is updated by the requisition and purchase order documents.

[7] **Date**. Displays the date the requisition document was accepted by the system.

[8] **Commodity Code**. Displays the code identifying the item being requisitioned. These codes are defined in the COMM.

[9] **Description**. Displays comments about the items requested. The system also inserts the purchase order number on the status of POW.

[10] **Vendor**. Displays the code of the vendor who supplies the item. These codes are defined in the VEND.

After viewing the data, you have several options, as described below:

- To view another record, repeat the above process.
- To view another table, key in ***N*** at the Action field and the applicable table ID at the TableID field, then press [Enter].
- To access a document screen, key in ***L*** at the Action field and the applicable document transaction code at the Table ID field. Use the [Space Bar] to erase the remaining 2 characters, then press [Enter].
- To exit the system, follow the sign-off instructions under **Part 2, Accessing The System**.

```
ACTION: S [1]  TABLEID: RQST [2]  USERID: NFxx [3]
                *** REQUISITION STATUS INQUIRY TABLE ***
KEY IS RQ ID, LINE NO

RQ ID: [4]                LINE NO: [5]

                    COMMODITY
    STATUS   DATE       CODE                    DESCRIPTION          VENDOR
    ------ -------- --------------  ------------------------------ ------------
01-  [6]     [7]        [8]                       [9]                 [10]
02-
03-
04-
05-
06-
07-
08-
09-
10-
11-
12-
```

Figure 8:163. Requisition Status Inquiry Table (RQST)

Self-Reversing Journal Voucher Inquiry Table (RVJV)

The RVJV is used to view the reversing JVs and SVs.

To access the RVJV, at the FFS screen, key in ***N*** at the Action field and ***RVJV*** at the TableID field, then press [Enter]. The RVJV screen (**Figure 8:164**) is displayed with an ***S*** in the Action field.

Displaying A Record. For instructions on displaying a record, see **Part 2, Using Tables**.

The fields on the RVJV are listed below with an explanation of each:

[1] **Action.** Displays ***S***.

[2] **TableID.** Displays ***RVJV***.

[3] **UserID.** Displays the user ID.

Note: Fields [4] through [8] are updated from the SV.

[4] **Reversal Period** 🔑**.** Displays the accounting period entered as the reversal period in the General Ledger document that is to be reversed.

[5] **Trans Code** 🔑**.** Displays the transaction code with a transaction category of SV that is reversed.

[6] **Number** 🔑**.** Displays the document number that is reversed. The document lines are in the JVLT.

[7] **Division.** Displays the division code for the reverse voucher as entered in the General Ledger document.

[8] **Budget Override Ind.** Displays the value of the budget override indicator from the document.

After viewing the data, you have several options, as described below:

- To view another record, repeat the above process.
- To view another table, key in ***N*** at the Action field and the applicable table ID at the TableID field, then press [Enter].
- To access a document screen, key in ***L*** at the Action field and the applicable document transaction code at the TableID field. Use the [Space Bar] to erase the remaining 2 characters, then press [Enter].
- To exit the system, follow the sign-off instructions under **Part 2, Accessing The System**.

```
ACTION: S [1]   TABLEID:RVJV [2]   USERID: NFxx [3]
          *** SELF-REVERSING JOURNAL VOUCHER INQUIRY TABLE ***
KEY IS REVERSAL PERIOD, TRANS CODE, NUMBER

    REVERSAL PERIOD  TRANS CODE    NUMBER     DIVISION   BUDGET OVERRIDE IND
    ---------------  ----------  -----------  ---------  -------------------
01-       [4]            [5]         [6]         [7]            [8]
02-
03-
04-
05-
06-
07-
08-
09-
10-
11-
12-
13-
14-
15-
```

Figure 8:164. Self-Reversing Journal Voucher Inquiry Table (RVJV)

Suballotment Forward Reference Inquiry Table (SAFR)

The SAFR is used to view the forward references for each parent allotment and suballotment.

To access the SAFR, at the FFS screen, key in ***N*** at the Action field and ***SAFR*** at the TableID field, then press [Enter]. The SAFR screen (**Figure 8:165**) is displayed with an ***S*** in the Action field.

Displaying A Record. For instructions on displaying a record, see **Part 2, Using Tables**.

The fields on the SAFR are listed below with an explanation of each:

[1] **Action.** Displays ***S***.

[2] **TableID.** Displays ***SAFR***.

[3] **UserID.** Displays the user ID.

Note: Fields [4] through [14] are updated by the SA and the BE, unless otherwise stated.

[4] **BFY.** Displays the budget fiscal years of the appropriation.

[5] **Fund.** Displays the fund of the parent allotment or suballotment.

[6] **Division.** Displays the division of the parent allotment or suballotment.

[7] **Org.** Displays the organization of the parent allotment or suballotment.

[8] **Pgm.** Displays the program of the parent allotment or suballotment.

[9] **BOC.** Displays the BOC of the parent allotment or suballotment.

Note: Fields [10] through [14] relate to suballotment data.

[10] **Organization**. Displays the organization accounting distribution of the *child* suballotments.

[11] **Program**. Displays the program accounting distribution of the *child* suballotments.

[12] **BOC**. Displays the BOC accounting distribution of the *child* suballotments.

[13] **Total Amount**. Displays the total amounts suballotted.

[14] **Available Amt**. Displays the amount of the suballotment available for spending.

After viewing the data, you have several options, as described below:

- To view another record, repeat the above process.
- To view another table, key in ***N*** at the Action field and the applicable table ID at the TableID field, then press [Enter].
- To access a document screen, key in ***L*** at the Action field and the applicable document transaction code at the TableID field. Use the [Space Bar] to erase the remaining 2 characters, then press [Enter].
- To exit the system, follow the sign-off instructions under **Part 2, Accessing The System**.

```
 ACTION: S [1]  TABLEID: SAFR [2]    USERID: NFxx [3]
          *** SUBALLOTMENT FORWARD REFERENCE INQUIRY TABLE ***
KEY IS ALL

BFY: [4]   FUND: [5]   DIVISION: [6] ORG: [7]     PGM: [8]      BOC: [9]

  ------------------------------SUBALLOTMENT---------------------------------
   ORGANIZATION   PROGRAM   BOC       TOTAL AMOUNT          AVAILABLE AMT
   ------------  ---------  ----   -------------------   -------------------
01-    [10]          [11]     [12]          [13]                [14]
02-
03-
04-
05-
06-
07-
08-
09-
10-
11-
12-
```

Figure 8:165. Suballotment Forward Reference Inquiry Table (SAFR)

Suballotment Inquiry Table (SAIN)

The SAIN is used to view:

- One entry for each suballotment, with level indicators showing where each suballotment exists in the suballotment hierarchy.
- Committed, obligated, and expended amounts for each suballotment.
- Amounts that are further suballoted in the lower suballotment levels.

Note: This inquiry table is updated by an overnight, offline program, which uses the Suballotment Spending Control Inquiry Table (SASP) and the Suballotment Forward Reference Inquiry Table (SAFR) as input. To find up-to-the-minute suballotment available amount, use SASP.

To access the SAIN, at the FFS screen, key in ***N*** at the Action field and ***SAIN*** at the TableID field, then press [Enter]. The SAIN screen (**Figure 8:166**) is displayed with an ***S*** in the Action field.

Displaying A Record. For instructions on displaying a record, see **Part 2, Using Tables**.

The fields on the SAIN are listed below with an explanation of each:

[1] **Action.** Displays ***S***.

[2] **TableID.** Displays ***SAFR***.

[3] **UserID.** Displays the user ID.

Note: Fields [4] through [23] are updated by the Budget Execution Suballotment Inquiry Builder Offline Batch Process.

[4] **Lvl.** Displays the level of this suballotment in a tree-style hierarchy of suballotments.

[5] **BFY.** Displays the budget fiscal year accounting distribution code of the suballotment.

[6] **Fund.** Displays the fund accounting distribution code of the suballotment.

[7] **Div.** Displays the division accounting distribution code of the suballotment.

[8] **Org.** Displays the organization accounting distribution code of the suballotment.

[9] **Pgm.** Displays the program accounting distribution code of the suballotment.

[10] **BOC.** Displays the budget object code accounting distribution code of the suballotment.

[11] **Tr Type.** Displays the organization accounting distribution of the *child* suballotments.

[12] **Status Ind** . Displays the BOC accounting distribution of the *child* suballotments.

[13] **Total Suballot Amt** . Displays the total amount of the suballotment. Includes all amounts suballotted under this suballotment.

[14] **YTD Unliq Comm Amt**. Displays the total of all outstanding (open) requisitions against this suballotment. Includes outstanding amounts against suballotments under this suballotment.

[15] **Expended Amt**. Displays the total of all payables and direct disbursements against this suballotment. Includes outstanding amounts against suballotments under this suballotment.

[16] **YTD Unliq Oblg Amt**. Displays the total of all outstanding (open) orders against this suballotment. Includes outstanding amount against suballotments under this suballotment

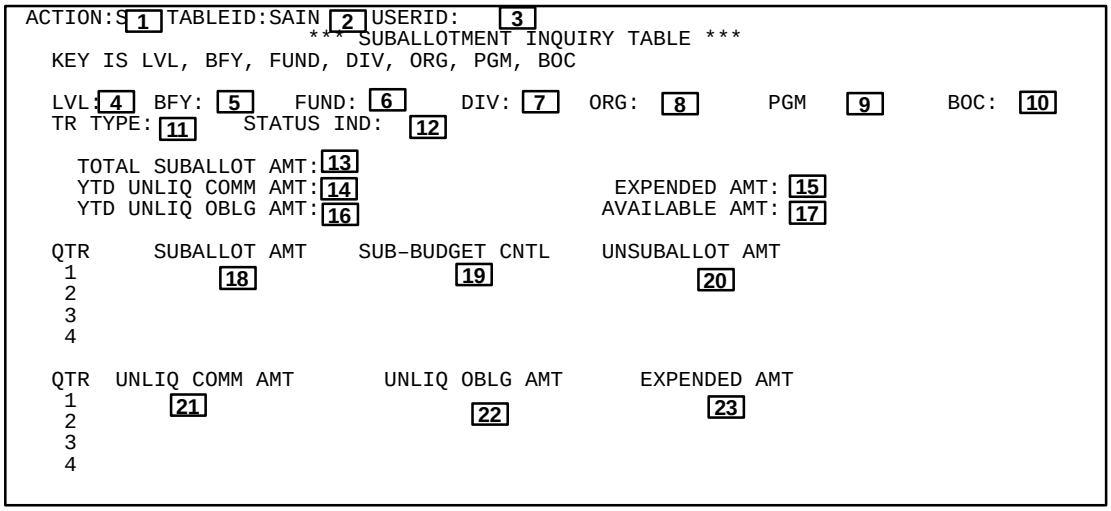

Figure 8:166. Suballotment Inquiry Table (SAIN)

17 **Available Amt**. Displays the amount for obligations and expenditures against this suballotment.

18 **Suballot Amt**. Displays the total suballotment amounts for all quarters.

19 **Sub-Budget Cntl**. Displays the amount under this suballotment.

20 **Unsuballot Amt**. Displays the suballotment amount minus the sub-budget amount.

21 **Unliq Comm Amt**. Displays the unliquidated commitment amount by quarter.

22 **Unliq Oblg Amt**. Displays the unliquidated obligation amount by quarter.

23 **Expended Amt**. Displays the expended amount by quarter.

After viewing the data, you have several options, as described below:

- To view another record, repeat the above process.
- To view another table, key in ***N*** at the Action field and the applicable table ID at the TableID field, then press [Enter].
- To access a document screen, key in ***L*** at the Action field and the applicable document transaction code at the TableID field. Use the [Space Bar] to erase the remaining 2 characters, then press [Enter].
- To exit the system, follow the sign-off instructions under **Part 2, Accessing The System**.

Suballotment Options Inquiry Table (SAOP)

The SAOP is used to view one entry for each allotment identifying the various options selected for its suballotments.

To access the SAOP, at the FFS screen, key in ***N*** at the Action field and ***SAOP*** at the TableID field, then press [Enter]. The SAOP screen (**Figure 8:167**) is displayed with an ***S*** in the Action field.

Displaying A Record. For instructions on displaying a record, see **Part 2, Using Tables**.

The fields on the SAOP are listed below with an explanation of each:

1 **Action.** Displays ***S***.

2 **TableID.** Displays ***SAOP***.

3 **UserID.** Displays the user ID.

Note: Fields 4 through 16 are updated by the BE, unless otherwise stated.

4 **BFY.** Displays the budget fiscal year entered for this allotment.

5 **Fund.** Displays the fund code entered for this allotment.

6 **Division.** Displays the division code entered for this allotment.

7 **Org.** Displays the organization code entered for this allotment.

8 **Pgm.** Displays the program code entered for this allotment.

9 **BOC.** Displays the BOC code entered for this allotment.

Note: Fields 10 through 13 relate to suballotment options.

10 **Organization.** Displays the organization suballotment option entered for this allotment.

11 **Program.** Displays the program suballotment option entered for this allotment.

12 **BOC.** Displays the budget object class suballotment option entered for this allotment.

13 **Spending Controls.** Displays the spending controls suballotment option entered for this allotment.

14 **Aprv Allot Amt**. Displays the quarterly amounts of the allotment that are approved. This field is updated by the BE.

15 **Suballot Amt**. Displays the quarterly amounts suballotted from this allotment. This field is updated by the the SA.

16 **Unsuballot Amt.** Displays the quarterly amounts not suballotted for this allotment. This amount is:

Apprv Allot Amt–Suballot Amt.

This field is calculated by FFIS.

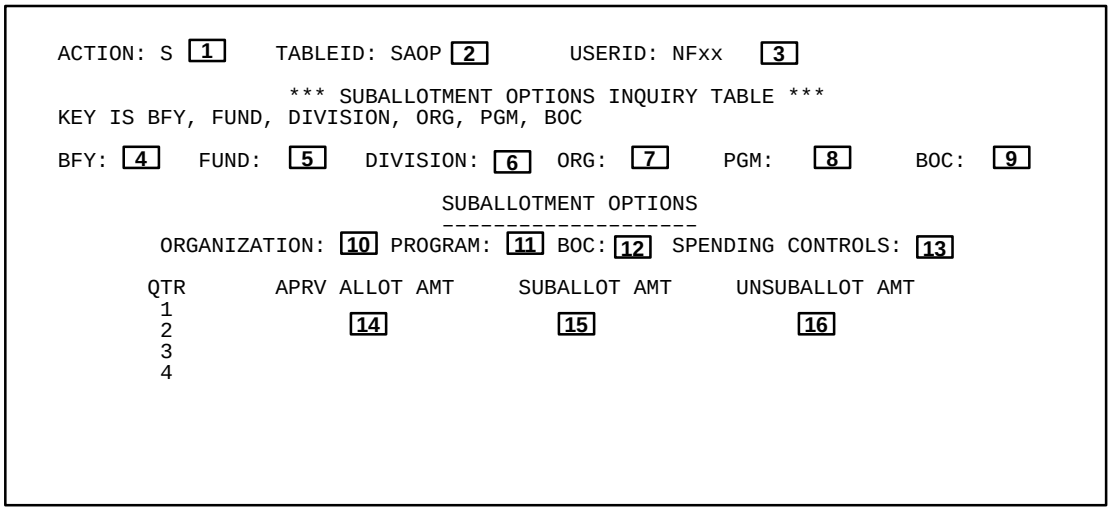

Figure 8:167. Suballotment Options Inquiry Table (SAOP)

After viewing the data, you have several options, as described below:

- To view another record, repeat the above process.

- To view another table, key in ***N*** at the Action field and the applicable table ID at the TableID field, then press [Enter].

- To access a document screen, key in ***L*** at the Action field and the applicable document transaction code at the TableID field. Use the [Space Bar] to erase the remaining 2 characters, then press [Enter].

- To exit the system, follow the sign-off instructions under **Part 2, Accessing The System**.

Suballotment Spending Control Inquiry Table (SASP)

The SASP is used to view:

- Information about the suballotment spending control edits.
- Entries for each suballotment with no reference to suballotment hierarchies.

To access the SASP, at the FFS screen, key in ***N*** at the Action field and ***SASP*** at the TableID field, then press [Enter]. The SASP screen (**Figure 8:168**) is displayed with an ***S*** in the Action field.

Displaying A Record. For instructions on displaying a record, see **Part 2, Using Tables**.

The fields on the SASP are listed below with an explanation of each:

[1] **Action**. Displays ***S***.

[2] **TableID.** Displays ***SASP***.

[3] **UserID.** Displays the user ID.

Note: Fields [4] through [27] are updated by the BE and the SA, unless otherwise stated.

[4] **BFYs** 🔑**.** Displays the budget fiscal year(s) suballotment budgetary accounting distribution.

[5] **Fund** 🔑**.** Displays the fund suballotment budgetary accounting distribution.

[6] **Division** 🔑**.** Displays the division suballotment budgetary accounting distribution.

[7] **Org** 🔑**.** Displays the organization suballotment budgetary accounting distribution.

[8] **Pgm** 🔑**.** Displays the program suballotment budgetary accounting distribution.

[9] **BOC** 🔑**.** Displays the budget object class suballotment budgetary accounting distribution.

[10] **Trans Code/Type.** Displays the suballotment transaction code and type. Defines the type of accounting event used to post to the ledgers and journals.

[11] **Status Ind.** Displays one of the following:

A = Active suballotment
I = Inactive suballotment

If the Suballotment Control Option in the SAOP is Full Control or Presence Control, no further spending can be made against this appropriation.

[12] **Spending Control Override**. Displays one of the following:

```
ACTION:S [1]  TABLEID:SASP [2]  USERID: NFxx [3]
              *** SUBALLOTMENT SPENDING CONTROL INQUIRY TABLE ***
  KEY IS BFYS, FUND, DIVISION, ORG, PGM, BOC
  BFYS: [4]    FUND:    [5]   DIVISION: [6]  ORG: [7]     PGM: [8]       BOC: [9]
  TRANS CODE / TYPE:  [10]    STATUS IND: [11]     SPENDING CONTROL OVERRIDE: [12]
  TOTAL SUBALLOT AMT: [13]                         TOTAL SUBALLOT FTES: [14]
YTD UNLIQ COMM AMT:   [15]                 EST ACCRUED SUBALLOT FTES:  [16]
YTD UNLIQ OBLG AMT:   [17]                           TOTAL USED FTES:  [18]
     EXPENDED AMT:    [19]
    AVAILABLE AMT:    [20]                 AVAILABLE SUBALLOT FTES:    [21]

QTR  SUBALLOT AMT     UNLIQ COMM AMT      UNLIQ OBLG AMT       EXPENDED AMT
 1      [22]              [23]                [24]                [25]
 2
 3
 4

QTR  SUBALLOT FTES    SUBALLOT FTES USED
 1      [26]                [27]
 2
 3
 4
```

Figure 8:168. Suballotment Spending Control Inquiry Table (SASP)

C = Spending control is enforced at full control. The value entered here overrides the spending control in the FUN2 for this budget line.

P = Spending control is enforced at presence control. The value entered here overrides the spending control in the FUN2 for this budget line.

Blank = Spending is controlled by the suballocation spending controls in the FUN2.

This field is updated by the LSPC, Update Local Spending Control, and Offline Batch Process.

[13] **Total Suballot Amt.** Displays the total amount of the suballotment. Does **not** include any amounts suballotted under this suballotment.

[14] **Total Suballot FTEs**. Displays the total FTEs suballotted. Calculated as:

Suballot FTEs Quarter1 +

Suballot FTEs Quarter2 +

Suballot FTEs Quarter3 +

Suballot FTEs Quarter4

[15] **YTD Unliq Comm Amt.** Displays the year-to-date total of all outstanding (open) requisitions against this suballotment. Does **not** include outstanding amounts against suballotments under this suballotment. This field is updated by requisitions, obligations and payments.

[16] **Est Accrued Suballot FTEs**. Displays the projection of FTEs for the current payroll period for this suballotment.

[17] **YTD Unliq Oblg Amt.** Displays the total of all outstanding (open) orders against this suballotment. Does **not** include outstanding amounts against suballotments under this suballotment. This field is updated by obligations and payments.

[18] **Total Used FTEs**. Displays the total FTEs used plus the projection of FTEs for the current payroll period. Calculated as:

Realized Suballot Quarter1 +

Realized Suballot Quarter2 +

Realized Suballot Quarter3 +

Realized Suballot Quarter4 +

Accrued Suballot FTEs

[19] **Expended Amt.** Displays the total of all payables and direct disbursements against this suballotment. Does **not** include outstanding amounts against suballotments under this suballotment. This field is updated by the payments, billing/cash receipts for expenditure refunds, and disbursements.

[20] **Available Amt.** Displays the amount available for obligations and expenditures against this suballotment.

If the SOPT Commitment Amount Option is **Y**, the available amount is:

Total Suballotment Amount

–(Commitments+Obligations+ Expenditures).

Otherwise, commitments are not included in the calculation. This field is calculated by FFIS.

[21] **Available Suballot FTEs**. Displays the number of FTEs available to be suballotted. Calculated as:

[Suballot FTEs Quarter1 +

Suballot FTEs Quarter2 +

Suballot FTEs Quarter3 +

Suballot FTEs Quarter4] –

[Realized Suballot Quarter1 +

Realized Suballot Quarter2 +

Realized Suballot Quarter3 +

Realized Suballot Quarter4]

[22] **Suballot Amt.** Displays the YTD suballotment amounts by quarter.

[23] **Unliq Comm Amt.** Displays the YTD unliquidated commitment amounts by quarter.

[24] **Unliq Oblg Amt.** Displays the unliquidated obligation amounts by quarter.

[25] **Expended Amt.** Displays the expended amounts by quarter.

[26] **Suballot FTEs**. Displays the FTEs that have been suballotted for each quarter. This figure reflects FTE transfers in and out of the suballotment.

[27] **Suballot FTEs Used**. Displays the FTEs computed from the actual hours for this suballotment for each quarter.

After viewing the data, you have several options, as described below:

- To view another record, repeat the above process.
- To view another table, key in ***N*** at the Action field and the applicable table ID at the TableID field, then press [Enter].

- To access a document screen, key in ***L*** at the Action field and the applicable document transaction code at the TableID field. Use the [Space Bar] to erase the remaining 2 characters, then press [Enter].

- To exit the system, follow the sign-off instructions under **Part 2, Accessing The System**.

Suballotment Structure Inquiry Table (SAST)

The SAST is used to view a line for each suballotment in the system. It represents the backup rollup references of a suballotment hierarchy which are necessary for calculating amount aggregations for the SAIN.

To access the SAST, at the FFS screen, key in ***N*** at the Action field and ***SAST*** at the TableID field, then press [Enter]. The SAST screen (**Figure 8:169**) is displayed with an ***S*** in the Action field.

Displaying A Record. For instructions on displaying a record, see **Part 2, Using Tables**.

The fields on the SAST are listed below with an explanation of each:

[1] **Action.** Displays ***S***.

[2] **TableID.** Displays ***SAST***.

[3] **UserID.** Displays the user ID.

Note: Fields [4] through [11] are updated by the BE and the SA.

[4] **BFY**. Displays the budget fiscal year used in the suballotment budgetary accounting distribution.

[5] **Fund**. Displays the fund code used in the suballotment budgetary accounting distribution.

[6] **Division**. Displays the division code used in the suballotment budgetary accounting distribution.

[7] **Organization**. Displays the organization code used in the suballotment budgetary accounting distribution.

[8] **Program**. Displays the program code used in the suballotment budgetary accounting distribution.

[9] **BOC**. Displays the budget object code used in the suballotment budgetary accounting distribution.

[10] **Level**. Displays the level of this suballotment in a tree-style hierarchy of suballotments.

[11] **Ref Org**. Displays the organization of the parent suballotment or allotment.

After viewing the data, you have several options, as described below:

- To view another record, repeat the above process.
- To view another table, key in ***N*** at the Action field and the applicable table ID at the TableID field, then press [Enter].
- To access a document screen, key in ***L*** at the Action field and the applicable document transaction code at the TableID field. Use the [Space Bar] to erase the remaining 2 characters, then press [Enter].
- To exit the system, follow the sign-off instructions under **Part 2, Accessing The System**.

```
ACTION: S [1]    TABLEID: SAST [2]    USERID: NFxx [3]
                  *** SUBALLOTMENT STRUCTURE INQUIRY TABLE ***
KEY IS  BFY, FUND, DIVISION, ORGANIZATION, PROGRAM, BOC

     BFY    FUND    DIVISION   ORGANIZATION   PROGRAM   BOC   LEVEL   REF ORG
    ----    ----    --------   ------------   -------   ---   -----   -------
01-  [4]     [5]       [6]          [7]          [8]     [9]   [10]     [11]
02-
03-
04-
05-
06-
07-
08-
09-
10-
11-
12-
13-
14-
15-
```

Figure 8:169. Suballotment Structure Inquiry Table (SAST)

Spending Control Document Summary Screen Table (SPDT)

The SPDT is used to view a list of totals from the SPDX at the BOC level.

To access the SPDT, at the FFS screen, key in ***N*** at the Action field and ***SPDT*** at the TableID field, then press [Enter]. The SPDT screen (**Figure 8:170**) is displayed with an ***S*** in the Action field.

Displaying A Record. For instructions on displaying a record, see **Part 2, Using Tables**.

The fields on the SPDT are listed below with an explanation of each:

12 **Action.** Displays ***S***.

13 **TableID.** Displays ***SPDT***.

14 **UserID.** Displays the user ID.

Note: Fields 4 through 13 are updated by requisitions, obligations, payments, disbursements, and SVs.

15 **BFYs**. Displays the budget fiscal years used in the document's budgetary accounting distribution.

16 **Fund.** Displays the fund code used in the document's budgetary accounting distribution.

17 **Division**. Displays the division code used in the document's budgetary accounting distribution.

18 **Org**. Displays the organization code used in the document's budgetary accounting distribution.

19 **Pgm**. Displays the program code used in the document's budgetary accounting distribution.

20 **BOC**. Displays the budget object code used in the document's budgetary accounting distribution.

21 **Net Commitments**. Displays the total of all outstanding (open) requisitions.

22 **Net Obligations**. Displays the total of all outstanding (open) requisitions.

23 **Net Expenditures.** Displays the total of all payables and direct disbursements against this appropriation.

24 **Total Obligations**. Displays the total amount spent (net commitments plus net obligations plus net expenditures).

After viewing the data, you have several options, as described below:

- To view another record, repeat the above process.
- To view another table, key in ***N*** at the Action field and the applicable table ID at the TableID field, then press [Enter].
- To access a document screen, key in ***L*** at the Action field and the applicable document transaction code at the TableID field. Use the [Space Bar] to erase the remaining 2 characters, then press [Enter].
- To exit the system, follow the sign-off instructions under **Part 2, Accessing The System**.

```
ACTION: S [1]   TABLEID: SPDT [2]     USERID: NFxx [3]
                 *** SPENDING CONTROL DOCUMENT SUMMARY SCREEN ***
KEY IS  BFYS, FUND, DIVISION, ORG, PGM, BOC
01-
BFYS: [4]      FUND: [5]      DIVISION: [6]    ORG:[7] PGM: [8]      BOC: [9]
   NET COMMITMENTS: [10]               NET OBLIGATIONS: [11]
  NET EXPENDITURES: [12]              TOTAL OBLIGATIONS: [13]
02-
BFYS:          FUND:          DIVISION:        ORG:    PGM:          BOC:
   NET COMMITMENTS:                    NET OBLIGATIONS:
  NET EXPENDITURES:                   TOTAL OBLIGATIONS:
03-
  BFYS:        FUND:          DIVISION:        ORG:    PGM:          BOC:
   NET COMMITMENTS:                    NET OBLIGATIONS:
  NET EXPENDITURES:                   TOTAL OBLIGATIONS:
04-
 BFYS:         FUND:          DIVISION:        ORG:     PGM:         BOC:
   NET COMMITMENTS:                      NET OBLIGATIONS:
  NET EXPENDITURES:                     TOTAL OBLIGATIONS:
05-
 BFYS:         FUND:          DIVISION:        ORG:     PGM:         BOC:
    NET COMMITMENTS:                      NET OBLIGATIONS:
    NET EXPENDITURES:                    TOTAL OBLIGATIONS:
```

Figure 8:170. Spending Control Document Summary Screen Table (SPDT)

Travel Advance Inquiry Table (TADV)

The TADV is used to view a list of travel advance activity for each employee by travel type.

To access the TADV, at the FFS screen, key in ***N*** at the Action field and ***TADV*** at the TableID field, then press [Enter]. The TADV screen (**Figure 8:171**) is displayed with an ***S*** in the Action field.

Displaying A Record. For instructions on displaying a record, see **Part 2, Using Tables**.

The fields on the TADV are listed below with an explanation of each:

1 **Action.** Displays ***S***.

2 **TableID.** Displays ***TADV***.

3 **UserID.** Displays the user ID.

4 **Employee Code**. Displays the identification code of the employee who received this travel advance.

5 **Travel Type.** Displays the type of travel for this advance.

6 **Employee Name**. Displays the name of the employee who received this travel advance.

7 **Prev Summed Bal**. Displays the beginning balance for the advance. Whenever the advance records are archived, this field is updated by the travel advance clearing offline process to reflect all activity that is removed from this table.

8 **Last Activity Date**. Displays the appropriate date of the last transaction that updated this travel advance. This date is used to calculate the age of an unobligated travel advance.

9 **Current Balance**. Displays the current total balance for all travel advances recorded for this employee and travel type.

10 **Travel Order**. Displays the document identification code for the travel order that authorized this advance. This field is blank for unobligated travel.

11 **Advance Number**. Displays the number that identified the advance. This is used by the travel order to distinguish modification from original entry advance issuances.

12 **Document ID**. Displays the document identification code for this advance request or application.

13 **Line**. Displays the line number of the document that references this advance. This field is blank for a travel order.

14 **Date**. Displays the date of the travel advance request or application.

15 **Transaction Amount**. Displays the dollar amount of the travel advance document.

16 **Travel Order Balance**. Displays the remaining advance balance (if any) for the travel order. This field displays only the last advance line that references a given travel order. This field is updated by FFIS.

```
 ACTION: S [1]   TABLEID: TADV [2] USERID: NFxx [3]
                    *** TRAVEL ADVANCE INQUIRY TABLE ***
KEY IS EMPLOYEE CODE, TRAVEL TYPE, TRAVEL ORDER, ADVANCE NUMBER, DOCUMENT ID
EMPLOYEE CODE:      [4]                          TRAVEL TYPE:    [5]
EMPLOYEE NAME:      [6]
PREV SUMMED BAL:    [7]                          LAST ACTIVITY DATE:    [8]
CURRENT BALANCE:    [9]

              ADVANCE                                  TRANSACTION   TRAVEL ORDER
TRAVEL ORDER  NUMBER  DOCUMENT ID/LINE    DATE          AMOUNT         BALANCE
-------------- ------ ------------------ -------- --------------- --------------
      [10]      [11]      [12]      [13]    [14]          [15]           [16]
END DATE:       [17]  END DATE DESCRIPTION:                [18]

END DATE:             END DATE DESCRIPTION:

END DATE:             END DATE DESCRIPTION:

END DATE:             END DATE DESCRIPTION:
```

Figure 8:171. Travel Advance Inquiry Table (TADV)

Note: Fields [17] through [18] are updated by the TOHT.

[17] **End Date**. Displays the ending date for the travel covered by the travel order.

[18] **End Date Description**. Displays the description of the end date as entered in the travel order.

After viewing the data, you have several options, as described below:

- To view another record, repeat the above process.
- To view another table, key in ***N*** at the Action field and the applicable table ID at the TableID field, then press [Enter].
- To access a document screen, key in ***L*** at the Action field and the applicable document transaction code at the TableID field. Use the [Space Bar] to erase the remaining 2 characters, then press [Enter].
- To exit the system, follow the sign-off instructions under **Part 2, Accessing The System**.

Travel Advance Header Inquiry Table (TAHT)

The TAHT is used to view a list of travel advance balances for each employee by travel type.

To access the TAHT, at the FFS screen, key in ***N*** at the Action field and ***TAHT*** at the TableID field, then press [Enter]. The TAHT screen (**Figure 8:172**) is displayed with an ***S*** in the Action field.

Displaying A Record. For instructions on displaying a record, see **Part 2, Using Tables**.

The fields on the TAHT are listed below with an explanation of each:

[1] **Action.** Displays ***S***.

[2] **TableID.** Displays ***TAHT***.

[3] **UserID.** Displays the user ID.

[4] **Employee Code** 🔑. Displays the identification code of the employee who received this travel advance.

[5] **Travel Type** 🔑. Displays the type of travel for this advance.

[6] **Employee Name**. Displays the name of the employee who received this travel advance.

[7] **Last Print Date**. Displays the latest date on which a dunning notice was printed asking the employee to return the outstanding in travel advance. This field is updated by the dunning notice offline process.

[8] **Prev Summarized Balance**. Displays the beginning balance for the advance. Whenever the advance records are archived, this field is updated to reflect all activity that is removed from this table. This field is updated by the travel advance clearing offline process.

[9] **Last Age Of Notice**. Displays the age of the advance at the time the last dunning notice was printed. This field is updated by the dunning notice offline process and notice of overdue payment offline process.

[10] **Current Balance**. Displays the current total balance for all travel advances recorded for this employee and travel type.

[11] **Last Activity Date**. Displays the appropriate date of the last transaction that updated this travel advance. This date is used to calculate the age of an unobligated travel advance. Travel Orders use the scheduled payment date, Imprest Fund Reimbursements and Travel Vouchers use the document date; Cash Receipts do not update this field.

[12] **Last Dunning Date**. Displays the date the last dunning notice was sent to the debtor. This field is updated by the dunning notice offline process.

```
ACTION: S  [1] TABLEID: TAHT   [2] USERID: NFxx   [3]
                *** TRAVEL ADVANCE HEADER INQUIRY TABLE ***
KEY IS EMPLOYEE CODE, TRAVEL TYPE
01-
   EMPLOYEE CODE:    [4]                    TRAVEL TYPE:    [5]
   EMPLOYEE NAME:    [6]
      LAST PRINT DATE:    [7]    PREV SUMMARIZED BALANCE:    [8]
   LAST AGE OF NOTICE:    [9]           CURRENT BALANCE:    [10]
   LAST ACTIVITY DATE:    [11]       LAST DUNNING DATE:    [12]
02-
   EMPLOYEE CODE:                          TRAVEL TYPE:
   EMPLOYEE NAME:
     LAST PRINT DATE:          PREV SUMMARIZED BALANCE:
   LAST AGE OF NOTICE:                CURRENT BALANCE:
   LAST ACTIVITY DATE:             LAST DUNNING DATE:
03-
  EMPLOYEE CODE:                           TRAVEL TYPE:
  EMPLOYEE NAME:
   LAST PRINT DATE:           PREV SUMMARIZED BALANCE:
  LAST AGE OF NOTICE:                 CURRENT BALANCE:
  LAST ACTIVITY DATE:              LAST DUNNING DATE:
```

Figure 8:172. Travel Advance Header Inquiry Table (TAHT)

After viewing the data, you have several options, as described below:

- To view another record, repeat the above process.
- To view another table, key in ***N*** at the Action field and the applicable table ID at the TableID field, then press [Enter].
- To access a document screen, key in ***L*** at the Action field and the applicable document transaction code at the TableID field. Use the [Space Bar] to erase the remaining 2 characters, then press [Enter].
- To exit the system, follow the sign-off instructions under **Part 2, Accessing The System**.

Travel Advance Line Inquiry Table (TALT)

The TALT is used to view detailed information associated with a travel advance transaction.

To access the TALT, at the FFS screen, key in ***N*** at the Action field and ***TALT*** at the TableID field, then press [Enter]. The TALT screen (**Figure 8:173**) is displayed with an ***S*** in the Action field.

Displaying A Record. For instructions on displaying a record, see **Part 2, Using Tables**.

The fields on the TALT are listed below with an explanation of each:

[1] **Action.** Displays ***S***.

[2] **TableID.** Displays ***TALT***.

[3] **UserID.** Displays the user ID.

[4] **Employee Code** 🔑. Displays the identification code of the employee who received this travel advance.

[5] **Travel Type** 🔑**.** Displays the type of travel for this advance.

[6] **Travel Order** 🔑**.** Displays the document identification code for the TO that authorized this advance. This field is blank for advances of unobligated travel.

[7] **Adv Num** 🔑**.** Displays the number that identifies the advance. This is used by the travel order to distinguish modification from original-entry advance issuances and to allow the TV's advance liquidation to reference an accounting distribution.

[8] **Doc ID** 🔑**.** Displays the transaction code and document number that created this advance request or application.

[9] **Line Num**. Displays the line number of the document that references this advance.

[10] **Check Address Code**. Displays the address code where the check is to be sent. If blank, the check is picked up by the traveler.

[11] **Trns Date**. Displays the date of the travel advance request or application.

[12] **Print Ck**. Displays a ***Y*** if an automated check is to be generated for this advance. Displays a ***N*** if a manual payment is to be used.

[13] **Chck Addr**. Displays the address of the check.

[14] **Last Mod**. Displays the latest date any change was made to this record through the travel order.

[15] **Pick Up Ck**. Displays a ***Y*** if the check is to be sent to the agency for hand delivery to the employee.

[16] **SCat**. Displays one of the following categories of the SF-1166 schedule used to pay the advance:

T	=	Automated Treasury schedule
M	=	Manual Treasury schedule
S	=	TFCS payment
A	=	ACH payment

[17] **Trns Type**. Displays the transaction type associated with this advance in this document.

[18] **No Check Disb**. Displays a ***Y*** if this payment has no check number associated with it. Displays a ***N*** if this payment is associated with a check number.

```
 ACTION: S [1] TABLEID: TALT [2] USERID: NFxx [3]
          *** TRAVEL ADVANCE LINE INQUIRY TABLE ***
KEY IS EMPLOYEE CODE, TRAVEL TYPE, TRAVEL ORDER, ADV NUM, DOC ID

   EMPLOYEE CODE:    [4]       TRAVEL TYPE: [5] TRAVEL ORDER:    [6]
01-
  ADV NUM:     [7] DOC ID:     [8]          LINE NUM: [9] CHECK ADDRESS CODE:    [10]
  TRNS DATE:   [11]       PRINT CK:[12] CHCK ADDR:    [13]
   LAST MOD:   [14]     PICK UP CK:[15] SCAT:    [16]
  TRNS TYPE:   [17]  NO CHECK DISB:[18] SFY:     [19]
  DISB OFFC:   [20] SCHEDULE NUMBER:    [21]      BUDGET FYS:    [22] FUND:     [23]
  BUD ORG/SB:  [24]        COST ORG/SB:  [25]          PGM:     [26]   RPTG:   [27]
  JOB NUMBER:  [28]           DESC:      [29]     TRANS AMT:    [30]
02-
 ADV NUM:        DOC ID:                LINE NUM:     CHECK ADDRESS CODE:
 TRNS DATE:           PRINT CK:   CHCK ADDR:
  LAST MOD:         PICK UP CK:   SCAT:
 RNS TYPE:       NO CHECK DISB:   SFY:
 DISB OFFC:      SCHEDULE NUMBER:            BUDGET FYS:        FUND:
 BUD ORG/SB:           COST ORG/SB:              PGM:          RPTG:
 JOB NUMBER:              DESC:                TRANS AMT
```

Figure 8:173. Travel Advance Line Inquiry Table (TALT)

[19] **SFY**. Displays the fiscal year of the SF-1166 schedule used to pay the advance.

[20] **Disb Offc**. Displays the disbursing office from which payment is made if a manual payment is to be used to pay this advance.

[21] **Schedule Number**. Displays the agency assigned SF-1166 schedule number.

[22] **Budget FYs**. Displays the budget fiscal year(s) entered for this advance transaction.

[23] **Fund**. Displays the fund code entered for this advance transaction.

[24] **Bud Org/Sb**. Displays the budget organization/sub organization entered for this advance transaction.

[25] **Cost Org/Sb**. Displays the cost organization/sub organization used in the accounting distribution for this advance transaction.

[26] **Pgm**. Displays the program code used in the accounting distribution for this advance transaction.

[27] **Rptg**. Displays the reporting category used in the accounting distribution for this advance transaction.

[28] **Job Number**. Displays the job number used in the accounting distribution for this advance transaction.

[29] **Desc**. Displays the description that was entered in the travel order.

[30] **Trans Amt**. Displays the dollar amount of the travel advance document.

After viewing the data, you have several options, as described below:

- To view another record, repeat the above process.

- To view another table, key in ***N*** at the Action field and the applicable table ID at the TableID field, then press [Enter].

- To access a document screen, key in ***L*** at the Action field and the applicable document transaction code at the TableID field. Use the [Space Bar] to erase the remaining 2 characters, then press [Enter].

- To exit the system, follow the sign-off instructions under **Part 2, Accessing The System**.

Travel Interface Document Inquiry Table (TIDT)

The TIDT is used to view FFIS documents using key information about specific travel transactions. This information enables the researcher to trace the corresponding FFIS document and line number that was processed. This table is updated by the same interface programs that generates the travel documents (TRVL).

To access the TIDT, at the FFS screen, key in ***N*** at the Action field and ***TIDT*** at the TableID field, then press [Enter]. The TIDT screen (**Figure 8:174**) is displayed with an ***S*** in the Action field.

Displaying A Record. For instructions on displaying a record, see **Part 2, Using Tables**.

The fields on the TIDT are listed below with an explanation of each:

[1] **Action.** Displays ***S***.

[2] **TableID**. Displays ***TIDT***.

[3] **UserID**. Displays the user ID.

[4] **SSN** 🔑. Displays the social security number of the traveler.

[5] **Auth No** 🔑. Displays the traveler's authorization number.

[6] **Agcy** 🔑. Displays the agency number that the document was created.

[7] **Type** 🔑. Displays the type of document. Valid values are as follows:

ADVN	=	XA type
OBLG	=	XO type
IMPF	=	XI type
AMEX	=	XM type
VCHR	=	XT type
APPL	=	XC type
VCHR	=	XP type
VCHR	=	XV type

[8] **Begin Date** 🔑. Displays the begin date of travel.

[9] **End Date** 🔑. Displays the end date of travel.

[10] **Accounting Class** 🔑. Displays the accounting information associated with the transaction.

[11] **Boc** 🔑. Displays the budget object class of the transaction.

[12] **Schd #** 🔑. Displays the register schedule number.

[13] **Seq #** 🔑. Displays the sequence number of the transaction.

[14] **FFIS DocID**. Displays the FFIS Doc ID. The FFIS Doc ID consist of a 2-position transaction code, 11-position transaction number and a 3-position line number of transaction.

```
ACTION: S [1] TABLEID: TIDT [2] USERID: NFxx [3]
        *** TRAVEL INTERFACE DOCUMENT INQUIRY TABLE ***
KEY IS SSN, AUTH NO, AGENCY, TYPE, BEGIN DATE, END DATE, ACCOUNTING CLASS,
BOC, REG SCH #, SEQ #
    SSN: [4]          AUTH NO: [5]
          BEGIN  END
AGCY TYPE  DATE   DATE  ACCOUNTING CLASS                    BOC  SCHD # SEQ #
---- ---- ------ ------ ------------------------------------ ---- ------ -----
[6]  [7]  [8]    [9]        [10]                             [11] [12]   [13]

FFIS DOCID:      [14]          VENDOR:      [15]
FFIS DOCID:                    VENDOR:
FFIS DOCID:                    VENDOR:
FFIS DOCID:                    VENDOR:
FFIS DOCID:                    VENDOR:
```

Figure 8:174. Travel Interface Document Inquiry Table (TIDT)

15 **Vendor**. Displays the vendor ID. The vendor ID consist of a 10-position vendor ID and a 1-position address code.

After viewing the data, you have several options, as described below:

- To view another record, repeat the above process.
- To view another table, key in ***N*** at the Action field and the applicable table ID at the Table ID field, then press [Enter].
- To access a document screen, key in ***L*** at the Action field and the applicable document transaction code at the TableID field. Use the [Space Bar] to erase the remaining 2 characters, then press [Enter].
- To exit the system, follow the sign-off instructions under **Part 2, Accessing The System**.

TIN Number Cross Reference Inquiry Table (TINT)

The TINT is used to view information about taxpayer identification numbers and associated vendor codes and vendor names.

To access the TINT, at the FFS screen, key in ***N*** at the Action field and ***TINT*** at the TableID field, then press [Enter]. The TINT screen (**Figure 8:175**) is displayed with an ***S*** in the Action field.

Displaying A Record. For instructions on displaying a record, see **Part 2, Using Tables**.

The fields on the TINT are listed below with an explanation of each:

[1] **Action.** Displays ***S***.

[2] **TableID**. Displays ***TINT***.

[3] **UserID**. Displays the user ID.

Note: Fields [4] through [6] are updated by the VEND.

[4] **Taxpayer ID** 🔑. Displays the taxpayer identification number as it appears in the social security/Federal ID # field on the VEND.

[5] **Vendor Code** 🔑. Displays the vendor code as it appears on the VEND.

[6] **Vendor Name** 🔑. Displays the vendor name associated with the vendor code as it appears on the VEND.

After viewing the data, you have several options, as described below:

- To view another record, repeat the above process.

- To view another table, key in ***N*** at the Action field and the applicable table ID at the Table ID field, then press [Enter].

- To access a document screen, key in ***L*** at the Action field and the applicable document transaction code at the TableID field. Use the [Space Bar] to erase the remaining 2 characters, then press [Enter].

- To exit the system, follow the sign-off instructions under **Part 2, Accessing The System**.

```
   ACTION: S [1]   TABLEID: TINT [2]   USERID: NFxx [3]
              *** TIN NUMBER CROSS REFERENCE INQUIRY TABLE ***
KEY IS TAXPAYER ID, VENDOR CODE
    TAXPAYER ID VENDOR CODE  VENDOR NAME
    ----------- ------------ ------------------------------
01-     [4]          [5]        [6]
02-
03-
04-
05-
06-
07-
08-
09-
10-
11-
12-
13-
14-
15-
```

Figure 8:175. TIN Number Cross Reference Inquiry Table (TINT)

Transportation Invoice Header Inquiry Table (TNHT)

The TNHT is used to view summary-level data for transportation invoice documents.

To access the TNHT, at the FFS screen, key in ***N*** at the Action field and ***TNHT*** at the TableID field, then press [Enter]. The TNHT screen (**Figure 8:176**) is displayed with an ***S*** in the Action field.

Displaying A Record. For instructions on displaying a record, see **Part 2, Using Tables**.

The fields on the TNHT are listed below with an explanation of each:

[1] **Action.** Displays ***S***.

[2] **TableID.** Displays ***TNHT***.

[3] **UserID.** Displays the user ID.

[4] **Vendor Code** 🔑. Displays the code number of the common carrier or travel agency to whom payments are to b made.

[5] **Trans Code** 🔑. Displays the transaction code for the transportation invoice.

[6] **Invoice Number** 🔑. Displays the document ID for the PV used to pay the common carrier or travel agency.

[7] **Schd Fisc Yr**. Displays the fiscal year of the SF-1166 schedule used to pay the common carrier or travel agency.

[8] **Schd Cat**. Displays one of the following category of the SF-1166 schedule used to pay the common carrier or travel agency.

- ***T*** = Automated Treasury schedule
- ***M*** = Manual Treasury schedule
- ***S*** = TFCS payment
- ***A*** = ACH payment

[9] **Schd Number**. Displays the agency-assigned (not preprinted) number of the SF-1166 schedule which is to be used to manually pay this invoice.

[10] **Vendor Name**. Displays the name of the vendor to whom payment is to be made.

[11] **Vendr Addr1**. Displays the first address of the vendor to whom payments is to be made.

[12] **Disb Office**. Displays the Treasury disbursing office which will pay for this voucher.

[13] **Vendr Addr2**. Displays the second address of the vendor to whom payments is to be made.

[14] **Interest Rsn**. Displays the reason code for the payment .

[15] **Vendr Addr3**. Displays the third address of the vendor to whom payments is to be made.

[16] **VI Date**. Displays the date used on the invoice received by the vendor.

[17] **GTR Number**. Displays the number of the GTR.

[18] **Fund**. Displays the fund code.

[19] **Trans Date**. Displays the date of the voucher.

[20] **Budget FY**. Displays the last two digits of the budget fiscal year to which this document applies.

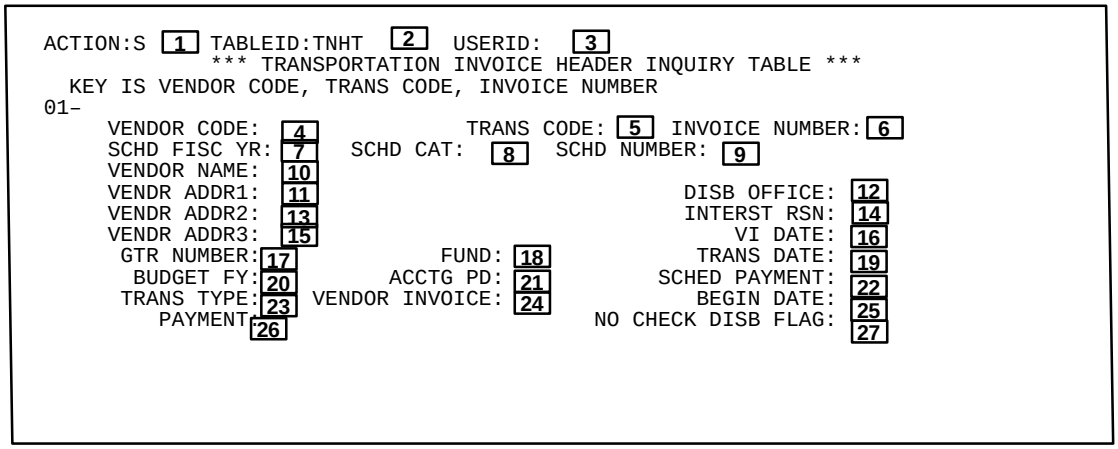

Figure 8:176. Transportation Invoice Header Inquiry Table (TNHT)

21 **Acctg Pd**. Displays the accounting period associated with this voucher.

22 **Sched Payment**. Displays the date on which the check for this invoice is to be issued.

23 **Trans Type**. Displays the transaction type associated with this transportation invoice.

24 **Vendor Invoice**. Displays the invoice number used by the vendor for identification.

25 **Begin Date**. Displays the beginning date covered by this invoice.

26 **Payment**. Displays the amount of payment made by this voucher.

27 **No Check Disb Flag**. Displays ***Y*** if this payment has no check number associated with it. Displays ***N*** if it is associated with a check number.

After viewing the data, you have several options, as described below:

- To view another record, repeat the above process.
- To view another table, key in ***N*** at the Action field and the applicable table ID at the TableID field, then press [Enter].
- To access a document screen, key in ***L*** at the Action field and the applicable document transaction code at the TableID field. Use the [Space Bar] to erase the remaining 2 characters, then press [Enter].
- To exit the system, follow the sign-off instructions under **Part 2, Accessing The System**.

Transportation Invoice Line Inquiry Table (TNLT)

The TNLT is used to view the detail ticket and accounting for transportation invoice documents.

To access the TNLT, at the FFS screen, key in ***N*** at the Action field and ***TNLT*** at the TableID field, then press [Enter]. The TNLT screen (**Figure 8:178**) is displayed with an ***S*** in the Action field.

Displaying A Record. For instructions on displaying a record, see **Part 2, Using Tables**.

The fields on the TNLT are listed below with an explanation of each:

1 **Action.** Displays ***S***.

2 **TableID.** Displays ***TNLT***.

3 **UserID.** Displays the user ID.

4 **Vendor Code** 🔑. Displays the code number of the common carrier or travel agency who is requesting payment.

5 **Tans Code** 🔑. Displays the transaction code associated with the transportation invoice.

6 **Invoice Number** 🔑. Displays the document number associated with the transportation invoice.

7 **Line Num** 🔑. Displays the number that identifies each ticket/GTR line.

8 **GTR Num**. Displays the number of the Government transportation request, or the contract number of the Government Transportation System, associated with this ticket.

9 **Ticket Num**. Displays the first line address of the employee that is associated with the travel order.

10 **Void**. Displays the second line address of the employee that is associated with the travel order.

11 **Gbat**. Displays the third line address of the employee that is associated with the travael order.

12 **Ref To**. Displays the type of travel for the travel order.

13 **Ref Line**. Displays the codes for the different modes of transportation used under the travel order. This field is updated by the travel order.

14 **Travel Type**. Displays the date for the travel order.

15 **Accp Date**. Displays the transaction type associated with the travel order.

16 **Vendor Inv #/Ln**. Displays information from the invoice received from the vendor.

17 **Inv Date**. Displays information from the invoice received from the vendor.

18 **Log Date**. Displays the official receipt date of the vendor invoice, as used in prompt pay calculations. It may have either been entered in the payment document or inferred from document tracking, the vendor invoice date, or transaction date.

19 **Budget Org/Sub**. Displays the budget org/sub accounting distribution for this line.

20 **Budget FYs**. Displays the budget fiscal years accounting distribution for this line.

21 **Fund**. Displays the fund accounting distribution for this line.

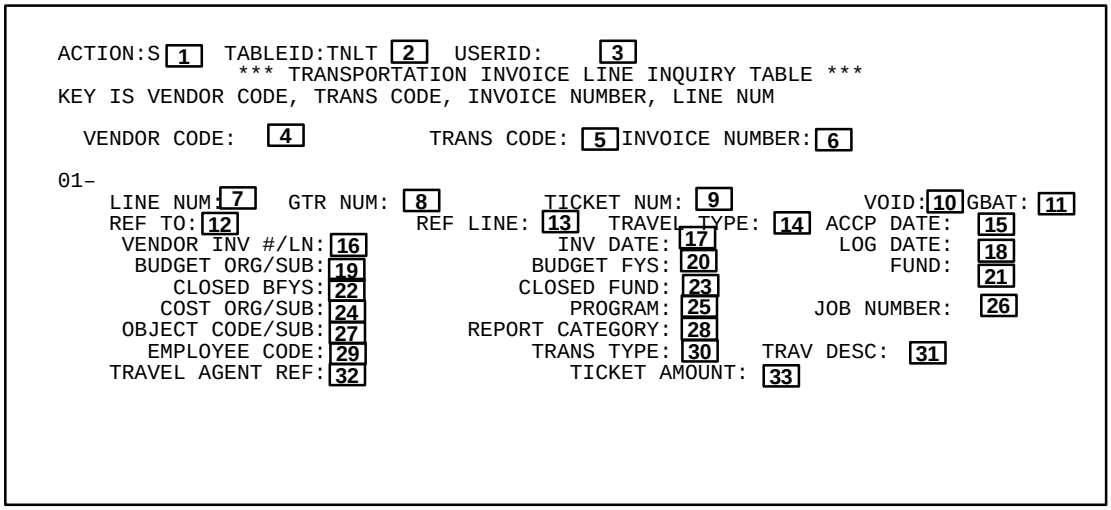

Figure 8:177. Transportation Invoice Line Inquiry Table (TNLT)

[22] **Closed BFYs**. Displays the budget fiscal years of the canceled appropriation referenced by this document line.

[23] **Closed Fund**. Displays the fund of the canceled appropriation referenced by this document line.

[24] **Cost Org/Sub**. Displays the cost org/sub accounting distribution for this line.

[25] **Program**. Displays the program accounting distribution for this line.

[26] **Job Number**. Displays the job number accounting distribution for this line.

[27] **Object Code/Sub**. Displays the object code/sub accounting distribution for this line.

[28] **Report Category**. Displays the report category accounting distribution for this line.

[29] **Employee Code**. Displays the identification number of the traveler for whom this ticket was issued.

[30] **Trans Type**. Displays the transaction type that is associated with the dollar amount being entered for the ticket payment.

[31] **Trav Desc**. Displays the code that describes the nature of the expense.

[32] **Travel Agent Ref**. Displays the reference transaction number assigned by the travel agent (this generally applies only to the Government Transportation System).

[33] **Ticket Amount**. Displays the net amount of the ticket/GTR, including tax.

After viewing the data, you have several options, as described below:

- To view another record, repeat the above process.

- To view another table, key in ***N*** at the Action field and the applicable table ID at the TableID field, then press [Enter].

- To access a document screen, key in ***L*** at the Action field and the applicable document transaction code at the TableID field. Use the [Space Bar] to erase the remaining 2 characters, then press [Enter].

- To exit the system, follow the sign-off instructions under **Part 2, Accessing The System**.

Travel Order Header Inquiry Table (TOHT)

The TOHT is used to view summary information about travel orders.

To access the TOHT, at the FFS screen, key in ***N*** at the Action field and ***TOHT*** at the TableID field, then press [Enter]. The TOHT screen (**Figure 8:178**) is displayed with an ***S*** in the Action field.

Displaying A Record. For instructions on displaying a record, see **Part 2, Using Tables**.

The fields on the TOHT are listed below with an explanation of each:

[1] **Action.** Displays ***S***.

[2] **TableID.** Displays ***TOHT***.

[3] **UserID.** Displays the user ID.

[4] **Trans Code** 🔑. Displays the transaction code that is associated with the travel order.

[5] **Order Number** 🔑. Displays the number that identifies the travel order.

[6] **Employee Code**. Displays the identification number of the employee who received the travel order.

[7] **Cancel**. Displays a flag to indicate whether or not the travel order has been canceled.

[8] **Name**. Displays the name of the employee that is associated with the travel order.

[9] **Addr1**. Displays the first line address of the employee that is associated with the travel order.

[10] **Addr2**. Displays the second line address of the employee that is associated with the travel order.

[11] **Addr3**. Displays the third line address of the employee that is associated with the travael order.

[12] **Travel Type**. Displays the type of travel for the travel order.

[13] **Travel Modes**. Displays the codes for the different modes of transportation used under the travel order. This field is updated by the travel order.

[14] **Date Of Order**. Displays the date for the travel order.

[15] **Oblig Trans Type**. Displays the transaction type associated with the travel order.

[16] **Travel Purpose**. Displays the codes that describe the purpose of the travel order.

[17] **Last Mod Date**. Displays the last date on which modifications (amendments) where made to the travel order.

[18] **Accounting Period**. Displays the accounting period associated with this document.

[19] **PCS Auth Code**. Displays the codes that describe the purpose for which a permanent change of station is authorized. This field is updated by the travel order.

[20] **Closed Date**. Displays the date the travel order was closed.

[21] **Print Flag**. Displays ***Y*** if the travel order was scheduled to be printed. Displays ***N*** if the travel order was not scheduled to be printed.

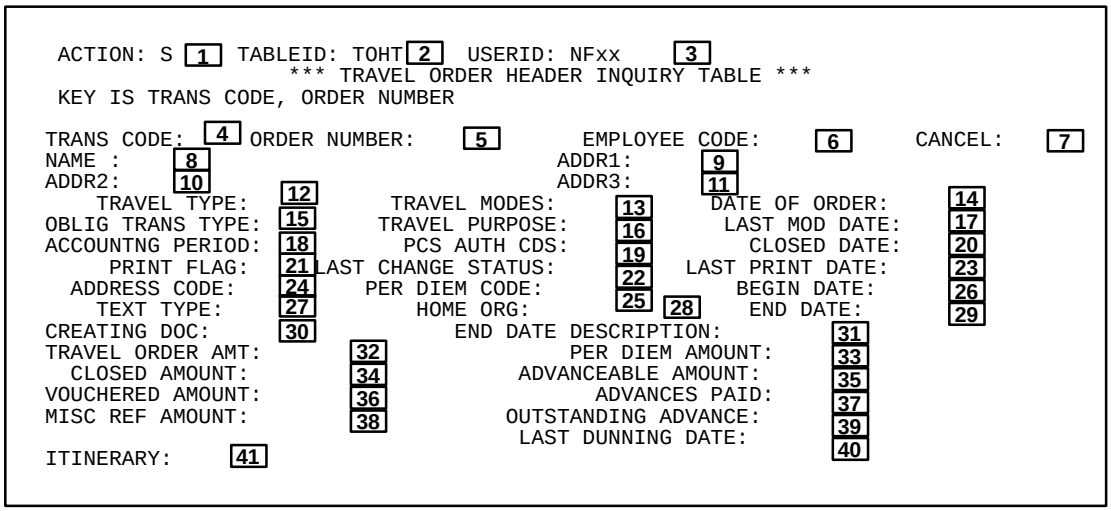

Figure 8:178. Travel Order Header Inquiry Table (TOHT)

[22] **Last Change Status**. Displays a flag to indicate if the travel order appears as changed when it is printed.

C	=	The travel order appears as changed.
A	=	The travel order appears as changed on reprints.
Blank	=	The travel does not appear as changed.

[23] **Last Print Date**. Displays the last date that this TO was printed.

[24] **Address Code**. Displays the code for the address to be printed on the travel order.

[25] **Per Diem Code**. Displays the code that indicates the type of per diem allowance.

[26] **Begin Date**. Displays the starting date for the travel covered by the travel order.

[27] **Text Type**. Displays the text type. These codes point to lines in the CLTX which define text to be included on the printed travel order.

[28] **Home Org**. Displays the organization to which the employee was assigned when the document was processed.

[29] **End Date**. Displays the ending date for the travel covered by the travel order.

[30] **Creating Doc**. Displays the transaction code and number of the travel advance or voucher document if no obligating document was entered into FFIS for this travel.

[31] **End Date Description**. Displays the text description of the end date for the travel order.

[32] **Travel Order Amt**. Displays the amount obligated for this travel.

[33] **Per Diem Amount**. Displays the maximum amount that the traveler is authorized to spend daily for subsistence.

[34] **Closed Amount**. Displays the amount for which the obligation was closed.

[35] **Advanceable Amount**. Displays the amount that can be advanced for this travel. If an obligation was entered, then this is equal to the advanceable percentage of the sum of all obligation lines whose descriptions indicate that they are to be paid by the traveler. Otherwise, displays an amount equal to the advances authorized.

[36] **Vouchered Amount**. Displays the total amount of all expended moneys which reference the travel order.

[37] **Advances Paid**. Displays the total amount of advances paid to the traveler for this travel. This will be equal to the advances authorized for manual or automated check payments, but cash advances authorized will not be added to this field until processed by the imprest fund.

[38] **Misc Ref Amount**. Displays the total amount of all expended moneys that reference the travel order, but not a specific line in the travel order. These items are recorded in any voucher with a reference line number of ***MMM***.

[39] **Outstanding Advance**. Displays the total amount of all advances paid against the travel order, minus the total amount of all advance applications and returns against the travel order.

[40] **Last Dunning Date**. Displays the date the last dunning notice was sent to the debtor. This field is updated by the dunning notice offline process.

[41] **Itinerary**. Displays the cities to be visited and the point of departure.

After viewing the data, you have several options, as described below:

- To view another record, repeat the above process.
- To view another table, key in ***N*** at the Action field and the applicable table ID at the TableID field, then press [Enter].
- To access a document screen, key in ***L*** at the Action field and the applicable document transaction code at the TableID field. Use the [Space Bar] to erase the remaining 2 characters, then press [Enter].
- To exit the system, follow the sign-off instructions under **Part 2, Accessing The System**.

Travel Order Line Inquiry Table (TOLT)

The TOLT is used to view detailed information about travel orders.

To access the TOLT, at the FFS screen, key in ***N*** at the Action field and ***TOLT*** at the TableID field, then press [Enter]. The TOLT screen (**Figure 8:179**) is displayed with an ***S*** in the Action field.

Displaying A Record. For instructions on displaying a record, see **Part 2, Using Tables**.

The fields on the TOLT are listed below with an explanation of each:

[1] **Action.** Displays ***S***.

[2] **TableID.** Displays ***TOLT***.

[3] **UserID.** Displays the user ID.

[4] **Trans Code** 🔑. Displays the transaction code that is associated with the travel order.

[5] **Order Number** 🔑. Displays the number that identifies the travel order.

[6] **Line Num** 🔑. Displays the line number that identifies each accounting line.

[7] **Status**. Displays a flag to indicate if the line is printed.

C	=	The line appears as changed.
A	=	The line appears as changed only on reprints.
Blank	=	The line does not appear as changed.
Y	=	The line is printed.

[8] **Desc**. Displays the description that was entered in the travel order obligation line.

[9] **Budget FYs**. Displays the budget fiscal years entered for the travel order line.

[10] **Fund**. Displays the fund code entered for the travel order line.

[11] **Obligation**. Displays the obligation amount associated with this line's travel description, budget organization, and budget object code.

[12] **Bud Org/Sb**. Displays the budget organization/sub organization entered for the travel order line.

[13] **Object/Sub**. Displays the object/sub object used in the accounting distribution for the travael order line.

[14] **Closed Amt**. Displays the amount for which this accounting line was closed by a document.

[15] **Cost Org/Sb**. Displays the cost organization/sub organization used in the accounting distribution for the travel order line.

[16] **Rept Cat**. Displays the reporting category used in the accounting distribution for the travel order line.

[17] **Vouchered Amt**. Displays the amount expensed to date, as reported on one or more documents.

[18] **Program**. Displays the program code used in the accounting distribution for the travel order line.

```
ACTION: S [1] TABLEID: TOLT [2] USERID: NFxx  [3]
                *** TRAVEL ORDER LINE INQUIRY TABLE ***
KEY IS TRANS CODE, ORDER NUMBER, LINE NUMBER
TRANS CODE:[4]  ORDER NUMBER: [5]

01- LINE NUMBER: [6]   STATUS: [7]  DESC:  [8]
    BUDGET FYS:  [9]          FUND:  [10]      OBLIGATION:  [11]
    BUDG ORG/SB: [12]      OBJECT/SUB: [13]     CLOSED AMT: [14]
   COST ORG/SB:  [15]        REPT CAT:  [16] VOUCHERED AMT: [17]
      PROGRAM:   [18]     JOB NUMBER:  [19]     DESC CODE:  [20]
   CLOSED BFYS:  [21]     CLOSED FUND:  [22]
02- LINE NUMBER:       STATUS:     DESC:
    BUDGET FYS:               FUND:          OBLIGATION:
   BUDG ORG/SB:            OBJECT/SUB:        CLOSED AMT:
   COST ORG/SB:              REPT CAT:      VOUCHERED AMT:
      PROGRAM:            JOB NUMBER:         DESC CODE:
   CLOSED BFYS:           CLOSED FUND:
```

Figure 8:179. Travel Order Line Inquiry Table (TOLT)

19 **Job Number**. Displays the job number used in the accounting distribution for this advance transaction.

20 **Desc Code**. Displays the description code which describes the nature of the obligation on this accounting line.

21 **Closed BFYs**. Displays the budget fiscal year(s) of the canceled appropriation reference by this document line.

22 **Closed Fund**. Displays the fund of the canceled appropriation reference by this document line.

After viewing the data, you have several options, as described below:

- To view another record, repeat the above process.
- To view another table, key in ***N*** at the Action field and the applicable table ID at the TableID field, then press [Enter].
- To access a document screen, key in ***L*** at the Action field and the applicable document transaction code at the TableID field. Use the [Space Bar] to erase the remaining 2 characters, then press [Enter].
- To exit the system, follow the sign-off instructions under **Part 2, Accessing The System**.

Treasury Offset Entry Table (TOPT)

The TOPT is used to view record and track offset payment information received from Treasury.

To access the TOPT, at the FFS screen, key in ***N*** at the Action field and ***TOPT*** at the TableID field, then press [Enter]. The TOPT screen (**Figure 8:180**) is displayed with an ***S*** in the Action field.

Displaying A Record. For instructions on displaying a record, see **Part 2, Using Tables**.

The fields on the TOLT are listed below with an explanation of each:

1 **Action**. Displays ***S***.

2 **TableID**. Displays ***TOPT***.

3 **UserID**. Displays the user ID.

4 **Check Num**. Displays the check number.

5 **D. O.**. Displays the d. o.

6 **Fisc Yr**.Displays the fiscal year.

7 **Schd Cat**. Displays the schedule category.

8 **Schd Type**. Displays the schedule type.

9 **Agency Schedule No**. Displays the schedule number.

10 **Payee**. Displays the payee.

11 **Check Date**. Displays the check date.

12 **Offset Amount**. Displays the offset amount.

13 **Comments**. Displays the comments.

After viewing the data, you have several options, as described below:

- To view another record, repeat the above process.
- To view another table, key in ***N*** at the Action field and the applicable table ID at the TableID field, then press [Enter].
- To access a document screen, key in ***L*** at the Action field and the applicable document transaction code at the TableID field. Use the [Space Bar] to erase the remaining 2 characters, then press [Enter].
- To exit the system, follow the sign-off instructions under **Part 2, Accessing The System**.

```
ACTION: S [1]  TABLEID: TOPT [2]  USERID: NFxx [3]
                  *** TREASURY OFFSET ENTRY TABLE ***
KEY IS CHECK NUM, D.O., FY, SCHD CAT, SCHD TYPE, SCHD NO
01-
    CHECK NUM: [4]              D.O.: [5]
    FISC YR:   [6]  SCHD CAT: [7]  SCHD TYPE:[8] AGENCY SCHEDULE NO: [9]
    PAYEE:     [10]                CHECK DATE:[11]
    OFFSET AMOUNT: [12]
    COMMENTS:      [13]
 02-
    CHECK NUM:                  D.O.:
    FISC YR:       SCHD CAT:       SCHD TYPE:   AGENCY SCHEDULE NO:
    PAYEE:                         CHECK DATE:
    OFFSET AMOUNT:
    COMMENTS:
```

Figure 8:180. Treasury Offset Entry Table (TOPT)

Allocation Totals Inquiry Table (TOTL)

The TOTL is used to view information on the total base amounts and percentages needed to compute the allocated amounts for the group/step.

To access the TOTL, at the FFS screen, key in ***N*** at the Action field and ***TOTL*** at the TableID field, then press [Enter]. The TOTL screen (**Figure 8:181**) is displayed with an ***S*** in the Action field.

Displaying A Record. For instructions on displaying a record, see **Part 2, Using Tables**.

The fields on the TOTL are listed below with an explanation of each:

[1] **Action.** Displays ***S***.

[2] **TableID.** Displays ***TOTL***.

[3] **UserID.** Displays the user ID.

Note: Fields [4] through [11] are updated through the Cost Allocation Pool Accumulation Processing and Report process, unless otherwise stated.

[4] **Group** 🔑**.** Displays the number assigned to this group.

[5] **Step** 🔑**.** Displays the number assigned to the step within the group.

[6] **Base Type.** Displays one of the following types of base records being processed in this group/step:

- ***S*** = indicates statistical base records
- ***P*** = indicates fixed-percentage base records
- ***A*** = indicates variable-percentage base records

[7] **Pool Total.** Displays the sum of the accumulated amounts for all pool records associated with this group/step in the PACC.

[8] **Base Total.** Displays the sum of the allocated amounts for all base records associated with this group/step.

[9] **Total Stat Units.** Displays the sum of all units in the PBDF base records for this group/step. This field is only applicable for records with a base type indicator of ***S***.

[10] **Percent Total.** Displays the sum of the percents for all fixed-percentage or statistical base records associated with this group/step in the PBDF.

[11] **Desc.** Displays the description for this group.

After viewing the data, you have several options, as described below:

- To view another record, repeat the above process.
- To view another table, key in ***N*** at the Action field and the applicable table ID at the Table ID field, then press [Enter].
- To access a document screen, key in ***L*** at the Action field and the applicable document transaction code at the TableID field. Use the [Space Bar] to erase the remaining 2 characters, then press [Enter].
- To exit the system, follow the sign-off instructions under **Part 2, Accessing The System**.

```
ACTION: S [1] TABLEID: TOTL [2] USERID: NFBxx [3]
                  *** ALLOCATION TOTALS INQUIRY TABLE ***
KEY IS GROUP NO, STEP
01- GROUP: [4]    STEP: [5]      BASE TYPE:[6] POOL TOTAL: [7]
    BASE TOTAL: [8]                     TOTAL STAT UNITS: [9]
    PERCENT TOTAL: [10]          DESC: [11]
02- GROUP:        STEP:          BASE TYPE:    POOL TOTAL:
    BASE TOTAL:                         TOTAL STAT UNITS:
    PERCENT TOTAL:               DESC:
03- GROUP:        STEP:          BASE TYPE:    POOL TOTAL:
    BASE TOTAL:                         TOTAL STAT UNITS:
    PERCENT TOTAL:               DESC:
04- GROUP:        STEP:          BASE TYPE:    POOL TOTAL:
    BASE TOTAL:                         TOTAL STAT UNITS:
    PERCENT TOTAL:               DESC:
05- GROUP:        STEP:          BASE TYPE:    POOL TOTAL:
    BASE TOTAL:                         TOTAL STAT UNITS:
    PERCENT TOTAL:               DESC:
```

Figure 8:181. Allocation Totals Inquiry Table (TOTL)

Travel-Related Voucher Line Inquiry Table (TPLT)

The TPLT is used to view cross-reference information for travel-related payment voucher documents

To access the TPLT, at the FFS screen, key in ***N*** at the Action field and ***TPLT*** at the TableID field, then press [Enter]. The TPLT screen (**Figure 8:182**) is displayed with an ***S*** in the Action field.

Displaying A Record. For instructions on displaying a record, see **Part 2, Using Tables**.

The fields on the TPLT are listed below with an explanation of each:

[1] **Action.** Displays ***S***.

[2] **TableID.** Displays ***TPLT***.

[3] **UserID.** Displays the user ID.

[4] **Vendor Code 🔑.** Displays the code of the vendor to whom payment is being made.

[5] **Voucher Number 🔑.** Displays the transaction code and voucher number that identify this voucher.

[6] **Line Num 🔑.** Displays the number that identifies this accounting line.

[7] **Employee ID.** Displays the code that identifies the employee in whose behalf this accounting line is paid.

[8] **T.O. Trans ID.** Displays the transaction code and document number that corresponds to the travel order referenced by this accounting line.

[9] **Adv Num 🔑.** This field is blank

After viewing the data, you have several options, as described below:

- To view another record, repeat the above process.
- To view another table, key in ***N*** at the Action field and the applicable table ID at the Table ID field, then press [Enter].
- To access a document screen, key in ***L*** at the Action field and the applicable document transaction code at the TableID field. Use the [Space Bar] to erase the remaining 2 characters, then press [Enter].
- To exit the system, follow the sign-off instructions under **Part 2, Accessing The System**.

```
ACTION:S[1] TABLEID:TPLT [2]  USERID:    [3]
            *** TRAVEL-RELATED VOUCHER LINE INQUIRY TABLE ***
KEY IS VENDOR CODE, VOUCHER NUMBER, ADV NUM, LINE NUM
                                    LINE                          ADV
     VENDOR CODE   VOUCHER NUMBER   NUM   EMPLOYEE ID  T.O. TRANS ID   NUM
     ------------  --------------   ----  ------------  -------------- ------
01-      [4]            [5]         [6]       [7]          [8]         [9]
02-
03-
04-
05-
06-
07-
08-
09-
10-
11-
12-
13-
14-
15-
```

Figure 8:182. Travel-Related Voucher Line Inquiry Table (TPLT)

Training Order Header Inquiry Table (TROH)

The TROH is used to view information about each outstanding or recently closed training order document.

To access the TROH, at the FFS screen, key in ***N*** at the Action field and ***TROH*** at the TableID field, then press [Enter]. The TROH screen (**Figure 8:183**) is displayed with an ***S*** in the Action field.

Displaying A Record. For instructions on displaying a record, see **Part 2, Using Tables**.

The fields on the TROH are listed below with an explanation of each:

[1] **Action.** Displays ***S***.

[2] **TableID.** Displays ***TROH***.

[3] **UserID.** Displays the user ID.

Note: Fields [4] through [45] are updated with information from training order document, unless otherwise stated.

[4] **Trans Code** 🔑. Displays the code that identifies this order as a training order.

[5] **Order Number** 🔑. Displays the document number assigned to this order.

[6] **Doc Type**. Displays a user-defined, alpha-numeric code, except for:

- ***S*** = Special instructions to be included on the printed order
- ***B*** = Blanket agreement

[7] **Vendor Code**. Displays the code of the vendor who receives this order.

[8] **TR Date.** Displays the date the order was entered.

[9] **Trans Type**. Displays the accounting model used for this order. The codes for these models are defined in the ACED.

[10] **Name**. Displays the name of the vendor that matches the code above.

[11] **Start Date**. Displays the date on which the training starts.

[12] **Comments**. Displays a description of this order.

[13] **Comp Date**. Displays the date on which the training ends.

[14] **Contact**. Displays the name of the contact person for the vendor.

[15] **Comp Desc**. Displays comments about the end date.

[16] **Alt Payee**. Displays an alternative approved vendor code.

[17] **Resp Person**. Displays the person to whom questions about the order should be addressed.

[18] **Vendor Type**. Displays the category of vendors to which this vendor belongs.

[19] **Insp/Acc Days**. Displays the number of inspection and acceptance days for this order, representing the number of days within which any services received against this order must be marked as accepted.

```
ACTION: S [1]   TABLEID: TROH [2]     USERID: NFxx [3]
                *** TRAINING ORDER HEADER INQUIRY TABLE ***
KEY IS TRANS CODE, ORDER NUMBER
     TRANS CODE: [4]        ORDER NUMBER: [5]            DOC TYPE: [6]
    VENDOR CODE: [7]             TR DATE: [8]          TRANS TYPE: [9]
           NAME: [10]                                   START DATE: [11]
       COMMENTS: [12]                                     COMP DATE: [13]
        CONTACT: [14]                                     COMP DESC: [15]
      ALT PAYEE: [16]           /
    RESP PERSON: [17]                                  VENDOR TYPE: [18]
  INSP/ACC DAYS: [19]        COURSE CODE: [20]        TRAINING CODE: [21]
  NEG PYMT DAYS: [22]        BLANKET NO:  [23]           DUTY HOURS: [24]
    ORDERED AMT: [25]                                OFF-DUTY HOURS: [26]
     CLOSED AMT: [27]                                   CLOSED DATE: [28]
    ACCRUED AMT: [29]                                     TEXT TYPE: [30]
   EXPENDED AMT: [31]                  PRINT PO: [32] LAST PRINT DATE: [33]
OUTSTANDING AMT: [34]                                LAST CHG STATUS: [35]
   ACCEPTED AMT: [36]                                FINAL REC FLAG: [37]
   INVOICED AMT: [38]                                    CONF ORDER: [39]
    MISC REF AMT: [40]                                     COMM FLAG: [41]
    HOLDBACK AMT: [42]                  INV REQD: [43]     RCVR REQD: [44]
    DISCOUNT % / DAYS: [45]    /     ;          /      ;          /
```

Figure 8:183. Training Order Header Inquiry Table (TROH)

[20] **Course Code**. Displays a course code.

[21] **Training Code**. Displays the training code.

[22] **Neg Pymt Days**. Displays the payment terms negotiated for payment of this order after an invoice against it has been received.

[23] **Blanket No**. Displays the blanket agreement between the institution and the vendor that governs the terms of this order.

[24] **Duty Hours**. Displays a user-defined code.

[25] **Ordered Amt**. Displays the total dollar amount of all the lines on the order.

[26] **Off-Duty Hours**. Displays a user-defined code.

[27] **Closed Amt**. Displays the total amount of the order which has been closed. This amount is the sum of the closed order line amounts, even if the expended amount was more or less than the ordered amount. This field is updated by the payment documents.

[28] **Closed Date**. Displays the date when all accounting lines were closed on this order. This field is updated by the receiver and payment documents.

[29] **Accrued Amt**. Displays the total accrued amount of all the lines on this order. This field is updated by the receiver documents.

[30] **Text Type**. Displays codes defined in the TXTP. They designate the lines in the CLTX which define text to be included on the printed purchase order sent to the vendor.

[31] **Expended Amt**. Displays the total amount expended to date on this order. This field is updated by the payment documents.

[32] **Print PO**. Displays a flag to indicate whether or not to print a purchase order.

Y = Print this order
N = Not to print this order

[33] **Last Print Date**. Displays the date this order was last printed. This field is updated by the Purchase Order print program.

[34] **Outstanding Amt**. Displays the system-generated amount of the order still unliquidated (not closed).

[35] **Last Chg Status**. Displays a flag to indicate whether or not the order appears as changed when it is printed:

C = The order appears as changed
A = The order appears as changed only on reprints
Blank = The order does not appear as changed. If the order is printed online with the override parameter set to ***Y***, then this field is set to spaces before the order is printed.

[36] **Accepted Amt**. Displays the dollar amount of all goods received and accepted against this order. This field is updated by the receiver documents.

[37] **Final Rec Flag**. Displays ***Y*** to indicate a final receipt was entered and accepted against this order.

[38] **Invoiced Amt**. Displays the total amount of all vendor's invoices received against this order. This field is updated by the vendor invoice documents.

[39] **Conf Order**. Displays ***Y*** to indicate that the vendor has received a confirmation order.

[40] **Misc Ref Amt**. Displays the total amount of the order referenced by an ***MMM*** line. This field is updated by the payment documents with a reference line number of ***MMM***. This field is updated instead of the Closed Amount field.

[41] **Comm Flag**. Displays an indicator showing whether or not there are commodity lines associated with this order.

Y = Yes
Blank = No

[42] **Holdback Amt**. Displays the total amount of this order held back for later payment. This field is updated by the payment document lines.

[43] **Inv Reqd**. Displays a flag to indicate whether or not an invoice document must be submitted for this order before payment is made. This field is updated by the vendor invoice documents.

[44] **Rcvr Reqd**. Displays a flag to indicate whether or not a receiver document must be submitted for this order before payment is made. This field is updated by the receiver documents.

[45] **Discount%/Days**. Displays the discount terms associated with this order.

After viewing the data, you have several options, as described below:

- To view another record, repeat the above process.
- To view another table, key in ***N*** at the Action field and the applicable table ID at the Table ID field, then press [Enter].

- To access a document screen, key in ***L*** at the Action field and the applicable document transaction code at the TableID field. Use the [Space Bar] to erase the remaining 2 characters, then press [Enter].

- To exit the system, follow the sign-off instructions under **Part 2, Accessing The System**.

Treasury Schedule Control Line Inquiry Table (TSCL)

The TSCL is used to view:

- Information that links a schedule to the voucher lines that appear on the schedule and the payment sequence or check numbers assigned to the payments on the schedule.
- The processing status of the schedule and payment lines on the schedule.

To access the TSCL, at the FFS screen, key in ***N*** at the Action field and ***TSCL*** at the TableID field, then press [Enter]. The TSCL screen (**Figure 8:184**) is displayed with an ***S*** in the Action field.

Displaying A Record. For instructions on displaying a record, see **Part 2, Using Tables**.

The fields on the TSCL are listed below with an explanation of each:

[1] **Action.** Displays ***S***.

[2] **TableID.** Displays ***TSCL***.

[3] **UserID.** Displays the user ID.

Note: Fields [4] through [21] are updated by the Schedule Posting process, unless otherwise stated.

[4] **FY** 🔑. Displays the fiscal year to which this line applies.

[5] **Schedule Cat** 🔑**.** Displays the schedule category of this transaction.

[6] **Schedule Type** 🔑. Displays the Treasury schedule type to which this line applies.

[7] **Schedule Number** 🔑. Displays the Treasury schedule number to which this line applies.

Note: Fields [8] through [12] are indicators.

[8] **Treas Act.** Displays the code indicating Treasury confirmation, rejection, or neither for this schedule.

[9] **Post Treas Act.** Displays ***Y*** if the Treasury Reconciliation process has posted confirmation accounting entries for this schedule. Displays ***N***. if is has not. This field is also updated by the Treasury Reconciliation process.

[10] **Post Details.** Displays ***Y*** if the Treasury Reconciliation process has posted detail vouchers for this schedule. This field is set to ***Y*** when any detail voucher is posted. The schedule is completely processed when the Post Treasury Action flag is ***Y***, the Post Details flag is ***Y***, and the Expended flag is ***F***. This field is also updated by the Treasury Reconciliation process.

[11] **Exp.** Displays ***F*** (final) when the vouchered amount is equal to the confirmed amount. Otherwise, displays ***P*** (partially expended). This field is also updated by the Treasury Reconciliation process.

[12] **Backout.** Displays ***Y*** to indicate that a user has requested backout of the posted Treasury schedule. Treasury Reconciliation replaces this indicator with ***A*** (backout accomplished) when the backout is accomplished for the schedule. Displays an ***N*** if backout has not been requested for this schedule.

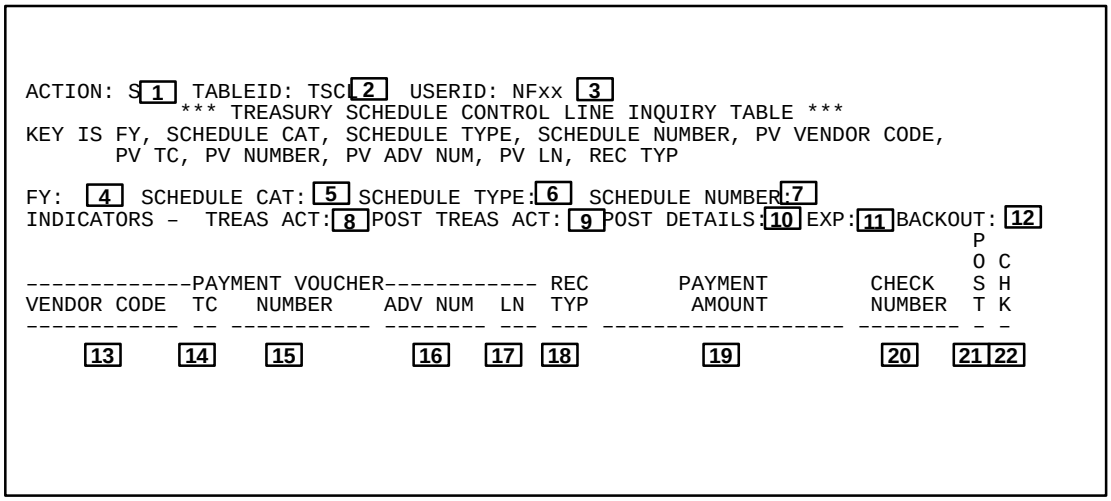

Figure 8:184. Treasury Schedule Control Line Inquiry Table (TSCL)

Note: Fields [13] through [16] relate to payment vouchers.

[13] **Vendor Code** 🔑. Displays the vendor code for the payment voucher to which this Treasury schedule control line applies.

[14] **TC** 🔑. Displays the transaction code associated with this payment voucher.

[15] **Number** 🔑. Displays the transaction code number associated with this payment voucher.

[16] **Adv Num** 🔑. Displays the number from the Travel Order document that identifies the advance. This is used to reference an accounting distribution. Applies to Travel Order transactions only.

[17] **Ln** 🔑. Displays the voucher line number.

[18] **Rec Typ** 🔑. Displays one of the following record types of the voucher line:

P	=	Payment
C	=	Credit
D	=	Discount Taken (Spend)
M	=	Discount Taken (Memo)
L	=	Discount Lost (Memo)
I	=	Interest
X	=	Penalty

[19] **Payment Amount.** Displays the voucher line payment amount related to the record type indicated.

[20] **Check Number.** Displays the payment sequence number for the line, if Treasury confirmation of the payment line has not yet been posted. Displays the check or EFT sequence number assigned to the payment, if Treasury confirmation has been posted. This field is also updated by the Treasury Reconciliation process.

[21] **Post.** Displays an indicator whether or not the Treasury confirmation or rejection of the payment line has been posted. This field is updated by the Treasury Reconciliation process only.

[22] **Chk.** Displays an indicator for ACH payment schedules (schedules category of ***A***) whether or not the ACH payment line sent to Treasury was actually made by check payment. This field is updated by the Treasury Reconciliation process only.

After viewing the data, you have several options, as described below:

- To view another record, repeat the above process.
- To view another table, key in ***N*** at the Action field and the applicable table ID at the TableID field, then press [Enter].
- To access a document screen, key in ***L*** at the Action field and the applicable document transaction code at the TableID field. Use the [Space Bar] to erase the remaining 2 characters, then press [Enter].
- To exit the system, follow the sign-off instructions under **Part 2, Accessing The System**.

Travel Voucher Accounting Line Inquiry Table (TVAT)

The TVAT is used to view detailed travel expense information, from the travel voucher, travel–related payment voucher, and travel expense imprest fund reimbursements.

To access the TVAT, at the FFS screen, key in ***N*** at the Action field and ***TVAT*** at the TableID field, then press [Enter]. The TVAT screen (**Figure 8:185**) is displayed with an ***S*** in the Action field.

Displaying A Record. For instructions on displaying a record, see **Part 2, Using Tables**.

The fields on the TVAT are listed below with an explanation of each:

1 **Action.** Displays ***S***.

2 **TableID.** Displays ***TVAT***.

3 **UserID.** Displays the user ID.

4 **Employee Code** 🔑. Displays the identification number of the traveler for whom this voucher is being paid.

5 **Trans Code** 🔑**.** Displays the transaction code for this travel voucher.

6 **Voucher Number Type** 🔑. Displays the number assigned to the travel voucher.

7 **Line Number** 🔑. Displays the number that identifies each accounting line.

8 **Line Type**. Displays one of the following:

E = Expense
O = Owed to employee
T = Tax withheld

9 **Ref Trans Code.** Displays the transaction code for the travel order that obligated funds for the travel.

10 **Ref Trans Number.** Displays the document number of the travel order that obligated funds for the travel.

11 **Ref Line No.** Displays the travel order line number that obligated funds for the expense. If the expense amount is associated with the whole travel order, and not a specific line, ***MMM*** will be displayed.

12 **Budget Org/Sub.** Displays the budget org/sub accounting distribution for this line.

13 **Budget FYs**. Displays the budget fiscal year accounting distribution for this line.

14 **Fund**. Displays the fund accounting distribution for this line.

15 **Cost Org/Sub**. Displays the cost org/sub accounting distribution for this line.

16 **Program**. Displays the program accounting distribution for this line.

17 **Job Number**. Displays the job number accounting distribution for this line.

18 **Object Code/Sub**. Displays the object code/sub accounting distribution for this line.

19 **Travel Type.** Displays the type of travel with which this accounting line is associated.

```
ACTION:S[1] TABLEID:TVAT[2]  USERID: NFXX[3]
            *** TRAVEL VOUCHER ACCOUNTING LINE INQUIRY TABLE ***
KEY IS EMPLOYEE CODE, TRANS CODE, VOUCHER NUMBER, LINE NO

EMPLOYEE CODE:[4]            TRANS CODE:[5]   VOUCHER NUMBER:[6]

01- LINE NO:[7]                  LINE TYPE:[8]
      REF TRANS CODE:[9]   REF TRANS NUMBER:[10]        REF LINE NO:[11]
      BUDGET ORG/SUB:[12]        BUDGET FYS:[13]              FUND:[14]
        COST ORG/SUB:[15]           PROGRAM:[16]         JOB NUMBER:[17]
     OBJECT CODE/SUB:[18]       TRAVEL TYPE:[19]           TAX CODE:[20]
     REPORT CATEGORY:[21]       CLOSED BFYS:[22]       CLOSED FUND:[23]
    DESCRIPTION CODE:[24]
      EXCEPTION CODE:[25]    CLAIMED AMOUNT:[26]

                        *** TRAVEL RELATED INFORMATION ***
    VENDOR INVOICE/LINE:[27]                 REF VENDOR CODE:[28]
      MEMO REF TRANS ID:[29]                DISBURSING OFFICE:[30]
            DESCRIPTION:[31]
```

Figure 8:185. Travel Voucher Accounting Line Inquiry Table (TVAT)

[20] **Tax Code.** Displays the code the indicates which row (if any) in the Employee Moving Expense Information (IRS For 4782) this reimbursement is to appear.

[21] **Reporting Category.** Displays the reporting category accounting distribution for this line.

[22] **Closed BFYs.** Displays the budget fiscal years of the canceled appropriation referenced by this document.

[23] **Closed Fund**. Displays the fund of the canceled appropriation referenced by this document.

[24] **Description Code**. Displays the code that describes the nature of the expense.

[25] **Exception Code**. Displays the code that identifies the nature of the exceptions taken to this accounting line.

[26] **Claimed Amount**. Displays the amount of the expense for this accounting line (actual cost).

[27] **Vendor Invoice/Line**. Displays the invoice number used by the vendor for identification.

[28] **Ref Vendor Code**. Displays the third party vendor who is paid by the travel related payment voucher.

[29] **Memo Ref Trans ID**. Displays the order being liquidated by this accounting line in the travel related payment voucher.

[30] **Disbursing Office**. Displays the code of the disbursing office.

[31] **Description**. Displays the text description of the expense in this accounting line.

After viewing the data, you have several options, as described below:

- To view another record, repeat the above process.
- To view another table, key in ***N*** at the Action field and the applicable table ID at the TableID field, then press [Enter].
- To access a document screen, key in ***L*** at the Action field and the applicable document transaction code at the TableID field. Use the [Space Bar] to erase the remaining 2 characters, then press [Enter].
- To exit the system, follow the sign-off instructions under **Part 2, Accessing The System**.

Travel Voucher Header Inquiry Table (TVHT)

The TVHT is used to view summary data from the travel voucher, travel related payment voucher and, travel expense lines in the imprest fund reimbursement document.

To access the TVHT, at the FFS screen, key in ***N*** at the Action field and ***TVHT*** at the TableID field, then press [Enter]. The TVHT screen (**Figure 8:186**) is displayed with an ***S*** in the Action field.

Displaying A Record. For instructions on displaying a record, see **Part 2, Using Tables**.

The fields on the TVHT are listed below with an explanation of each:

1 **Action.** Displays ***S***.

2 **TableID.** Displays ***TVHT***.

3 **UserID.** Displays the user ID.

4 **Employee Code** 🔑. Displays the identification number of the traveler requesting reimbursement

5 **Trans Code** 🔑**.** Displays the transaction code assigned to the voucher.

6 **Voucher Number Type** 🔑. Displays the number assigned to the voucher.

7 **Mileage**. Displays the number for which reimbursement is sought.

8 **Number of Days**. Displays the number of days the travel voucher covers.

9 **Begin Date.** Displays the starting date for the travel covered by the voucher.

10 **Mileage Cost.** Displays the amount of total mileage reimbursement.

11 **BFYs.** Displays the last 2 digits of the budget fiscal year to which the document applies.

12 **End Date.** Displays the ending date for the travel covered by the voucher.

13 **Acctg Pd**. Displays the accounting period associated with the voucher.

14 **Fund**. Displays the fund code appropriate for the voucher.

15 **Trans Date**. Displays the date for the voucher.

16 **Home Org**. Displays the organization to which the employee was assigned at the time the voucher was processed.

17 **Travel Purpose**. Displays the codes that describes the purpose or purposes of the travel associated with this travel voucher.

18 **Orig Date**. Displays the original date associated with the voucher.

19 **Exception Code.** Displays the code that identifies the nature of the exceptions taken to this voucher.

20 **Tran Type.** Displays the transaction type appropriate for the dollar amount being entered for the travel reimbursement.

21 **Voucher Type.** Displays the code that corresponds to the voucher type applicable to this travel voucher.

22 **Name.** Displays the employee name.

```
  ACTION:S 1 TABLEID:TVHT 2   USERID: NFXX  3
              *** TRAVEL VOUCHER HEADER INQUIRY TABLE ***
KEY IS EMPLOYEE CODE, TRANS CODE, VOUCHER NUMBER
 EMPLOYEE CODE 4              TRANS CODE: 5    VOUCHER NUMBER: 6
       MILEAGE 7          NUMBER OF DAYS: 8        BEGIN DATE: 9
  MILEAGE COST:10                 BFYS: 11          END DATE: 12
      ACCTG PD:13                 FUND: 14        TRANS DATE: 15
      HOME ORG:16          TRAVEL PURPOSE: 17       ORIG DATE: 18
EXCEPTION CODE:19              TRANS TYPE: 20     VOUCHER TYPE: 21
NAME: 22                                    DOCUMENT TOTAL:23
ADDR: 24                                 TOTAL VERIFIED AMT:25
                                              TICKET AMOUNT:26
                                           TAXABLE AMOUNT:27
EXCEPTION AMOUNT:28                           WTA AMOUNT:29
PAID TO EMPLOYEE:30                      TAX WITHHELD AMT:31
COMMENTS TO PRINT: 32
  TTYP  TRAVEL ORDER  ADV NUM    APPLIED AMOUNT   DESCRIPTION
  ____ _____________ _______ ________________  ____________
1)33        34          35          36            37
2)
3)
SCHEDULE NUMBER:38          SCHEDULE FY:39  SCHEDULE CAT: 40
    PRINT CHECK:41        NO CHECK DISB:42   DISB OFFICE: 43
```

Figure 8:186. Travel Voucher Header Inquiry Table (TVHT)

[23] **Document Total**. Displays the total dollar amount for this voucher document. This is equal to the total verified plus the ticket amount.

[24] **Addr**. Displays the address.

[25] **Total Verified Amt**. Displays the sum of all actual costs in the accounting lines whose description codes indicated they were paid for by the traveler.

[26] **Ticket Amount**. Displays the sum of the amounts entered in the ticket lines for this travel voucher.

[27] **Taxable Amount**. Displays the amount of this voucher which is subject to tax.

[28] **Exception Amount**. Displays the amount of exceptions taken t o this voucher.

[29] **WTA Amount**. Displays the amount of WTA entered in the accounting line.

[30] **Paid to Employee**. Displays the amount of the voucher actually paid to the traveler. This is equal to the total verified minus any taxes withheld minus all moneys applied to advance.

[31] **Tax Withheld Amt**. Displays the amount of tax withheld or to be withheld.

[32] **Comments to Print**. Displays the comments to print entered for the travel voucher.

The following five fields concern travel advance applications, up to three different travel orders/types may be referenced by one travel voucher, and each element described below occurs in all three advance line.

[33] **TTYP**. Displays the advance type(s) against which this voucher is to be applied.

[34] **Travel Order.** Displays the travel order(s) against which this voucher is to be applied. This field will be set to blank if obligations are prohibited against this travel type (i.e., central and decentral flags in the TTYP are both **N**).

[35] **Adv Num**. Displays the number(s) that identifies the advance(s) against which this voucher is to be applied. This is used to allow the advance liquidation to reference an accounting distribution. This field may be blank.

[36] **Applied Amount**. Displays the amount(s) to be applied against the travel advances for this travel order (obligated travel), or travel type (unobligated travel).

[37] **Description**. Displays the text describing the advance application.

[38] **Schedule Number**. Displays the agency–assigned SF–1166 schedule number.

[39] **Schedule FY**. Displays the fiscal year of the SF–1166 schedule used to pay the reimbursement.

[40] **Schedule Cat**. Displays one of the category of the SF–1166 schedule used to pay the reimbursement:

T = Automated Treasury schedule
M = Manual Treasury schedule
S = TFCS payment
A = ACH payment

[41] **Print Check**. Displays one of the following:

Y = If the check will not be printed
N = If the check is to be printed via a manual SF–1166 schedule

[42] **No Check Disb**. Displays one of the following:

Y = If this payment has no check number associated with it
N = If it is associated with a check number

[43] **Disb Office**. Displays the Treasury disbursing office that will be paying for this voucher.

After viewing the data, you have several options, as described below:

- To view another record, repeat the above process.
- To view another table, key in ***N*** at the Action field and the applicable table ID at the TableID field, then press [Enter].
- To access a document screen, key in ***L*** at the Action field and the applicable document transaction code at the TableID field. Use the [Space Bar] to erase the remaining 2 characters, then press [Enter].
- To exit the system, follow the sign-off instructions under **Part 2, Accessing The System**.

Payment Voucher Line – Check Number Cross-Reference Inquiry Table (VCHK)

The VCHK is used to view:

- Information that links voucher lines to the associated check number.
- The payment amount and check number.

To access the VCHK, at the FFS screen, key in ***N*** at the Action field and ***VCHK*** at the TableID field, then press [Enter]. The VCHK screen (**Figure 8:187**) is displayed with an ***S*** in the Action field.

Displaying A Record. For instructions on displaying a record, see **Part 2, Using Tables**.

The fields on the VCHK are listed below with an explanation of each:

[1] **Action.** Displays ***S***.

[2] **TableID.** Displays ***VCHK***.

[3] **UserID.** Displays the user ID.

Note: Fields [4] through [14] are updated by the Check Posting process and the Treasury Reconciliation process.

[4] **Vendor Code** 🔑. Displays the vendor code of the voucher.

[5] **TC** 🔑**.** Displays the transaction code of the voucher.

[6] **Number** 🔑. Displays the document number of the voucher.

[7] **Travel Advance Num** 🔑. Displays the number that identifies the travel advance. This is used to reference an accounting distribution.

[8] **Ln** 🔑. Displays the voucher line number.

[9] **Rec Typ** 🔑. Displays the record type of the voucher line.

[10] **D.O.** 🔑. Displays the code number of the Treasury disbursing office that issued the check.

[11] **Check Number** 🔑. Displays the check number.

[12] **Man Chk Ind.** Displays ***Y*** if the check was issued by a manual check transaction.

[13] **Check Date.** Displays the date the check was issued.

[14] **Amount.** Displays the voucher line payment amount.

After viewing the data, you have several options, as described below:

- To view another record, repeat the above process.
- To view another table, key in ***N*** at the Action field and the applicable table ID at the TableID field, then press [Enter].
- To access a document screen, key in ***L*** at the Action field and the applicable document transaction code at the TableID field. Use the [Space Bar] to erase the remaining 2 characters, then press [Enter].
- To exit the system, follow the sign-off instructions under **Part 2, Accessing The System**.

```
ACTION: S [1]  TABLEID: VCHK [2]  USERID: NFxx [3]
*** PAYMENT VOUCHER LINE – CHECK NUMBER CROSS-REFERENCE INQUIRY TABLE ***
KEY IS VENDOR CODE, TC, NUMBER, TRAVEL ADVANCE NUM, LN, REC TYPE,
     D.O., CHECK NUMBER
VENDOR CODE: [4]          TC: [5] NUMBER: [6]         TRAVEL ADVANCE NUM: [7]

                                MAN
       REC                      CHK   CHECK
   LN  TYP D.O. CHECK NUMBER    IND   DATE          AMOUNT
   --- --- ---- ------------    --- -------- --------------------
01- [8] [9] [10]     [11]       [12]   [13]            [14]
02-
03-
04-
05-
06-
07-
08-
09-
10-
11-
```

Figure 8:187. Payment Voucher Line-Check Number Cross-Reference Inquiry Table (VCHK)

Voucher Tracking Inquiry Table (VCTI)

The VCTI is used to view information about invoices being tracked by FFIS.

To access the VCTI, at the FFS screen, key in ***N*** at the Action field and ***VCTI*** at the TableID field, then press [Enter]. The VCTI screen (**Figure 8:188**) is displayed with an ***S*** in the Action field.

Displaying A Record. For instructions on displaying a record, see **Part 2, Using Tables**.

The fields on the VCTI are listed below with an explanation of each:

[1] **Action.** Displays ***S***.

[2] **TableID.** Displays ***VCTI***.

[3] **UserID.** Displays the user ID.

Note: Fields [4] through [37] are updated by direct entry to the VCTE and FFIS documents with the Doc Track Number field in the TCAT set to **Y**.

[4] **Payee** 🔑. Displays the payee code for this invoice.

[5] **DOC Number** 🔑. Displays the number associated with this document. This number is used by the system to reference this document tracking record.

[6] **Doc Date** 🔑. Displays the date of record for the document to be tracked.

[7] **Travel Type.** Displays the appropriate travel type for travel vouchers.

[8] **Responsibility Code.** Displays the code that identifies the person responsible for this document. The codes are defined in the RESP.

[9] **Name.** Displays the name of the person associated with the responsibility code.

[10] **Div.** Displays the division code derived from the RESP based on the responsibility code.

[11] **Amount.** Displays the amount of this document.

[12] **Payee Name.** Displays the name of the payee associated with the payee code.

[13] **Dupl.** Displays ***Y*** if another Document Tracking table with the same payee code and document number already existed when this document was entered. It is used by the payment voucher program to trigger an edit for duplicate payments.

[14] **Disc Days.** Displays the number of days from the document date before which the discount expires.

[15] **Accept Days.** Displays the delivery date for the goods and services described in this document.

[16] **Desc.** Displays a description of the tracked document.

[17] **Log Date.** Displays the date on which this document was recognized as being received by the proper receiving authority.

[18] **Last Pay Date.** Displays the last date on which this document must be paid based on the established scheduling options.

```
ACTION: S [1]   TABLEID: VCTI [2]   USERID: NFxx [3]
                  *** VOUCHER TRACKING INQUIRY TABLE ***
KEY IS PAYEE, DOC NUMBER, DOC DATE, LN
PAYEE: [4]          DOC NUMBER:  [5]       DOC DATE: [6]       TRAVEL TYPE: [7]
RESPONSIBILITY CODE: [8]  NAME: [9]                          DIV: [10]
AMOUNT: [11]                  PAYEE NAME: [12]                          DUPL: [13]
DISC DAYS: [14]  ACCEPT DATE: [15]      DESC: [16]
LOG DATE:  [17]      LAST PAY DATE: [18]      LAST DISC DATE: [19]
AUDIT [20]  EXCEPT DAYS: [21]   LAST ACTIVITY DATE: [22]      STATUS:  [23]
                                                 LAST LINE NUM: [24]
----------  REFERENCE DOC ----------        PROCESS AMOUNT: [25]
TC    NUMBER          TC    NUMBER
[26]  [27]

       TRACKING ACTV   ACTV      ENTERED     TO/          REAS
    LN    ORG   CODE   DATE        BY       FROM   ORG   CODE DUE DATE ACT DATE
   --- ------- ---- -------- ------------ ---- ------- ---- -------- --------
01- [28]   [29]  [30]   [31]       [32]     [33]  [34]  [35]   [36]      [37]
02-
03-
```

Figure 8:188. Voucher Tracking Inquiry Table (VCTI)

19 **Last Disc Date.** Displays the last date on which this document can be paid and still take any applicable discount.

20 **Audit.** Displays ***Y*** based on the parameters set in the AUDT if this travel voucher is pre-audited before being accepted.

21 **Except Days.** Displays the number of exception days for documents subject to prompt payment.

22 **Last Activity Date.** Displays the last date on which any action was taken on this document.

23 **Status.** Displays the status of the document: ***Logged***, ***In Process***, ***Canceled***, or ***Processed***.

24 **Last Line Num.** Displays the line number of the last tracking line added for this document.

25 **Process Amount.** Displays the dollar amount of any document updating a tracking record is added to this amount.

26 **TC (Reference Doc).** Displays the transaction code of the document ID of any reference documents.

27 **Number (Reference Doc).** Displays the number of the document ID of any referenced documents.

28 **Ln** 🔑. Displays the number for each line from ***001*** to ***999***.

29 **Tracking Org.** Displays the code for the organization tracking the document. This code is used to limit access to only authorized users. Multiple organizations may track the same document with each organization maintaining security over their individual tracking records. When documents create processed activity lines, they attempt to use the organization code from the document. If no organization code is available, the appropriate default tracking organization is derived from the SOPT.

30 **Actv Code.** Displays the activity code appropriate for this line.

31 **Actv Date.** Displays the date associated with the activity line.

32 **Entered By.** Displays the name of the individual entering this activity line. **Note:** If this line was created by the system (i.e., activity code is ***PROC***), the field contains the transaction code and document number of the document creating this line.

33 **To/From.** Displays the code of the person or group to whom the document is being sent (if this is a "To line") or received from (if this is a "From line").

34 **Org.** Displays the code of the organization to which the document is being sent (if this is a "To line") or received from (if this is a "From line").

35 **Reas Code.** Displays the reason code appropriate for this activity line.

36 **Due Date.** Displays the due date for this activity line.

37 **Act Date.** Displays the actual date associated with the activity line. This date is used to determine discrepancies between due date and actual date for productivity reporting.

After viewing the data, you have several options, as described below:

- To view another record, repeat the above process.
- To view another table, key in ***N*** at the Action field and the applicable table ID at the Table ID field, then press [Enter].
- To access a document screen, key in ***L*** at the Action field and the applicable document transaction code at the TableID field. Use the [Space Bar] to erase the remaining 2 characters, then press [Enter].
- To exit the system, follow the sign-off instructions under **Part 2, Accessing The System**.

Vendor Name Inquiry Table (VNAM)

The VNAM is used to view all the vendors identified in the system by vendor name and vendor code if the Vendor Table Updates Vndr Name Tbl option in the SOPT is ***Y***.

To access the VNAM, at the FFS screen, key in ***N*** at the Action field and ***VNAM*** at the TableID field, then press [Enter]. The VNAM screen (**Figure 8:189**) is displayed with an ***S*** in the Action field.

Displaying A Record. For instructions on displaying a record, see **Part 2, Using Tables**.

The fields on the VNAM are listed below with an explanation of each:

[1] **Action.** Displays ***S***.

[2] **TableID.** Displays ***VNAM***.

[3] **UserID.** Displays the user ID.

Note: Fields [4] through [10] are updated by the VEND.

[4] **Vendor Name** 🔑. Displays the name of the vendor (or the Vendor Name Xref) as it appears in the VEND.

[5] **Vendor Code** 🔑. Displays the code of the vendor as it appears in the VEND.

[6] **Vendor Type**. Displays the vendor type, as defined in the VTYP.

[7] **Vendor Type Category.** Displays the vendor type category applicable to this vendor type:

- ***G*** = Government
- ***N*** = Non-Government
- ***E*** = Employee
- ***S*** = State Government

[8] **Addr Line 1.** Displays the first line of the vendor's address.

[9] **Addr Line 2.** Displays the second line of the vendor's address.

[10] **Addr Line 3.** Displays the third line of the vendor's address. Includes the city, abbreviated state code, and zip code.

After viewing the data, you have several options, as described below:

- To view another record, repeat the above process.
- To view another table, key in ***N*** at the Action field and the applicable table ID at the Table ID field, then press [Enter].
- To access a document screen, key in ***L*** at the Action field and the applicable document transaction code at the TableID field. Use the [Space Bar] to erase the remaining 2 characters, then press [Enter].
- To exit the system, follow the sign-off instructions under **Part 2, Accessing The System**.

```
ACTION: S [1]  TABLEID: VNAM [2]  USERID: NFxx [3]
                      *** VENDOR NAME INQUIRY TABLE ***
KEY IS VENDOR NAME, VENDOR CODE
01-
    VENDOR NAME: [4]                          VENDOR CODE: [5]
    VENDOR TYPE: [6]                VENDOR TYPE CATEGORY: [7]
    ADDR LINE 1: [8]
    ADDR LINE 2: [9]
    ADDR LINE 3: [10]
02-
    VENDOR NAME:                              VENDOR CODE:
    VENDOR TYPE:                    VENDOR TYPE CATEGORY:
    ADDR LINE 1:
    ADDR LINE 2:
    ADDR LINE 3:
03-
    VENDOR NAME:                              VENDOR CODE:
    VENDOR TYPE:                    VENDOR TYPE CATEGORY:
    ADDR LINE 1:
    ADDR LINE 2:
    ADDR LINE 3:
```

Figure 8:189. Vendor Name Inquiry Table (VNAM)

Vendor Prior Calendar Year Disbursement Amount Inquiry Table (VPYA)

The VPYA is used to view total dollar amounts of disbursements for the prior calendar year by vendor for 1099 vendors only.

To access the VPYA, at the FFS screen, key in ***N*** at the Action field and ***VPYA*** at the TableID field, then press [Enter]. The VPYA screen (**Figure 8:190**) is displayed with an ***S*** in the Action field.

Displaying A Record. For instructions on displaying a record, see **Part 2, Using Tables**.

The fields on the VPYA are listed below with an explanation of each:

[1] **Action.** Displays ***S***.

[2] **TableID.** Displays ***VPYA***.

[3] **UserID.** Displays the user ID.

Note: Fields [4] through [6] are updated by the ACVPYA batch program.

[4] **Calendar Year** 🔑. Displays the calendar year in which the disbursement occurred.

[5] **Vendor** 🔑**.** Displays the code of the vendor to which the disbursement was made.

[6] **Disbursement Amount.** Displays the 1099 calendar year-to-date disbursement amount to this vendor.

After viewing the data, you have several options, as described below:

- To view another record, repeat the above process.
- To view another table, key in ***N*** at the Action field and the applicable table ID at the TableID field, then press [Enter].
- To access a document screen, key in ***L*** at the Action field and the applicable document transaction code at the TableID field. Use the [Space Bar] to erase the remaining 2 characters, then press [Enter].
- To exit the system, follow the sign-off instructions under **Part 2, Accessing The System**.

```
ACTION: S  [1] TABLEID: VPYA [2] USERID: NFxx  [3]

     *** VENDOR PRIOR CALENDAR YEAR DISBURSEMENT AMOUNT INQUIRY TABLE ***
KEY IS CALENDAR YEAR, VENDOR

    CALENDAR YEAR            VENDOR            DISBURSEMENT AMOUNT
    -------------          ------------        -------------------
01-    [4]                    [5]                    [6]
02-
03-
04-
05-
06-
07-
08-
09-
10-
11-
12-
13-
14-
15
```

Figure 8:190. Vendor Prior Calendar Year Disbursement Amount Inquiry Table (VPYA)

Payment Voucher Line – Disb Document Cross Reference Inquiry Table (VXDD)

The VXDD is used to view:

- Information that links voucher lines to the associated Treasury schedules on which the vouchers appear.
- Payment amount and schedule status.

To access the VXDD, at the FFS screen, key in ***N*** at the Action field and ***VXDD*** at the TableID field, then press [Enter]. The VXDD screen (**Figure 8:191**) is displayed with an ***S*** in the Action field.

Displaying A Record. For instructions on displaying a record, see **Part 2, Using Tables**.

The fields on the VXDD are listed below with an explanation of each:

[1] **Action.** Displays ***S***.

[2] **TableID.** Displays ***VXDD***.

[3] **UserID.** Displays the user ID.

Note: Fields [4] through [12] are updated by the Schedule Posting process.

[4] **Vendor Code** 🔑. Displays the code of the vendor which the disbursement was made.

[5] **TC** 🔑**.** Displays the transaction code of the voucher.

[6] **Number** 🔑. Displays the transaction number of the voucher.

[7] **Travel Advance Num** 🔑. Displays travel order transactions only.

[8] **Ln** 🔑. Displays the voucher line number.

[9] **Rec Typ** 🔑. Displays one of the following record types of the voucher line:

P	=	Payment
C	=	Credit
D	=	Discount Taken (Spend)
M	=	Discount Taken (Memo)
L	=	Discount Lost (Memo)
I	=	Interest
X	=	Penalty

[10] **FY** 🔑. Displays the fiscal year of the Treasury schedule.

[11] **Schedule Number** 🔑. Displays the schedule category, type, and agency schedule number.

[12] **Amount.** Displays the voucher line payment amount related to the record type indicated.

[13] **Treas Act Ind.** Displays the code indicating Treasury confirmation, rejection, or neither for the schedule. This field is updated by the Treasury Reconciliation process.

[14] **Post Treas Ind.** Displays ***Y*** if the Treasury Reconciliation process has posted confirmation accounting entries for this schedule. This field is updated by the Treasury Reconciliation process.

[15] **Post Det Ind.** Displays ***Y*** if the Treasury Reconciliation process has posted detail vouchers for this schedule This field is set to **Y** when any detail voucher is posted. The schedule is completely processed when the Post Treasury Action flag is **Y**, the Post Details flag is **Y**, and the Expended flag is **F**. This field is updated by the Treasury Reconciliation process.

```
ACTION: S[1] TABLEID: VXDD[2]  USERID: NFxx[3]
*** PAYMENT VOUCHER LINE – DISB DOCUMENT CROSS REFERENCE INQUIRY TABLE ***
KEY IS VENDOR CODE, TC, NUMBER, TRAVEL ADVANCE NUM, LN, REC TYP, FY,
       SCHEDULE NUMBER
VENDOR CODE: [4]          TC:[5] NUMBER: [6]         TRAVEL ADVANCE NUM: [7]

                                                  TREAS POST  POST       BACK
         REC       SCHEDULE                        ACT  TREAS DET  EXP  OUT
    LN   TYP FY     NUMBER           AMOUNT         IND  IND   IND  IND  IND
    ---  --- --  -------------- -------------------  ---  ----  ---  ---  ----
01- [8]  [9] [10]     [11]            [12]          [13]  [14] [15] [16] [17]
02-
03-
04-
05-
06-
07-
08-
09-
10-
11-
```

Figure 8:191. Payment Voucher Line-Disb Document Cross-Reference Inquiry Table (VXDD)

16 **Exp Ind.** Displays ***F*** (final) when the vouchered amount is equal to the confirmed amount. Otherwise, displays ***P*** (partially expended). This field is updated by the TSCH when the confirmed amount is entered after voucher details have been recorded for a schedule, or by the payment document processor when the confirmation is entered prior to processing the vouchers that were paid on the schedule.

17 **Back Out Ind.** Displays ***Y*** if a user has requested backout of the posted Treasury schedule. Displays ***A*** if backout has been accomplished for the schedule. Displays ***N***. if backout has not been requested for this schedule. This field is updated by the TSCH when the confirmed amount is entered after voucher details have been recorded for a schedule, or by the payment document processor when the confirmation is entered prior to processing the vouchers that were paid on the schedule.

After viewing the data, you have several options, as described below:

- To view another record, repeat the above process.
- To view another table, key in ***N*** at the Action field and the applicable table ID at the TableID field, then press [Enter].
- To access a document screen, key in ***L*** at the Action field and the applicable document transaction code at the TableID field. Use the [Space Bar] to erase the remaining 2 characters, then press [Enter].
- To exit the system, follow the sign-off instructions under **Part 2, Accessing The System**.

Vendor Document Cross Reference Inquiry Table (VXRF)

The VXRF is used to view:

- Information on all documents that refer to a given vendor if the Use Vendor XRef Table option in the SOPT is ***Y***.
- The document number, acceptance date, and total amount for each document.

To access the VXRF, at the FFS screen, key in ***N*** at the Action field and ***VXRF*** at the TableID field, then press [Enter]. The VXRF screen (**Figure 8:192**) is displayed with an ***S*** in the Action field.

Displaying A Record. For instructions on displaying a record, see **Part 2, Using Tables**.

The fields on the VXRF are listed below with an explanation of each:

[1] **Action.** Displays ***S***.

[2] **TableID.** Displays ***VXRF***.

[3] **UserID.** Displays the user ID.

Note: Fields [4] through [8] are updated by FFIS documents when a vendor code is entered.

[4] **Vendor** 🔑. Displays the vendor code supplied on the document.

[5] **Trans ID** 🔑. Displays the transaction identification that identifies the document processed using the particular vendor.

[6] **Acceptance Date** 🔑. Displays the date the document was accepted by FFIS.

[7] **Total Amount.** Displays the total dollar amount of the document.

After viewing the data, you have several options, as described below:

- To view another record, repeat the above process.
- To view another table, key in ***N*** at the Action field and the applicable table ID at the Table ID field, then press [Enter].
- To access a document screen, key in ***L*** at the Action field and the applicable document transaction code at the TableID field. Use the [Space Bar] to erase the remaining 2 characters, then press [Enter].
- To exit the system, follow the sign-off instructions under **Part 2, Accessing The System**.

```
ACTION: S [1] TABLEID: VXRF  [2]  USERID: NFxx  [3]
          *** VENDOR DOCUMENT CROSS REFERENCE INQUIRY TABLE ***
KEY IS VENDOR, TRANS ID, ACCEPTANCE DATE

VENDOR:  [4]


                          ACCEPTANCE            TOTAL
     TRANS ID               DATE                AMOUNT
   --------------       ----------       -----------------
01-    [5]                  [6]              [7]
02-
03-
04-
05-
06-
07-
08-
09-
10-
11-
```

Figure 8:192. Vendor Document Cross Reference Inquiry Table (VXRF)

PART 9.

APPENDIXES

a. Glossary A:1
b. Alphabetical Integrated Document List B:1
c. Functional Integrated Document List C:1
d. Alphabetical Interfaced Document List D:1
e. Functional Interfaced Document List E:1
f. Tables List F:1
g. Key Fields On The GIDT For Various Interfaces G:1
h. Rural Development FFIS Processing Matrix For Budget H:1
i. Rural Development FFIS Processing Matrix For Spending I:1
j. Rural Development FFIS Processing Matrix For Accounts Receivable J:1
k. Feeder System Purposes K:1
l. Summary of Feeder Transactions Listing L:1
m. Feeder System Procedural Reference M:1
n. Feeder System Input Forms N:1
o. OPAC Agency Requirements O:1

Glossary

absolute. See full control.

accepted document. An FFIS document that has (1) passed all system edits and (2) been used to update the FFIS tables. The *accepted* stage is the fourth and final stage in the document life-cycle.

accounting dimensions. The codes that define to FFIS the budget affected by a financial transaction. In addition, the accounting dimension fields capture cost accounting and reporting data for the transaction.

accounting distribution. See accounting strip.

accounting event. Describes the purpose of a transaction (e.g., obligation, expenditure, receivable) and determines whether the transaction represents an expense, a revenue, or a balance sheet transfer.

accounting lines. See lines.

accounting period. The combination of fiscal month and fiscal year.

accounting strip. The codes which define a funding source or a receipt account; must include the budget fiscal year, fund, division, and organization code but may also include an object code, a revenue source code, a program, a job number, or a reporting category.

accrual. A periodic, incremental recording or transfer of accounting information, generally for reporting purposes.

ACCS. Accounting Code Classification Structure; the combination of codes which constitute a budget line.

action. In MTI, a 1-character command that tells FFIS what to do.

action command. In the document processing environment, an action code used to assist with entering or editing a document.

action line. The first line of any table screen. It displays the current action, table ID, and user ID.

action line area. In the document processing environment, the first two lines of each document screen. These lines display information about the identity and status of the document.

actual recovery amount. The amount of the actual recovery when an obligation incurred in one fiscal year is decreased in a subsequent fiscal year.

actual reimbursement amount. The actual amount that an agency receives from other organizations for funds spent.

add (A). An MTI action that adds new entries to the current table.

advisory control. See presence control.

agency specific table. A table that contains values which meet the specific requirements of an individual agency. The values for agency specific tables are set and maintained at the agency level and may differ from agency to agency— e.g., Fund Program Combination Reference Table (FPCT).

allocation. The third level in the budget hierarchy for distribution of funds.

allocation groups. A unique and independent set of allocations.

allotment. The fourth level in the budget hierarchy for distribution of funds.

amendment document. A document that is created to modify or cancel an accepted document.

apportionment. The second level in the budget hierarchy; the authorization of funds by quarter.

appropriation. The highest level in the budget hierarchy; the authorization of funding from Congress.

approval. An authorization for a financial transaction; similar to an "electronic signature."

approval status code. A code on the Document Suspense File that indicates the status of the five possible levels of document approval. The five characters each represent one level of approval status.

approve and override (A). In the document processing environment, an action that applies an approval or override code to a document, providing the mechanism for overriding errors and electronically signing off on transactions.

availability. The dollar amount of authorized funding which has not been committed, obligated, or expended.

back (B). An MTI action that returns to the table you left when using the Leaf action.

background processing. A type of processing that allows you to continue working on other tasks–such as en-

tering new documents–while the system is processing documents.

background update (U). A scheduling action that causes FFIS to process a document in the background, allowing you to continue working on other tasks.

bases. The targets in the distribution process to which those costs are distributed.

batch. A group of similar documents entered in the system together.

batch number. An alphanumeric code of up to six characters that identifies one batch of documents in FFIS. The batch number is in the third and final component of the batch ID.

batch ticket.Those entry fields that precede all documents in a batch. The batch ticket usually captures control information for the batch (e.g., number of documents and total batch dollar amount.)

batching. The act of creating a group or batch of documents to be processed together.

billable customer. Provides funding for a project through the payment of bills or the application of advances.

budget. The order of funds authorization (appropriation, apportionment, allocation, allotment).

budget controls. System components that define how FFIS controls the entry of budget documents.

budget dimensions. The ACCS components which define a budget level; codes that represent how funds are distributed at each budget level and budget line.

budget document. A document that records an appropriation, apportionment, allocation, suballocation, allotment, revenue, or budget transfer.

budget fiscal year. The 12-month period for which an appropriation is authorized.

budget level. Any component of the budget hierarchy; a way of separating a fund into smaller portions.

budget line. See accounting strip.

budget object code. A 4-digit code used to classify expenses.

cancel batch (XB). An action command that erases all information entered for an entire batch. This action can only be used in the data entry mode.

cancel document (XD). An action command that erases all information entered for an entire document. This action can only be used in the data entry mode.

cancel screen (XS). An action command that erases all data fields entered on the screen. This action can only be used in the data entry mode.

cancellation document. An amendment document specifically created to cancel an accepted document.

carryover amount. The amount of a no-year appropriation that is carried over from one fiscal year to the next.

change (C). An MTI action that changes non-key data fields on existing table entries.

closed fund. An appropriation whose budget fiscal year(s) has been closed for five years.

combination table. A table that resides in the agency application, but one or more elements in the table are controlled by the Department (e.g., Vendor File Reference Table (VEND)).

commitment. The first step in the spending chain; the reservation of funds for an anticipated purchase.

common table. A table that contains a set of values that will be used by all agencies. Values for common tables are set and maintained at the Department level and are consistent and applicable to each agency (e.g., Budget Object Code Table (BOCT)).

conditional field. The user **may be required** to enter data, based on the criteria indicated in the field instructions.

contract holdback. A portion of a payment amount "held back" for payment at a later date.

control action. A type of MTI action used to control or navigate through the system.

correction mode. The document processing mode used to edit, or correct, the contents of an existing document or batch. The system does not validate the data as you make corrections.

cost allocation. The process of distributing costs or revenues from a cost pool to one or more target entities or bases.

credit voucher. A Payment Voucher Document (PV) with a negative total amount.

cursor. A solid box or underscore (often blinking) that shows you where you are on the display screen.

customer. A source of funding for cooperative agreements; any vendors, offices within your agency, or other agencies, that provide funding for a project.

data entry mode. The document processing mode used to create a document or batch. This mode supports entry activities only – the data is not subjected to any edits during the entry process.

data entry table. A table that is used to record recurring financial transactions and is sometimes referred to as *document creation tool*. The information entered does not have any accounting impact at the time of entry (e.g., recurring obligations associated with a type 43 purchase order). When information is added to this table, it does not directly update the journals. Instead, the system uses this data to build obligation documents at a later date, as specified by the user, to create accounting transactions. This table can be identified by the words *data entry* in the table title.

delete (D). An MTI action that removes selected entries from the current table.

delete batch (DB). A scheduling action that removes an entire batch of documents from the Document Suspense File.

delete document (DD).A scheduling action that removes individual documents from the Document Suspense File.

delete line (DL). An action command that removes specific lines from a document. This action can only be used in correction mode.

detail lines. See lines.

direct customer. A source which provide funds to a project directly through an appropriation.

disbursement. The release of funds (check, EFT, wire transfer) to a vendor.

discount. An agreement between an agency and a vendor stating that the agency will receive a discount on funds owed to the vendor if the agency pays the vendor in a specified period of time.

Discount Lost Reason Code. A code that represents the reason that the discount is lost.

display action. A type of MTI action that displays entries in the current table for query purposes.

division. A 4-digit code representing the highest level of the organizational structure. The second component of each document ID and batch ID in FFIS.

document. The FFIS medium for entering, correcting, and processing data in the system. Each document represents a financial transaction.

document action. A field located in the header area of each document that tells the system whether the document is an original entry, a modification, or a cancellation of a previously entered document.

document ID. A three-part code used to identify each document in FFIS. Each document ID consists of a transaction code, a sec1 code, and document number.

document life-cycle. . The four-stage cycle of an FFIS document that parallels the life-cycle of a form in an office. The stages of this cycle are: new, rejected, edited, and accepted.

document number. An alphanumeric code of up to 11 positions that identifies one document. The document number is the third and final component of each document ID.

document processing environment. The facility in FFIS used to enter, correct, process, and review documents.

document suspense file. A file that stores and maintains all documents entered in FFIS. The suspense file maintains documents at all stages of their life-cycle.

duplicate line (dup line). An action command that copy the previous entered line.

edit. The command which checks a document for errors.

edit document. An FFIS document that, when last processed, successfully met all edit criteria without errors. The edited stage is the third stage in the document life-cycle.

edit pass. The first pass in the FFIS two-pass processing of a document. In the edit pass, the system subjects the document to a series of edits or validation steps. The edit pass is often referred to as PASS1.

end. The command which terminates a document session and returns the user to tables.

[Enter]. The key that, when pressed, causes the system to acknowledge the information typed on the screen and act on it appropriately.

error document (ER). An action command that displays the next document in the batch with errors. The error document action can only be used in scan mode.

error line (EL). An action command that displays the next line in the document with errors. The error line action can only be used in scan mode.

error message. Information displayed on the screen to indicate that something is wrong, e.g., an invalid code was entered, or a required field was left blank. Error messages stop processing.

estimated reimbursement amount. The estimated amount that an agency plans to be reimbursed from other organizations for funds spent.

exit (E). An MTI action used to end an MTI session.

expenditure. The final step in the spending chain; the authorization of payment to a vendor.

expert mode. A time-saving feature for advanced users that lets you move quickly between documents and batches in the document processing environment.

expired fund. An appropriation whose budget fiscal year(s) is closed.

fatal error. An error that inhibits processing; the highest level of error issued by FFIS; identified by the letter "E" at the end of the error code.

Feeder Systems. Agency systems which will feed data into the FFIS system when FFIS implementation occurs.

FFIS. Foundation Financial Information System; the new, integrated accounting system that has been implemented by the Department.

FFIS password. A secret code, known only by the user, which verifies the user's identity to FFIS. This may or may not be the same as the user's system password.

FFIS user ID. An alphanumeric code that uniquely identifies the user to FFIS. It may or may not be the same as the system user ID.

FFS. Federal Financial System; the baseline accounting system from which FFIS is derived.

field. An area on the screen in which data is displayed or entered.

finish (F). An action command that leaves the document and returns to the startup screen.

fiscal year. The 12-month period in which a transaction occurs.

FISVIS. Financial Information Systems Vision and Strategy.

forward (F). An MTI action that returns to a table you leafed to earlier.

front end screen. The first screen you see when you access FFIS. You must choose whether to access Table Inquiry/Update (MTI) or exit.

full control. The strictest degree of funds control; issues an error when spending exceeds availability.

full screen clear (Y). An MTI action that clears every data field on the screen.

fund code. This code is used in combination with the budget fiscal year to uniquely identify an appropriation.

funds control. The invocation of specified spending controls.

get (G). An MTI action that finds and displays the entries in a table that have the key value(s) you enter on the screen.

GLID Code. A 5-digit code which determines the general ledger accounts to be updated by an accounting transactions.

header. The part of a transaction which contains summary information.

header data. For tables, the data elements common to all records shown on the screen.

hold (H). A scheduling action that prevents a document from being subject to further processing.

ignore. Performs no edit for funds availability; creates a budget line if one does not already exist.

imprest fund. A petty cash fund.

indirect cost. Costs or surcharges that occurred in another project or accounting distribution.

inquiry table. This table is automatically updated when documents are created and accepted. The results of these documents create header and line table records which are maintained for query purposes. The inquiry tables are sometimes referred to as *filing cabinets* and can be identified by the word *inquiry* in the table title.

insert document (ID). An action command that adds new documents to a batch. The insert document action can only be used in correction mode.

insert line (IL). An action command that adds new lines to a document. The insert line action can only be used in correction mode.

integrate. The ability to mix similar systems or data types into one whole.

interface. An automated process which updates an application with data transmitted in batch by another application.

invoice. The fourth step in the spending chain; the request for payment from a vendor.

job background table. The table that stores information entered on the job code setup tables. These tables have no corresponding screens and are not accessible to users online. Changes to and deletions from background tables are initiated by updates to the corresponding job code setup tables.

job number. A 9-digit code describing a project.

journal. Represents the official accounting activity and are used as input for reporting purposes. Journals are updated as each document is processed.

key field. The field, or combination of fields, used to differentiate unique records in a table.

key field list. The line on most table screens that lists the key fields for the table.

keyed. Sorted, in ascending order, on specific index fields.

lapsed amount. The unobligated portion of the expired appropriation that was returned to Treasury's account.

leaf (L). An MTI action that accesses a new table and displays the first entry in that table related to the data displayed in the original table.

leafing. The ability to display related table entires in other tables.

leafing action. A type of MTI action that displays related entries in other tables.

line data. For tables, the data elements that are not included in the header. These fields generally show the detail associated with each entry.

lines. The part of a transaction which contains detailed information, including the accounting strip.

liquidation. The reduction of a commitment or obligation by a subsequent step in the spending chain.

Master Table Inquiry (MTI). The facility used to access the online tables in FFIS. It allows you to display and modify table entries directly at your terminal.

menu system. A collection of screens in FFIS that provide access to the various inquiry and reference tables in the system.

message (M). An MTI action that displays the next set of messages on the screen. If more messages exist, FFIS defaults to this action automatically.

message code. A 5-digit code used by FFIS to uniquely identify each system, warning, error, and overrideable error message.

message text. A 30-character explanation of a situation encountered by the system during processing. The message text is displayed with each message code.

miscellaneous vendor codes. Used for trial suppliers or vendors that you use only once.

mmddyy. Month, day, and year.

mmqyy. Month, quarter, and year.

mmyy. Month and year.

mode. A 1-character code that indicates to the system your reason for accessing a particular document or batch of documents. The mode you see determines the processing and editing activities supported by the system.

modification document. An amendment document specifically created to modify an accepted document.

modify action. A type of MTI action that modifies the contents of the current table.

MTI. See Master Table Inquiry.

multi-year. Describes an appropriation which is authorized for more than one budget fiscal year.

new document. An FFIS document that has not yet been scheduled for processing. The new stage is the first stage in the document life-cycle.

next (N). In MTI, an action that accesses a new table and displays the table screen with the data fields blank. In the document processing environment, an action command that completes the data entry process for the current document in a batch and displays a new entry screen for the next document. When you use the next action in scan mode or correction mode, you can also specify the document to go to.

next document (ND). An action command that steps through a batch document-by-document and displays the header of each document.

next line (NL). An action command that moves a specific number of lines forward in a document.

next screen (>). In MTI, an action that steps forward through the screens most recently viewed.

no control. Performs no edits for funds availability or ACCS validity.

no entry field. The user **will not** enter data in the field. Note: The field instruction states the reason for *no entry* (e.g., the data is system generated, the field will not be used by the agency, etc.)

no-year fund. Describes an appropriation that does not expire at the end of a budget fiscal year.

object code. See budget object code.

obligation. The second step in the spending chain; the issuance of an order for goods or services.

offline (O). A scheduling action that causes a document to be processed in the next overnight processing cycle.

optional field. The user **may elect** to enter data in the field. If the field is left blank, no data is system generated.

optional default field. The user **may elect** to enter data in the field. If the field is left blank, the system generates a default entry.

organization. A 7-digit code representing an entity which reports the division.

organizational security code. A security code that defines an additional level of security in FFIS, allowing an agency to grant specific document processing permissions at the lowest levels within the organizational structure.

overage tolerance limits. Parameters that define the maximum dollar difference for documents in which the referencing document line amount exceeds the referenced document line amount.

override. The authorization to continue processing a financial transaction that has received overrideable errors within FFIS.

overrideable error. An error identified by the letter "O", that restricts but does not prohibit processing; less severe than a fatal error but more severe than a warning.

partial screen clear (X). An MTI action that clears all data fields on the screen except those used to locate related entries when a leafing action is used.

PASS1. See edit pass.

PASS2. See update pass.

pause (P). In MTI, an action that allows you to leave your MTI session temporarily. When you later re-access MTI, the screen you were using is displayed, exactly as you left it. In the document processing environment, a scheduling action that temporarily returns to the screen you left to access the document processing environment. When you later return, FFIS displays the exact screen you left when you entered the pause action.

personal computer or PC. A self-contained workstation that can operate independently of other systems.

pools. The collection of costs to be distributed in the Cost Allocation process.

presence control. A system constraint that issues an error when the ACCS specified on a spending transaction is invalid.

previous screen (<). An MTI action that steps back through the last four screens most recently viewed.

prior-year obligation. An obligation entered during a prior budget fiscal year.

prior-year recovery withdrawal amount. The amount of the actual recovery from a prior year.

process mode. The document processing mode that allows you to process a document or batch from the document entry and correction screen.

processing status code. A 5-character code on the Document Suspense File that indicates the status of a document or batch ticket.

program. A 7-digit code representing an entity which reports to the organization.

project. An entity that collects costs for items or services that your agency provides to customers.

Prompt Pay Act. A law that specifies that certain types of payments to private vendors must be paid within a specified number of days, usually 30 days, or when an agency receives the goods, or when an agency receives the invoice from the vendor.

quick edit (Q). A scheduling action that subjects a document to edit pass processing only, not an update pass.

receiving report. The third step in the spending chain; the receipt of goods.

reference. The facility which links one transaction to another.

reference table. A table that is used by the agency to define valid codes and system processing options in FFIS. These codes and values are used by FFIS for editing and control purposes. This table can be identified by the word *reference* in the table title.

refill (R). The action which allows users to view the next sequential record in a table.

regular vendor codes. Specify vendors that your agency uses on a regular basis.

rejected document. An FFIS document that contains errors found by the system when the document was last processed. The rejected stage is the second stage in the document life-cycle.

report. Printed output, in detail or summarized form, created from information maintained in the tables and journals.

reporting category. A 4-digit field which has no budgetary impact and is used for reporting purpose.

required field. The user **is required** to enter data in the field.

requisition. See commitment.

revenue source code. A 4-digit code used to classify revenues.

run (R). The command which edits a document and, if no errors are detected, updates the data base.

scan (S). An MTI action that displays successive entries in a table, starting with a given key or partial key value.

scan mode. The document processing mode used to review any document or batch without making changes or corrections.

schedule category. Defines the payment method to use to disburse all funds in a particular payment document.

schedule type. Specifies the type of Treasury schedule in which a payment should be included.

scheduling action. In the document processing environment, an instruction that tells the system how to process a document or batch of documents.

sec1. The first-level security group to which a user belongs; used to delimit a user's capabilities within the system.

security group. A "user-defined" group of FFIS tables and/or documents identified on entries in the Format Definition Table (FORM/FORT); any single document or table may belong to up to 4 different security groups.

single-year. Describes an appropriation which is authorized for only one budget fiscal year.

spending chain. The series of steps which comprise the procurement process (commitment, obligation, receiving report, invoice, and expenditure).

spending controls. System constraints that define how FFIS restricts the processing of spending documents against a budget line.

spending documents. Any document that records a commitment, obligation, or expenditure.

status codes. In the document processing environment, the four characters in the upper right-hand corner of each document screen that indicate the processing and scheduling results for the batch or document.

status line. A line at the bottom of the display screen that alerts you to various conditions, such as communications or keyboard problems, by displaying special symbols and words.

statutory reserve amount. The part of the appropriation held in reserve that cannot be spent.

steps. Parts of an allocation group that define the order in which allocations will take place.

suspense file. See document suspense file.

system message. A message that tells you what FFIS has done in response to an action you've taken.

system password. A secret code, known only by the user, which verifies the user's identity to the computer system.

system user ID. An alphanumeric code that uniquely identifies the user to the computer system.

table. A keyed list of sequential data that is stored in FFIS for reference, entry, or inquiry purposes.

tag. A one-or two-digit code that identifies a part of the screen as the action line, the batch ticket, header, or an

individual line. All messages include a tag that relates the message to one of these parts of the screen.

terminal. A computer workstation used exclusively to access a remote computer, such as an IBM mainframe.

top (T). An MTI action that scans for the first entry in the table.

transaction code. A 2-character code that identifies the type of document or transaction. Often the transaction code is an acronym for the document type. The transaction code is the first component of each document ID and batch ID.

transaction type. A code that specifies the accounting event (e.g., commitment, obligation, expenditure) and the related general ledger postings to be generated by a document.

underage tolerance limits. Parameters that define the maximum dollar difference for documents in which the referencing document line amount is less than the referenced document line amount.

update pass. The second pass in the FFIS two-pass processing of a document. In the update pass, the system posts the data captured on the document to journal files and inquiry tables. The update pass is often referred to as a PASS2.

update wait (W). A scheduling action that processes a document immediately through the edit and update passes. A terminal is locked from further activity until the document is processed.

warning message. A message to advise you of a situation that may need further attention. Warning messages do not stop processing.

yyqmm. Year, quarter, and month.

zoom (Z). An MTI action that freezes the current MTI session and starts another allowing you to display or modify data in other tables.

Alphabetical Integrated Document List

ID	Document	Function
AA	Appropriation and Apportionment Document	Budget And Funds Control
BE	Budget Execution Document (Allocation)	Budget And Funds Control
BL	Budget Execution Document (Allotment)	Budget And Funds Control
CM	Standard Voucher Clone Document	Spending
DD	Direct Disbursement Document	Spending
JV	Journal Voucher Document	General Ledger
MO	Miscellaneous Order Document	Spending
PA	Apportionment Approval Document	Budget And Funds Control
PV	Payment Voucher Document	Spending
RQ	Requisition Document	Spending
SA	Suballotment Document	Budget And Funds Control
SV	Standard Voucher Document	General Ledger
TG	Training Order Document	Spending

Functional Integrated Document List

Function	ID	Document
Budget And Funds Control	AA	Appropriation and Apportionment Document
Budget And Funds Control	BE	Budget Execution Document (Allocation)
Budget And Funds Control	BL	Budget Execution Document (Allotment)
Budget And Funds Control	PA	Apportionment Approval Document
Budget And Funds Control	SA	Suballotment Document
General Ledger	JV	Journal Voucher Document
General Ledger	SV	Standard Voucher Document
Spending	DD	Direct Disbursement Document
Spending	CM	Standrad Voucher Clone Document
Spending	MO	Miscellaneous Order Document
Spending	PV	Payment Voucher Document
Spending	RQ	Requisition Document
Spending	TG	Training Order Document

Alphabetical Interfaced Document List

ID	Document	Function
A1	ABCO Billing Document	Accounts Receivable
A2	ABCO Regular Collection Cash Receipt Document	Accounts Receivable
A3	ABCO Voluntary Collection Cash Receipt Document	Accounts Receivable
DF	FTSP Direct Disbursement Document	Spending
DM	MPOL No-Check Disbursement Document	Spending
EA	PRCH Type 40 Receiver Document	Spending
FO	FEDS Miscellaneous Order Document	Spending
FV	FEDS Payment Voucher Document	Spending
GA	PRCH Miscellaneous Order Document	Spending
GC	PRCH Miscellaneous Order Document	Spending
GD	PRCH Miscellaneous Order Document	Spending
G1	GVTS Payment Voucher Document	Spending
G2	GVTS Transportation Invoice Document	Spending
G3	GVTS Standard Voucher Document	Spending
KA	PRCH OPAC Payable Document	Spending
KD	PRCH OPAC Payable Document	Spending
OD	FEDSTRIP Document	Spending
SE	TELE Standard Voucher Document	Spending
SF	FEDS Standard Voucher Document	Spending
SP	PRCH Standard Voucher Document	Spending
SU	UTVN Document	Spending
T1	TRAN Transportation Invoice Document	Spending
T2	TRAN Transportation Invoice Document	Spending
UV	UTVN Document	Spending
VA	PRCH Payment Voucher Document	Spending
VC	PRCH Payment Voucher Document	Spending
VD	PRCH Payment Voucher Document	Spending
VE	PRCH Payment Voucher Document	Spending
VF	FTSP Accrual/Suspense Document	Spending
VM	MPOL Suspense Document	Spending
VT	TELE Payment Voucher Document	Spending
V2	PCMS Payment Voucher Document	Spending
V5	PCMS Standard Voucher Document	Spending
V6	PCMS Standard Voucher Document	Spending

ID	Document	Function
V8	PCMS Payment Voucher Document	Spending
WR	ABCO Write-Off Cash Receipt Document	Accounts Receivable
XA	TRVL Travel Advance Document	Spending
XO	TRVL Obligation Document	Spending
XP	TRVL Third Party Payment Voucher Document	Spending
XT	TRVL Travel Voucher Document (Expenses)	Spending
XV	TRVL Travel Voucher Document (Relocations)	Spending

Functional Interfaced Document List

Function	ID	Document
Accounts Receivable	A1	ABCO Billing Document
Accounts Receivable	A2	ABCO Regular Collection Cash Receipt Document
Accounts Receivable	A3	ABCO Voluntary Collection Cash Receipt Document
Accounts Receivable	WR	ABCO Write-Off Cash Receipt Document
Spending	FO	FEDS Miscellaneous Order Document
Spending	FV	FEDS Payment Voucher Document
Spending	OD	FEDSTRIP Document
Spending	SF	FEDS Standard Voucher Document
Spending	DF	FTSP Direct Disbursement Document
Spending	VF	FTSP Accrual/Suspense Document
Spending	G1	GVTS Payment Voucher Document
Spending	G2	GVTS Transportation Invoice Document
Spending	G3	GVTS Standard Voucher Document
Spending	DM	MPOL No-Check Disbursement Document
Spending	VM	MPOL Suspense Document
Spending	V2	PCMS Payment Voucher Document
Spending	V5	PCMS Standard Voucher Document
Spending	V6	PCMS Standard Voucher Document
Spending	V8	PCMS Payment Voucher Document
Spending	EA	PRCH Type 40 Receiver Document
Spending	GA	PRCH Miscellaneous Order Document
Spending	GC	PRCH Miscellaneous Order Document
Spending	GD	PRCH Miscellaneous Order Document
Spending	KA	PRCH OPAC Payable Document
Spending	KD	PRCH OPAC Payable Document
Spending	VA	PRCH Payment Voucher Document
Spending	VC	PRCH Payment Voucher Document
Spending	VD	PRCH Payment Voucher Document
Spending	VE	PRCH Payment Voucher Document
Spending	SP	PRCH Standard Voucher Document
Spending	SE	TELE Standard Voucher Document
Spending	VT	TELE Payment Voucher Document
Spending	T1	TRAN Transportation Invoice Document
Spending	T2	TRAN Transportation Invoice Document
Spending	XA	TRVL Travel Advance Document

Function	ID	Document
Spending	XO	TRVL Obligation Document
Spending	XP	TRVL Third Party Payment Voucher Document
Spending	XT	TRVL Travel Voucher Document (Expenses)
Spending	XV	TRVL Travel Voucher Document (Relocations)
Spending	SU	UTVN Document
Spending	UV	UTVN Document

Tables List

Note: There are three levels of control for setting and maintaining the values in tables. (See **FFIS Tables** in **Part 1, Introduction**.) In this list, the Level column contains the control level indicator for each table, defined as follows:

Level	Definition
CMN	Common table (Dept control)
AGS	Agency-specific table (Agcy control)
CBD	Combination table (Dept&Agcy control)

ID	Name	Function	Level
ACCT	Account Type Reference Table	General Ledger	CMN
ACED	Accounting Entries Definition Reference Table	General Ledger	CMN
ACEN	Accounting Entries Reference Table	General Ledger	CMN
ACEV	Accounting Event Type Reference Table	General Ledger	CMN
ACTI	Accountable Document Inquiry Table	General Reference	AGS
ACXT	Accounting Structure Code Cross-Reference Table	General Reference	AGS
ADNT	Automatic Document Numbering Table	General Reference	AGS
AGCY	Agency Reference Table	General Reference	CMN
ALLT	Allotment Inquiry Table	Budget And Funds Control	AGS
ALOC	Allocation Inquiry Table	Budget And Funds Control	AGS
ALST	Allotment Status Inquiry Table	Budget And Funds Control	AGS
APCT	Accounting Period Cutoff Reference Table	General Reference	CMN
APLT	Appropriation/Public Law Inquiry Table	Budget And Funds Control	AGS
APOR	Apportionment Inquiry Table	Budget And Funds Control	AGS
APPL	Debt Appeal Reference Table	Accounts Receivable	AGS
APPR	Appropriation Inquiry Table	Budget And Funds Control	AGS
APRD	Accounting Period Reference Table	General Reference	AGS
ARCL	Accounts Receivable Case History Line Inquiry Table	Accounts Receivable	AGS
ARDT	Accounts Referral Destination Reference Table	Accounts Receivable	AGS
AREF	Accounts Receivable Referral Inquiry Table	Accounts Receivable	AGS
AREP	Accounts Receivable Referral Parameter Table	Accounts Receivable	CMN
ARHT	Receivable Header Inquiry Table	Accounts Receivable	AGS
ARLT	Receivable Line Inquiry Table	Accounts Receivable	AGS
AROP	Accounts Receivable Control Options Reference Table	Accounts Receivable	AGS
ARXT	Accounting Structure Code Reverse Cross-Reference Table	General Reference	AGS
AVOT	Accounting Structure Code Options Reference Table	General Reference	AGS
BOCT	Budget Object Code Reference Table	General Reference	AGS
CBLK	Check Block Inquiry Table	Disbursements	AGS
CHKH	Check Header Inquiry Table	Disbursements	AGS
CHKL	Check Detail Inquiry Table	Disbursements	AGS
CLDT	Calendar Date Reference Table	General Reference	CMN

ID	Name	Function	Level
CLTX	Text Clause Reference Table	General Reference	AGS
COMR	FFIS Communication Response Table	General Reference	CBD
COMT	FFIS Communication Table	General Reference	CBD
CRHT	Cash Receipt Header Inquiry Table	Accounts Receivable	AGS
CRLT	Cash Receipts Line Inquiry Table	Accounts Receivable	AGS
CSUM	Check Summary Inquiry Table	Disbursements	AGS
CXLT	Check EFT/Cancellation Inquiry Table	Disbursements	AGS
DATE	Dates Table	General Reference	AGS
DCTE	Document Tracking Date Entry Table	General Reference	AGS
DCTI	Document Tracking Inquiry Table	General Reference	AGS
DISB	Treasury Disbursing Office Reference Table	Disbursements	CMN
DLRC	Discount Lost Reason Code Reference Table	General Reference	CMN
DOPT	Disbursing Options Reference Table	Disbursements	AGS
DPTX	Default Payment Text Reference Table	Spending	CMN
DVAL	Default Values Reference Table	General Reference	AGS
DVOT	Default Values Options Reference Table	General Reference	AGS
DVSN	Division Reference Table	General Reference	AGS
DXRF	Document Cross Reference Inquiry Table	General Reference	AGS
EFTH	EFT Header Inquiry Table	Disbursements	AGS
EFTL	EFT Detail Inquiry Table	Disbursements	AGS
ERPL	Replace EFT Inquiry Table	Disbursements	AGS
ERRG	Error Guide Inquiry Table	General Reference	CMN
FALC	Fiscal Year Allocation Inquiry Table	Budget And Funds Control	AGS
FALT	Fiscal Year Allotment Inquiry Table	Budget And Funds Control	AGS
FAPP	Fiscal Year Appropriation Inquiry Table	Budget And Funds Control	AGS
FAPR	Fiscal Year Apportionment Inquiry Table	Budget And Funds Control	AGS
FCAT	Fund Category Reference Table	General Reference	CMN
FCLS	Fund Class Reference Table	General Reference	AGS
FGRP	Fund Group Reference Table	General Reference	AGS
FSAP	Fund Summary Group Appropriation Table	Budget And Funds control	AGS
FSAV	Fund Summary Group Available Balance Table	Budget And Funds Control	AGS
FSGL	Fund Summary Group General Ledger Balance Inquiry Table	Budget And Funds Control	AGS
FSUM	Fund Summary Group Definition Table	Budget And Funds Control	AGS
FSYM	Fund Treasury Symbol Reference Table	General Reference	AGS
FSYR	Fiscal Year Reference Table	General Reference	CMN
FTVT	File Transmission Verification Table	General Reference	AGS
FTYP	Fund Type Reference Table	General Reference	CMN
FUND	Fund Reference Table	General Reference	AGS
FUN2	Fund Options Reference Table	General Reference	AGS

ID	Name	Function	Level
GCLS	General Ledger Class Reference Table	General Ledger	CMN
GGRP	General Ledger Group Reference Table	General Ledger	CMN
GIDT	Generic Interface Document Cross-Reference Table	General Reference	AGS
GLAC	General Ledger Account Reference Table	General Ledger	CMN
GLBL	General Ledger Balance Inquiry Table	General Ledger	AGS
GLDB	General Ledger Detail Balance Inquiry Table	General Ledger	AGS
GLTT	Effective Transaction Type Definition Reference Table	General Reference	CMN
GLXT	General Ledger Interactive Description System Code Crosswalk Table	General Reference	CMN
GRPT	General Reporting Category Reference Table	General Reference	AGS
GSCH	Generic Schedule Control Header Inquiry Table	General Reference	AGS
GSCL	Generic Schedule Control Line Inquiry Table	General Reference	AGS
GTSM	Guest Treasury Symbol Reference Table	General Reference	CMN
IRCT	Interest Reason Code Reference Table	General Reference	CMN
IVCH	Invoice-Payment Voucher-Check/EFT Cross-Ref Inquiry Table	Disbursements	AGS
IVLT	Internal Voucher Inquiry Table	Spending	AGS
JVLT	Journal Voucher And Standard Journal Inquiry Table	General Ledger	AGS
LIMT	Limits Reference Table	Budget And Funds Control	AGS
LMDT	Limit Dimensions Reference Table	Budget And Funds Control	AGS
MSGL	Monthly Summary General Ledger Balance Inquiry Table	General Ledger	AGS
OBDT	Outstanding Billing Documents Reference Table	Accounts Receivable	AGS
OBLH	Orders Header Inquiry Table	Spending	AGS
OBLL	Purchase Order Accounting Line Inquiry Table	Spending	AGS
OBRV	Object Revenue Class Inquiry Table	Cost Allocation	AGS
OCAT	Federal Object Class (Object Category) Reference Table	General Reference	CMN
OCLS	Object Class Reference Table	General Reference	CMN
ODRQ	On Demand Requisition Print Data Entry Table	Spending	AGS
OGRP	Object Group Reference Table	General Reference	AGS
OIDT	OTRS-FFIS Interface Document Inquiry Table	General Reference	CMN
ORGN	Organization Reference Table	General Reference	AGS
OTYP	Object Type Reference Table	General Reference	AGS
PAPP	Pending Appropriation Inquiry Table	Budget And Funds Control	AGS
PGMT	Program Reference Table	General Reference	AGS
PPAY	Prompt Pay Reference Table	General Reference	CMN
PPDT	Prompt Pay Detail Table	Disbursements	AGS
PPST	Prompt Pay Summary Table	Disbursements	AGS
PPS2	Prompt Pay Summary Table – Screen 2	Disbursements	AGS
PPS3	Prompt Pay Summary Table – Screen 3	Disbursements	AGS
PRXT	PRCH To FFIS Vendor Cross Reference Table	General Reference	AGS

ID	Name	Function	Level
PVCH	Voucher Holdback Inquiry Table	Spending	AGS
PVHT	Voucher Header Inquiry Table	Spending	AGS
PVLT	Voucher Line Inquiry Table	Spending	AGS
RCAT	Revenue Category Reference Table	General Reference	CMN
RCHT	Receiver Header Inquiry Table	Spending	AGS
RCLA	Receiver Accounting Line Inquiry Table	Spending	AGS
RCLS	Revenue Class Reference Table	General Reference	AGS
REJV	Recurring Journal Voucher And Standard Voucher Data Entry Table	Accounts Receivable	AGS
REPL	Checks Awaiting Replacement Inquiry Table	Disbursements	AGS
REPV	Recurring Payment Voucher Data Entry Table	Spending	AGS
REQH	Requisition Header Inquiry Table	Spending	AGS
REQL	Requisition Accounting Line Inquiry Table	Spending	AGS
RLIT	Report Literal Reference Table	General Reference	CMN
RPGH	Reprogramming Header Inquiry Table	Budget And Funds Control	AGS
RPGL	Reprogramming Line Inquiry Table	Budget And Funds Control	AGS
RPTG	Reporting Category Reference Table	General Reference	CMN
RQST	Requisition Status Inquiry Table	Spending	AGS
RSRC	Revenue Source Reference Table	General Reference	AGS
RVJV	Self-Reversing Journal Voucher Inquiry Table	General Ledger	AGS
RXTX	Requisition Text Data Entry Table	Spending	AGS
SAFR	Suballotment Forward Reference Inquiry Table	Budget And Funds Control	AGS
SAIN	Suballotment Inquiry Table	Budget And Funds Control	AGS
SAOP	Suballotment Options Inquiry Table	Budget And Funds Control	AGS
SASP	Suballotment Spending Control Inquiry Table	Budget And Funds Control	AGS
SAST	Suballotment Structure Inquiry Table	Budget And Funds Control	AGS
SCHD	Schedule Number Data Entry Table	Disbursements	CBD
SGLT	Standard General Ledger Account Reference Table	General Ledger	AGS
SJDF	Subsidiary Journal Definition Reference Table	General Reference	CMN
SOPT	System Control Options Reference Table	General Reference	AGS
SPDT	Spending Control Document Summary Screen Table	Budget And Funds Control	AGS
SRCE	Source Data Reference Table	Accounts Receivable	AGS
STCT	State Code Reference Table	General Reference	CMN
SUSF	Document Suspense Index 1	System Operations	AGS
SUS2	Document Suspense Index 2	System Operations	AGS
TADV	Travel Advance Inquiry Table	Spending	AGS
TAHT	Travel Advance Header Inquiry Table	Spending	AGS
TALT	Travel Advance Line Inquiry Table	Spending	AGS
TAXT	Tax Code Reference Table	Spending	AGS
TCAT	Transaction Category Reference Table	General Reference	AGS

ID	Name	Function	Level
TDES	Travel Description Reference Table	Spending	AGS
TDFT	Travel Default Values Table	Spending	AGS
TETM	Travel Expense Type Match Reference Table	Spending	AGS
TIDT	Travel Interface Document Inquiry Table	General Reference	CMN
TINT	TIN Number Cross Reference Inquiry Table	Spending	AGS
TMOD	Travel Mode Reference Table	Spending	AGS
TNHT	Transportation Invoice Header Inquiry Table	Spending	AGS
TNLT	Transportation Invoice Line Inquiry Table	Spending	AGS
TOFM	To/From Code Reference Table	General Reference	AGS
TOHT	Travel Order Header Inquiry Table	Spending	AGS
TOLT	Travel Order Line Inquiry Table	Spending	AGS
TOPT	Treasury Offset Entry Table	Spending	AGS
TOTL	Allocation Totals Inquiry Table	Cost Allocation	AGS
TPAT	PRCH Third Party Assignment Table	Spending	AGS
TPLT	Travel-Related Voucher Line Inquiry Table	Spending	AGS
TPRP	Travel Purpose Reference Table	Spending	AGS
TROH	Training Order Header Inquiry Table	Spending	AGS
TSCH	Treasury Schedule Control Header Table	Disbursements	CBD
TSCL	Treasury Schedule Control Line Inquiry Table	Disbursements	CBD
TSCR	Treasury Schedule Control Rejection Reference Table	Disbursements	CBD
TSPC	Travel Special Options Reference Table	Spending	AGS
TSYF	Treasury Fund Reference Table	General Reference	AGS
TSYM	Treasury Symbol Reference Table	General Reference	AGS
TTYP	Travel Type Reference Table	Spending	AGS
TVAT	Travel Voucher Accounting Line Inquiry Table	Spending	AGS
TVHT	Travel Voucher Header Inquiry Table	Spending	AGS
TXTP	Text Type Reference Table	General Reference	AGS
TYOP	Type Of Overpayment Reference Table	Accounts Receivable	CMN
VCHK	Payment Voucher Line-Check Number Cross-Reference Inquiry Table	Disbursements	AGS
VCTE	Voucher Tracking Data Entry Table	General Reference	AGS
VCTI	Voucher Tracking Inquiry Table	General Reference	AGS
VCXT	Feeder To FFIS Vendor Cross Reference Table	General Reference	CMN
VEND	Vendor Reference Table	General Reference	CMN
VNAM	Vendor Name Inquiry Table	General Reference	AGS
VOID	Voided Checks Reference Table	Disbursements	CMN
VPYA	Vender Prior Calendar Year Disbursement Amount Inquiry Table	Disbursements	AGS
VRPT	Vendor Reporting Reference Table	General Reference	CMN
VTXT	Voucher Text Data Entry Table	Spending	AGS

ID	Name	Function	Level
VTYP	Vendor Type Reference Table	General Reference	CMN
VXDD	Payment Voucher Line - Disb Document Cross Reference Inquiry Table	Disbursements	AGS
VXRF	Vendor Document Cross-Reference Inquiry Table	General Reference	AGS
WORC	Write-Off Reason Code Reference Table	Accounts Receivable	CMN
WROT	Write-Off Reference Table	Accounts Receivable	AGS
WTAT	Withholding Tax Allowance Reference Table	Spending	AGS
YACT	Year End Account Reference Table	General Reference	CMN
YOPT	Year End Control Options Reference Table	General Reference	CMN

Key Fields On The GIDT For Various Interfaces

Feeder System	Trans Code	Key 1	Key 2	Key 3	Key 4
PRCH (Obligation)	GA, GC GD EA	Invoice Number	Purchase Order Number	Line Item	Accounting Line
PRCH (Payments)	VA VC VD VE KA KD	Invoice No.	Purchase Order Number	Line Item	Accounting Line
PRCH (Last Payments)	VA VC VD VE KA KD	Order Number	Last Payment Number	Blank	Blank
TELE (Payments)	VT	BFY	Account Number	Service Date	4 digit Sequential Number from XADNT
GVTS (Invoice)	G2	Invoice Number or Invoice Supplement Number/Account Number	Norm-Reversal Code/Sec 1 Code/Ticket Number/Ticket Sequential Number	Accounting Class	Object Class
FEDS (Obligation)	FO	Requisitioner Req. Date GSA Region Code	Req. Serial Number	Accounting Class	Object Class
FEDS (Direct Disbursement)	OD Type 1	G or V (depending upon GSA Region Code and Type) Requisitioner Req. Date	Req. Serial Number	Accounting Class	Object Class
FEDS (Direct Disbursement)	OD Type 2	C based upon GSA Region Code and Type Requisitioner Req. Date	Bill No. Store Purchase Date Cash Rcpt. Number	Accounting Class	Object Class

Feeder System	Trans Code	Key 1	Key 2	Key 3	Key 4
FEDS (Payments)	FV	D (based upon GSA Region) Requisitioner Re. Date	Bill Number Sch. Conf. Date	Accounting Class	Object Class
TRAN (Invoice and Payments)	T1	Carrier Payee ID/ Carrier Invoice No./GTR Number	Accounting Class	Budget Object Class	Traveler's Name/FFIS document and line number
TRAN (Invoice and Payments)	T2	Carrier Payee ID/ Carrier Invoice No./GBL Number	Accounting Class	Budget Object Class	Traveler's Name/FFIS document and line number
FTSP (Direct Disbursement)	DF	FY document is processed	Customer Number	OPAC Bill No.	Date
MPOL (Direct Disbursement)	DM	FY	BOAC Number	OPAC Bill No.	Date of service
ABCO (Billing Document)	A1	Debtor Number/ Bill Number	Blank	Accounting Class	Object Class
ABCO (Cash Receipt)	A2 A3 WR	Debtor Number/ Bill Number	Deposit Number/ Check ID	Accounting Class	Object Class

Rural Development FFIS Processing Matrix For Budget

(TC – Transaction Code; all are entered directly into FFIS)

NOTE: *All pertinent General Ledger Tables are updated by the TC's but are not listed in this matrix.*

Procedure Reference(s):	**FED: OMB Circular A–34** **RD: 2009–A, 2009–B, 2009–C, 2009–D** **NFC: Title VI, Ch. 8, Sec. 5**				
Transaction	**Appropriation**	**Apportionment**	**Allocation**	**Allotment**	**Suballotment**
Forms	SF–132 SF–1151	SF–132	Unnumbered Form/Spreadsheet	Unnumbered Form/Spreadsheet	
TC	AA	AA PA	BE	BL	SA
Update Table	AA: APPR, APOR, FAPP, FAPR, GL Tables	AA: APPR, APOR, FAPP, FAPR, GL Tables PA: APPR, APOR, FAPP, FAPR, GL Tables	APPR, APOR, ALOC, FALC, FALT, FAPP, FAPR, GL Tables	APPR, APOR, ALOC, ALLT, FALC, FALT, FAPP, FAPR, GL Tables	SASP, SAST, SAFR, ALLT, ALST, SAIN*(*updated by nightly cycle), GL Tables
Responsible Party	RD Budget Staff Budgeted to Fund	RD Budget Staff Budgeted to Fund	RD Budget Staff Budgeted to Fund and Division (i.e., Headquarters and State Offices)	Headquarters Budgeted to Fund, Division, and Org 1 State Offices Budgeted to Fund, Division, Org 1, and Budget Object Code (BOC)	Headquarters Budgeted to Fund, Division, Org 2, 3, or 4, and BOC State Offices Budgeted to Fund, Division, Org 2, and BOC

Rural Development FFIS Processing Matrix For Spending

(TC/TT – Transaction Code/Transaction Type; D–Direct Entry Into FFIS; F–Transaction Generated from Feeder System into FFIS; G–Generated from FFIS)*

**Transaction Types are not listed for feeder system Transaction Codes (TCs) because of the variance for different fund types (e.g., reimbursable vs. nonreimbursable)*

***Note:** All pertinent Budget Execution Tables and General Ledger Tables are updated by the TCs but are not listed in this matrix.*

System:	Purchase Order System (PRCH)			
Expenditure/Receivable Type:	Type 40 (Fixed cost procurement with one-time vendor payment.)			
Procedure Reference(s):	**FED**	**DR**	**RD**	**NFC**
	48 CFR	5000	2024–A 2057–A	Title II, Ch. 5, Sec. 1 Title VI, Ch. 7, Sec. 1 Title VI, Ch. 7, Sec. 3

Transaction	Commitment	Obligation	Receiver	Payment	Adjustments	Billing	Cash Receipt	Write Off
Forms	AD–700	AD–838	AD-838 Receipt Copy and AD-838A if needed (for orders over $1,000 or less than $1,000 marked to require a receiving report)	Invoice from Commercial Vendor				
TC/TT (D, F, or G)	RQ/01 (D)	GA (F) Requires manual entry of document reference number	EA (F) Document reference not required – Generated from feeder system	VA (F) KA (F–OPAC) Document reference not required – Generated from feeder system	SP (F)			
Update Table	REQH, REQL	OBLH, OBLL, REQH, REQL, GIDT	OBLH, OBLL, RCHT, RCLA, GIDT	OBLH, OBLL, PVHT, PVLT, GIDT	JVLT			

Rural Development FFIS Processing Matrix For Spending

(TC/TT – Transaction Code/Transaction Type; D–Direct Entry Into FFIS; F–Transaction Generated from Feeder System into FFIS; G–Generated from FFIS)*

**Transaction Types are not listed for feeder system Transaction Codes (TCs) because of the variance for different fund types (e.g., reimbursable vs. nonreimbursable)*

***Note:** All pertinent Budget Execution Tables and General Ledger Tables are updated by the TCs but are not listed in this matrix.*

System:	Purchase Order System (PRCH)							
Expenditure/Receivable Type:	Type 41 and Type 41P (Orders Paid in Advance) (Purchase of subscriptions and training costs)							
Procedure Reference(s):	**FED**	**DR**	**RD**	**NFC**				
	48 CFR	4100 5000	2024–A 2057–A	Title II, Ch. 5, Sec. 1 Title VI, Ch. 7, Sec. 1 and Sec. 3				
Transaction	**Commitment**	**Obligation**	**Receiver**	**Payment**	**Adjustments**	**Billing**	**Cash Receipt**	**Write Off**
Forms	AD–700	AD–838		AD-838 (for 41P) Invoice from Commercial Vendor (for orders not paid in advance)				
TC/TT (D, F, or G)	RQ/01 (D)	GB (F) (for orders not paid in advance) Requires manual entry of document reference number		VB (F) KB (F–OPAC) Document reference not required – Generated from feeder system	SP(F)			
Update Table	REQH, REQL	OBLH, OBLL, REQH, REQL, GIDT		OBLH, OBLL, PVHT, PVLT, GIDT	JVLT			

Rural Development FFIS Processing Matrix For Spending

(TC/TT – Transaction Code/Transaction Type; D–Direct Entry Into FFIS; F–Transaction Generated from Feeder System into FFIS; G–Generated from FFIS)*

**Transaction Types are not listed for feeder system Transaction Codes (TCs) because of the variance for different fund types (e.g., reimbursable vs. nonreimbursable)*

***Note:** All pertinent Budget Execution Tables and General Ledger Tables are updated by the TCs but are not listed in this matrix.*

System:	Purchase Order System (PRCH)							
Expenditure/Receivable Type:	Type 43 (Fixed or estimated procurement with one-time or recurring vendor payment)							
Procedure Reference(s):	**FED**	**DR**	**RD**	**NFC**				
	48 CFR	5000	2024–A	Title II, Ch. 5, Sec. 1 Title VI, Ch. 7, Sec. 1 and Sec. 3				
Transaction	**Commitment**	**Obligation**	**Receiver**	**Payment**	**Adjustments**	**Billing**	**Cash Receipt**	**Write Off**
Forms	AD–700	AD–838		Invoice from Commercial Vendor AD-838B				
TC/TT (D, F, or G)	RQ/01 (D)	GD (F) Requires manual entry of document reference number		VD (F) KD (F–OPAC) Document reference not required – Generated from feeder system	SP(F)			
Update Table	REQH, REQL	OBLH, OBLL, REQH, REQL, GIDT		OBLH, OBLL, PVHT, PVLT, GIDT	JVLT			

Rural Development FFIS Processing Matrix For Spending

(TC/TT – Transaction Code/Transaction Type; D–Direct Entry Into FFIS; F–Transaction Generated from Feeder System into FFIS; G–Generated from FFIS)*

**Transaction Types are not listed for feeder system Transaction Codes (TCs) because of the variance for different fund types (e.g., reimbursable vs. nonreimbursable)*

***Note:** All pertinent Budget Execution Tables and General Ledger Tables are updated by the TCs but are not listed in this matrix.*

System:	Purchase Order System (PRCH)							
Expenditure/Receivable Type:	Type 45 (Blanket Purchase Agreement)							
Procedure Reference(s):	**FED**	**DR**	**RD**	**NFC**				
	48 CFR	5000	2024–A	Title II, Ch. 5, Sec. 1 Title VI, Ch. 7, Sec. 1 and Sec. 3				
Transaction	**Commitment**	**Obligation**	**Receiver**	**Payment**	**Adjustments**	**Billing**	**Cash Receipt**	**Write Off**
Forms	AD–700			Invoice from Commercial Vendor AD–838D				
TC/TT (D, F, or G)	RQ/01 (D)			VE (F) Requires manual entry of document reference number	SP(F)			
Update Table	REQH, REQL			REQH, REQL, PVHT, PVLT, GIDT	JVLT			

Rural Development FFIS Processing Matrix For Spending

(TC/TT – Transaction Code/Transaction Type; D–Direct Entry Into FFIS; F–Transaction Generated from Feeder System into FFIS; G–Generated from FFIS)*

**Transaction Types are not listed for feeder system Transaction Codes (TCs) because of the variance for different fund types (e.g., reimbursable vs. nonreimbursable)*

***Note:** All pertinent Budget Execution Tables and General Ledger Tables are updated by the TCs but are not listed in this matrix.*

***Note:** If the contract effective date is prior to the current date and there are late payments subject to penalty interest, a PV must be processed with a separate line for each late payment and program (accounting) code combination.*

System:	Purchase Order System (PRCH)							
Expenditure/Receivable Type:	Fixed cost procurement with automatic cyclic payments (Replaces PRCH Type 42) (page 1 of 3)							
Procedure Reference(s):	**FED**	**DR**	**RD**	**NFC**				
	41 CFR 48 CFR	1600 5000 5100	2021–A 2024–A					
Transaction	**Commitment**	**Obligation**	**Receiver**	**Payment**	**Adjustments**	**Billing**	**Cash Receipt**	**Write Off**
Forms	AD–700	Signed contract with vendor and reimbursable agreement if applicable						

Rural Development FFIS Processing Matrix For Spending

(TC/TT – Transaction Code/Transaction Type; D–Direct Entry Into FFIS; F–Transaction Generated from Feeder System into FFIS; G–Generated from FFIS)*

**Transaction Types are not listed for feeder system Transaction Codes (TCs) because of the variance for different fund types (e.g., reimbursable vs. nonreimbursable)*

Note: *All pertinent Budget Execution Tables and General Ledger Tables are updated by the TC's but are not listed in this matrix.*

Note: *If the contract effective date is prior to the current date and there are late payments subject to penalty interest, a PV must be processed with a separate line for each late payment and program (accounting) code combination.*

System:	Purchase Order System (PRCH)							
Expenditure/Receivable Type:	Fixed cost procurement with automatic cyclic payments (Replaces PRCH Type 42) (page 2 of 3)							
Procedure Reference(s):	**FED**	**DR**	**RD**	**NFC**				
	41 CFR 48 CFR	1600 5000 5100	2021–A 2024–A					
Transaction	**Commitment**	**Obligation**	**Receiver**	**Payment**	**Adjustments**	**Billing**	**Cash Receipt**	**Write Off**
TC/TT (D, F, or G)	RQ/01 (D)	MO/01 (D) Requires manual entry of document reference number		Establish REPV Record. (Entry in REPV Table will automatically reduce commitment and obligations based on recurring payment cycle.) Requires manual entry of document reference number.				

Rural Development FFIS Processing Matrix For Spending

(TC/TT – Transaction Code/Transaction Type; D–Direct Entry Into FFIS; F–Transaction Generated from Feeder System into FFIS; G–Generated from FFIS)*

**Transaction Types are not listed for feeder system Transaction Codes (TCs) because of the variance for different fund types (e.g., reimbursable vs. nonreimbursable)*

***Note:** All pertinent Budget Execution Tables and General Ledger Tables are updated by the TC's but are not listed in this matrix.*

***Note:** If the contract effective date is prior to the current date and there are late payments subject to penalty interest, a PV must be processed with a separate line for each late payment and program (accounting) code combination.*

System:	Purchase Order System (PRCH)							
Expenditure/Receivable Type:	Fixed cost procurement with automatic cyclic payments (Replaces PRCH Type 42) (page 3 of 3)							
Procedure Reference(s):	**FED**	**DR**	**RD**	**NFC**				
	41 CFR 48 CFR	1600 5000 5100	2021–A 2024–A					
Transaction	**Commitment**	**Obligation**	**Receiver**	**Payment**	**Adjustments**	**Billing**	**Cash Receipt**	**Write Off**
Update Table	REQH, REQL	OBLH, OBLL, REQH, REQL, GIDT		OBLH, OBLL, PVLT, GIDT				

Rural Development FFIS Processing Matrix For Spending

(TC/TT – Transaction Code/Transaction Type; D–Direct Entry Into FFIS; F–Transaction Generated from Feeder System into FFIS; G–Generated from FFIS)*

**Transaction Types are not listed for feeder system Transaction Codes (TCs) because of the variance for different fund types (e.g., reimbursable vs. nonreimbursable)*

***Note:** All pertinent Budget Execution Tables and General Ledger Tables are updated by the TCs but are not listed in this matrix.*

System:	Purchase Card Management System (PCMS)							
Expenditure/Receivable Type:	Individual Purchase (page 1 of 2)							
Procedure Reference(s):	**FED**	**DR**	**RD**	**NFC**				
	48 CFR	5000	2024–A 2027–B 2057–A	Title VI, Ch. 7, Sec. 14				
Transaction	**Commitment**	**Obligation**	**Receiver**	**Payment**	**Adjustments**	**Billing**	**Cash Receipt**	**Write Off**
Forms	AD–287 AD-287-2 AD–343 AD–700 SF–182 SF–1164			Electronic Invoice				
TC/TT (D, F, or G)	RQ/01 (D–Establish) RQ/01 (D–Cancel subsequent to PCMS/FFIS reconciliation)			V2 (F) Document reference not required	V8 (F) Cardholder Details V5 (F) Cardholder Modification V6/__ (D)* FFIS Transaction Amount Correction *Only Functional Administrator can input Document reference not required			

Rural Development FFIS Processing Matrix For Spending

(TC/TT – Transaction Code/Transaction Type; D–Direct Entry Into FFIS; F–Transaction Generated from Feeder System into FFIS; G–Generated from FFIS)*

**Transaction Types are not listed for feeder system Transaction Codes (TCs) because of the variance for different fund types (e.g., reimbursable vs. nonreimbursable)*

***Note:** All pertinent Budget Execution Tables and General Ledger Tables are updated by the TCs but are not listed in this matrix.*

System:	Purchase Card Management System (PCMS)							
Expenditure/Receivable Type:	Individual Purchase (page 2 of 2)							
Procedure Reference(s):	**FED**	**DR**	**RD**	**NFC**				
	48 CFR	5000	2024–A 2027–B 2057–A	Title VI, Ch. 7, Sec. 14				
Transaction	**Commitment**	**Obligation**	**Receiver**	**Payment**	**Adjustments**	**Billing**	**Cash Receipt**	**Write Off**
Update Table	REQH, REQL			PVHT, PVLT, GSCH	GSCL, JVLT			

Rural Development FFIS Processing Matrix For Spending

(TC/TT – Transaction Code/Transaction Type; D–Direct Entry Into FFIS; F–Transaction Generated from Feeder System into FFIS; G–Generated from FFIS)*

**Transaction Types are not listed for feeder system Transaction Codes (TCs) because of the variance for different fund types (e.g., reimbursable vs. nonreimbursable)*

***Note:** All pertinent Budget Execution Tables and General Ledger Tables are updated by the TCs but are not listed in this matrix.*

System:	Purchase Card Management System (PCMS)							
Expenditure/Receivable Type:	Cardholder (page 1 of 3)							
Procedure Reference(s):	**FED**	**DR**	**RD**	**NFC**				
	48 CFR	5000	2024–A 2057–A	Title VI, Ch. 7, Sec. 14				
Transaction	**Commitment**	**Obligation**	**Receiver**	**Payment**	**Adjustments**	**Billing**	**Cash Receipt**	**Write Off**
Forms	AD–287 AD–287–2 AD–343 AD–700 SF–182 SF–1164			Electronic Invoice				

Rural Development FFIS Processing Matrix For Spending

(TC/TT – Transaction Code/Transaction Type; D–Direct Entry Into FFIS; F–Transaction Generated from Feeder System into FFIS; G–Generated from FFIS)*

**Transaction Types are not listed for feeder system Transaction Codes (TCs) because of the variance for different fund types (e.g., reimbursable vs. nonreimbursable)*

***Note:** All pertinent Budget Execution Tables and General Ledger Tables are updated by the TCs but are not listed in this matrix.*

System:	Purchase Card Management System (PCMS)							
Expenditure/Receivable Type:	Cardholder (page 2 of 3)							
Procedure Reference(s):	**FED**	**DR**	**RD**	**NFC**				
	48 CFR	5000	2024–A 2057–A	Title VI, Ch. 7, Sec. 14				
Transaction	**Commitment**	**Obligation**	**Receiver**	**Payment**	**Adjustments**	**Billing**	**Cash Receipt**	**Write Off**
TC/TT (D, F, or G)	RQ/01 (D–Establish) RQ/01 (D–Decrease) subsequent to PCMS/FFIS reconciliation)			V2 (F) Document reference not required	V8 (F) Cardholder Details V5 (F) Cardholder Modification V6/__ (D)* FFIS Transaction Amount Correction *Only Functional Administrator can input. Document reference not required			

Rural Development FFIS Processing Matrix For Spending

(TC/TT – Transaction Code/Transaction Type; D–Direct Entry Into FFIS; F–Transaction Generated from Feeder System into FFIS; G–Generated from FFIS)*

**Transaction Types are not listed for feeder system Transaction Codes (TCs) because of the variance for different fund types (e.g., reimbursable vs. nonreimbursable)*

***Note:** All pertinent Budget Execution Tables and General Ledger Tables are updated by the TC's but are not listed in this matrix.*

System:	Purchase Card Management System (PCMS)							
Expenditure/Receivable Type:	Cardholder (page 3 of 3)							
Procedure Reference(s):	**FED**	**DR**	**RD**	**NFC**				
	48 CFR	5000	2024–A 2057–A	Title VI, Ch. 7, Sec. 14				
Transaction	**Commitment**	**Obligation**	**Receiver**	**Payment**	**Adjustments**	**Billing**	**Cash Receipt**	**Write Off**
Update Table	REQH, REQL			PVHT, PVLT, GSCH	GSCL, JVLT			

Rural Development FFIS Processing Matrix For Spending

(TC/TT – Transaction Code/Transaction Type; D–Direct Entry Into FFIS; F–Transaction Generated from Feeder System into FFIS; G–Generated from FFIS)*

**Transaction Types are not listed for feeder system Transaction Codes (TCs) because of the variance for different fund types (e.g., reimbursable vs. nonreimbursable)*

***Note:** All pertinent Budget Execution Tables and General Ledger Tables are updated by the TCs but are not listed in this matrix.*

System:	FFIS Direct							
Expenditure/Receivable Type:	Training							
Procedure Reference(s):	**FED**	**DR**	**RD**	**NFC**				
		4100	2057–A					
Transaction	**Commitment**	**Obligation**	**Receiver**	**Payment**	**Adjustments**	**Billing**	**Cash Receipt**	**Write Off**
Forms	AD–700	SF–182		Invoice SF–182				
TC/TT (D, F, or G)	RQ/01 (D) Requires manual entry of document reference number	TG/01 (D) Requires manual entry of document reference number		PV/01 (D) Requires manual entry of document reference number				
Update Table	REQH, REQL	OBLH, OBLL, REQH, REQL, TROH, GIDT		OBLH, OBLL, PVLT, PVHT				

Rural Development FFIS Processing Matrix For Spending

(TC/TT – Transaction Code/Transaction Type; D–Direct Entry Into FFIS; F–Transaction Generated from Feeder System into FFIS; G–Generated from FFIS)*

**Transaction Types are not listed for feeder system Transaction Codes (TCs) because of the variance for different fund types (e.g., reimbursable vs. nonreimbursable)*

***Note:** All pertinent Budget Execution Tables and General Ledger Tables are updated by the TCs but are not listed in this matrix.*

System:	Travel (TRVL)							
Expenditure/Receivable Type:	Advance (Traveler does not have a Government credit card)							
Procedure Reference(s):	**FED**	**DR**	**RD**	**NFC**				
	FTRs	ATRs 2300	2036–A 2039–A	Title II, Ch. 2, Sec. 1 Title VI, Ch. 6, Sec. 1, 2, and 3				
Transaction	**Commitment**	**Obligation**	**Receiver**	**Payment**	**Adjustments**	**Billing**	**Cash Receipt**	**Write Off**
Forms				AD–202 AD–202M AD–202R AD–202RE				
TC/TT (D, F, or G)				XA (F) Document reference not required				
Update Table				TADV, TAHT, TIDT				

Rural Development FFIS Processing Matrix For Spending

(TC/TT – Transaction Code/Transaction Type; D–Direct Entry Into FFIS; F–Transaction Generated from Feeder System into FFIS; G–Generated from FFIS)*

**Transaction Types are not listed for feeder system Transaction Codes (TCs) because of the variance for different fund types (e.g., reimbursable vs. nonreimbursable)*

***Note:** All pertinent Budget Execution Tables and General Ledger Tables are updated by the TCs but are not listed in this matrix.*

System:	TRVL							
Expenditure/Receivable Type:	Temporary Duty (TDY)							
Procedure Reference(s):	**FED**	**DR**	**RD**	**NFC**				
	FTRs	ATRs 2300	2036–A 2039–A	Title II, Ch. 2, Sec. 1 Title VI, Ch. 6, Sec. 1, 2, and 3				
Transaction	**Commitment**	**Obligation**	**Receiver**	**Payment**	**Adjustments**	**Billing**	**Cash Receipt**	**Write Off**
Forms		AD–202 AD–202M SF–1164		AD–616 SF–1164				
TC/TT (D, F, or G)	N/A	XO(F) Document reference not required		XT (F) Document reference not required – Generated from feeder system				
Update Table		TIDT, TOHT, TOLT		PVHT, PVLT, TIDT, TVHT, TVAT				

Rural Development FFIS Processing Matrix For Spending

(TC/TT – Transaction Code/Transaction Type; D–Direct Entry Into FFIS; F–Transaction Generated from Feeder System into FFIS; G–Generated from FFIS)*

**Transaction Types are not listed for feeder system Transaction Codes (TCs) because of the variance for different fund types (e.g., reimbursable vs. nonreimbursable)*

***Note:** All pertinent Budget Execution Tables and General Ledger Tables are updated by the TCs but are not listed in this matrix.*

System:	TRVL							
Expenditure/Receivable Type:	Relocation							
Procedure Reference(s):	**FED**	**DR**	**RD**	**NFC**				
	FTRs	2300 ATRs	2036–A 2039–A	Title II, Ch. 2, Sec. 1 Title VI, Ch. 6, Sec. 1 and 3 Title VI, Ch. 6, Sec. 2				
Transaction	**Commitment**	**Obligation**	**Receiver**	**Payment**	**Adjustments**	**Billing**	**Cash Receipt**	**Write Off**
Forms		AD–202 AD–202M AD–202R AD–202RE		AD–616 AD–616R				
TC/TT (D, F, or G)	N/A	XO (F)		XV (F)				
Update Table		TIDT, TOHT, TOLT		PVHT, PVLT, TIDT, TVAT, TVHT				

Rural Development FFIS Processing Matrix For Spending

(TC/TT – Transaction Code/Transaction Type; D–Direct Entry Into FFIS; F–Transaction Generated from Feeder System into FFIS; G–Generated from FFIS)*

**Transaction Types are not listed for feeder system Transaction Codes (TCs) because of the variance for different fund types (e.g., reimbursable vs. nonreimbursable)*

***Note:** All pertinent Budget Execution Tables and General Ledger Tables are updated by the TCs but are not listed in this matrix.*

System:	TRVL							
Expenditure/Receivable Type:	Relocation							
Procedure Reference(s):	**FED**	**DR**	**RD**	**NFC**				
	FTRs	ATRs 2300	2036–A 2039–A	Title II, Ch. 2, Sec. 1 Title VI, Ch. 6, Sec. 1, 2, and 3				
Transaction	**Commitment**	**Obligation**	**Receiver**	**Payment**	**Adjustments**	**Billing**	**Cash Receipt**	**Write Off**
Forms		AD–202R AD–202RE		AD–616R				
TC/TT (D, F, or G)	N/A	XO (F) Document reference not required		XV (F) Document reference not required – Generated from feeder system				
Update Table		TIDT, TOHT, TOLT		PVHT, PVLT, TIDT, TPLT				

Rural Development FFIS Processing Matrix For Spending

(TC/TT – Transaction Code/Transaction Type; D–Direct Entry Into FFIS; F–Transaction Generated from Feeder System into FFIS; G–Generated from FFIS)*

**Transaction Types are not listed for feeder system Transaction Codes (TCs) because of the variance for different fund types (e.g., reimbursable vs. nonreimbursable)*

***Note:** All pertinent Budget Execution Tables and General Ledger Tables are updated by the TCs but are not listed in this matrix.*

System:	TRVL							
Expenditure/Receivable Type:	Third Party (Relocation Service)							
Procedure Reference(s):	**FED**	**DR**	**RD**	**NFC**				
	FTRs	ATRs 2300	2036–A 2039–A	Title II, Ch. 2, Sec. 1 Title VI, Ch. 6, Sec. 1, 2, and 3				
Transaction	**Commitment**	**Obligation**	**Receiver**	**Payment**	**Adjustments**	**Billing**	**Cash Receipt**	**Write Off**
Forms		AD–202R AD–202RE		AD–616R				
TC/TT (D, F, or G)	N/A	XO (F) Document reference not required		XP (F) Document reference not required – Generated from feeder system				
Update Table		TIDT, TOHT, TOLT		PVHT, PVLT, TIDT, TPLT				

Rural Development FFIS Processing Matrix For Spending

(TC/TT – Transaction Code/Transaction Type; D–Direct Entry Into FFIS; F–Transaction Generated from Feeder System into FFIS; G–Generated from FFIS)*

**Transaction Types are not listed for feeder system Transaction Codes (TCs) because of the variance for different fund types (e.g., reimbursable vs. nonreimbursable)*

***Note:** All pertinent Budget Execution Tables and General Ledger Tables are updated by the TCs but are not listed in this matrix.*

System:	Transportation System (TRAN)							
Expenditure/Receivable Type:	Government Transportation Requests (GTRs)							
Procedure Reference(s):	**FED**	**DR**	**RD**	**NFC**				
	FTRs	ATRs	2036–A 2039–A	Title II, Ch. 2, Sec. 1 and 3				
Transaction	**Commitment**	**Obligation**	**Receiver**	**Payment**	**Adjustments**	**Billing**	**Cash Receipt**	**Write Off**
Forms				SF–1113 SF–1169				
TC/TT (D, F, or G)				TI (F) Document reference not required – Generated from feeder system				
Update Table				GIDT, PVHT, PVLT, TNHT, TNLT				

Rural Development FFIS Processing Matrix For Spending

(TC/TT – Transaction Code/Transaction Type; D–Direct Entry Into FFIS; F–Transaction Generated from Feeder System into FFIS; G–Generated from FFIS)*

**Transaction Types are not listed for feeder system Transaction Codes (TCs) because of the variance for different fund types (e.g., reimbursable vs. nonreimbursable)*

***Note:** All pertinent Budget Execution Tables and General Ledger Tables are updated by the TCs but are not listed in this matrix.*

System:	TRAN							
Expenditure/Receivable Type:	Government Bills of Lading (GBL)							
Procedure Reference(s):	**FED**	**DR**	**RD**	**NFC**				
	FTRs	ATRs		Title II, Ch. 2, Sec. 4				
Transaction	**Commitment**	**Obligation**	**Receiver**	**Payment**	**Adjustments**	**Billing**	**Cash Receipt**	**Write Off**
Forms				SF–1103 SF–1109 SF–1200 SF–1203				
TC/TT (D, F, or G)				T2 (F) Document reference not required – Generated from feeder system				
Update Table				GIDT, PVHT, PVLT, TPLT				

Rural Development FFIS Processing Matrix For Spending

(TC/TT – Transaction Code/Transaction Type; D–Direct Entry Into FFIS; F–Transaction Generated from Feeder System into FFIS; G–Generated from FFIS)*

**Transaction Types are not listed for feeder system Transaction Codes (TCs) because of the variance for different fund types (e.g., reimbursable vs. nonreimbursable)*

***Note:** All pertinent Budget Execution Tables and General Ledger Tables are updated by the TCs but are not listed in this matrix.*

System:	Government Transportation System (GVTS)							
Expenditure/Receivable Type:								
Procedure Reference(s):	**FED**	**DR**	**RD**	**NFC**				
	FTRs	ATRs	2036–A 2039–A	Title II, Ch. 2, Sec. 5				
Transaction	**Commitment**	**Obligation**	**Receiver**	**Payment**	**Adjustments**	**Billing**	**Cash Receipt**	**Write Off**
Forms				Electronic Invoice				
TC/TT (D, F, or G)				GI (F) Travel Agency Invoice G2 (F) Traveler Detail Document reference not required – Generated from feeder system	G3 (F) Clearing Account Reversal			
Update Table				G1 – GSCH, PVHT, PVLT G2 – GIDT, GSCL, PVHT, PVLT, TNHT, TNLT	JVLT			

Rural Development FFIS Processing Matrix For Spending

(TC/TT – Transaction Code/Transaction Type; D–Direct Entry Into FFIS; F–Transaction Generated from Feeder System into FFIS; G–Generated from FFIS)*

**Transaction Types are not listed for feeder system Transaction Codes (TCs) because of the variance for different fund types (e.g., reimbursable vs. nonreimbursable)*

***Note:** All pertinent Budget Execution Tables and General Ledger Tables are updated by the TCs but are not listed in this matrix.*

System:	GSA Motor Pool System (MPOL) (page 1 of 2)							
Expenditure/Receivable Type:								
Procedure Reference(s):	**FED**	**DR**	**RD**	**NFC**				
	FTRs	ATRs 5400		Title II, Ch. 4, Sec. 2				
Transaction	**Commitment**	**Obligation**	**Receiver**	**Payment**	**Adjustments**	**Billing**	**Cash Receipt**	**Write Off**
Forms	Estimate prepared by Organization AD-643 AD-644 Account establishment			Invoice				
TC/TT (D, F, or G)	CM/RD (D) Annual Estimate Establish REJV Record. (Entry in the REJV will automatically reduce commitment based on recurring payment cycle) CM/RD (G) Recurring			DM (F–OPAC) Document reference not required	VM (F)			

Rural Development FFIS Processing Matrix For Spending

(TC/TT – Transaction Code/Transaction Type; D–Direct Entry Into FFIS; F–Transaction Generated from Feeder System into FFIS; G–Generated from FFIS)*

**Transaction Types are not listed for feeder system Transaction Codes (TCs) because of the variance for different fund types (e.g., reimbursable vs. nonreimbursable)*

***Note:** All pertinent Budget Execution Tables and General Ledger Tables are updated by the TCs but are not listed in this matrix.*

System:	GSA Motor Pool System (MPOL) (page 2 of 2)							
Expenditure/Receivable Type:								
Procedure Reference(s):	**FED**	**DR**	**RD**	**NFC**				
	FTRs	ATRs 5400		Title II, Ch. 4, Sec. 2				
Transaction	**Commitment**	**Obligation**	**Receiver**	**Payment**	**Adjustments**	**Billing**	**Cash Receipt**	**Write Off**
Update Table	JVLT			GIDT, PVHT, PVLT	JVLT, RVJV			

Rural Development FFIS Processing Matrix For Spending

(TC/TT – Transaction Code/Transaction Type; D–Direct Entry Into FFIS; F–Transaction Generated from Feeder System into FFIS; G–Generated from FFIS)*

**Transaction Types are not listed for feeder system Transaction Codes (TCs) because of the variance for different fund types (e.g., reimbursable vs. nonreimbursable)*

***Note:** All pertinent Budget Execution Tables and General Ledger Tables are updated by the TCs but are not listed in this matrix.*

System:	Telephone Vendors System (TELE) (page 1 of 3)						
Expenditure/Receivable Type:							
Procedure Reference(s):	**FED**	**DR**	**RD**	**NFC**			
		3300	2030–B	Title II, Ch. 3, Sec. 3			

Transaction	**Commitment**	**Obligation**	**Receiver**	**Payment**	**Adjustments**	**Billing**	**Cash Receipt**	**Write Off**
Forms	Estimate provided by Organization AD–474 Account establishment			AD–474 Vendor Invoice				

Rural Development FFIS Processing Matrix For Spending

(TC/TT – Transaction Code/Transaction Type; D–Direct Entry Into FFIS; F–Transaction Generated from Feeder System into FFIS; G–Generated from FFIS)*

**Transaction Types are not listed for feeder system Transaction Codes (TCs) because of the variance for different fund types (e.g., reimbursable vs. nonreimbursable)*

***Note:** All pertinent Budget Execution Tables and General Ledger Tables are updated by the TCs but are not listed in this matrix.*

System:	Telephone Vendors System (TELE) (page 2 of 3)							
Expenditure/Receivable Type:								
Procedure Reference(s):	**FED**	**DR**	**RD**	**NFC**				
		3300	2030–B	Title II, Ch. 3, Sec. 3				
Transaction	**Commitment**	**Obligation**	**Receiver**	**Payment**	**Adjustments**	**Billing**	**Cash Receipt**	**Write Off**
TC/TT (D, F, or G)	CM/RD (D) Annual Estimate Establish REJV Record. (Entry in the REJV will automatically reduce commitment based on recurring payment cycle.) CM/RD (G) Recurring			VT (F) Document reference not required	SE (F)			

Rural Development FFIS Processing Matrix For Spending

(TC/TT – Transaction Code/Transaction Type; D–Direct Entry Into FFIS; F–Transaction Generated from Feeder System into FFIS; G–Generated from FFIS)*

**Transaction Types are not listed for feeder system Transaction Codes (TCs) because of the variance for different fund types (e.g., reimbursable vs. nonreimbursable)*

***Note:** All pertinent Budget Execution Tables and General Ledger Tables are updated by the TCs but are not listed in this matrix.*

System:	Telephone Vendors System (TELE) (page 3 of 3)							
Expenditure/Receivable Type:								
Procedure Reference(s):	**FED**	**DR**	**RD**	**NFC**				
		3300	2030–B	Title II, Ch. 3, Sec. 3				
Transaction	**Commitment**	**Obligation**	**Receiver**	**Payment**	**Adjustments**	**Billing**	**Cash Receipt**	**Write Off**
Update Table	JVLT			GIDT, PVHT, PVLT	JVLT, RVJV			

Rural Development FFIS Processing Matrix For Spending

(TC/TT – Transaction Code/Transaction Type; D–Direct Entry Into FFIS; F–Transaction Generated from Feeder System into FFIS; G–Generated from FFIS)*

**Transaction Types are not listed for feeder system Transaction Codes (TCs) because of the variance for different fund types (e.g., reimbursable vs. nonreimbursable)*

***Note:** All pertinent Budget Execution Tables and General Ledger Tables are updated by the TCs but are not listed in this matrix.*

System:	Federal Telephone System Payments (FTSP)							
Expenditure/Receivable Type:	FTS 2001							
Procedure Reference(s):	**FED**	**DR**	**RD**	**NFC**				
		3300	2030–B	Title II, Ch. 4, Sec. 5				
Transaction	**Commitment**	**Obligation**	**Receiver**	**Payment**	**Adjustments**	**Billing**	**Cash Receipt**	**Write Off**
Forms	Estimate provided by Organization AD–955 Account establishment			AD–955 GSA Billing				
TC/TT (D, F, or G)	CM/RD (D) Annual Estimate Establish REJV Record. (Entry in the REJV will automatically reduce commitment based on recurring payment cycle.) CM/RD (G) Recurring			DF (F–OPAC) Document reference not required	VF (F)			
Update Table	JVLT			GIDT, PVHT, PVLT	JVLT, RVJV			

Rural Development FFIS Processing Matrix For Spending

(TC/TT – Transaction Code/Transaction Type; D–Direct Entry Into FFIS; F–Transaction Generated from Feeder System into FFIS; G–Generated from FFIS)*

**Transaction Types are not listed for feeder system Transaction Codes (TCs) because of the variance for different fund types (e.g., reimbursable vs. nonreimbursable)*

***Note:** All pertinent Budget Execution Tables and General Ledger Tables are updated by the TCs but are not listed in this matrix.*

System:	Utility Vendors System (UTVN)							
Expenditure/Receivable Type:								
Procedure Reference(s):	**FED**	**DR**	**RD**	**NFC**				
				Title II, Ch. 3, Sec. 1				
Transaction	**Commitment**	**Obligation**	**Receiver**	**Payment**	**Adjustments**	**Billing**	**Cash Receipt**	**Write Off**
Forms	Estimate provided by Organization AD–474 Account establishment			Vendor Invoice				
TC/TT (D, F, or G)	CM/RD (D) Annual Estimate Establish REJV Record. (Entry in the REJV will automatically reduce commitment based on recurring payment cycle.) CM/RD (G) Recurring			UV (F) Document reference not required	SU (F)			
Update Table	JVLT			GIDT, PVHT, PVLT, VTXT	JVLT, RVJV			

Rural Development FFIS Processing Matrix For Spending

(TC/TT – Transaction Code/Transaction Type; D–Direct Entry Into FFIS; F–Transaction Generated from Feeder System into FFIS; G–Generated from FFIS)*

**Transaction Types are not listed for feeder system Transaction Codes (TCs) because of the variance for different fund types (e.g., reimbursable vs. nonreimbursable)*

***Note:** All pertinent Budget Execution Tables and General Ledger Tables are updated by the TCs but are not listed in this matrix.*

System:	Payroll (PACS)							
Expenditure/Receivable Type:	(Salaries and Benefits)							
Procedure Reference(s):	**FED**	**DR**	**RD**	**NFC**				
				Title I, Ch. 1, Sec. 1				
Transaction	**Commitment**	**Obligation**	**Receiver**	**Payment**	**Adjustments**	**Billing**	**Cash Receipt**	**Write Off**
Forms								
TC/TT (D, F, or G)	CM/RD (D) Annual Estimate Establish REJV Record. (Entry in the REJV will automatically reduce commitment based on recurring payment cycle.) CM/RD (G) Recurring (monthly amount)							
Update Table	JVLT							

Rural Development FFIS Processing Matrix For Spending

(TC/TT – Transaction Code/Transaction Type; D–Direct Entry Into FFIS; F–Transaction Generated from Feeder System into FFIS; G–Generated from FFIS)*

**Transaction Types are not listed for feeder system Transaction Codes (TCs) because of the variance for different fund types (e.g., reimbursable vs. nonreimbursable)*

***Note:** All pertinent Budget Execution Tables and General Ledger Tables are updated by the TCs but are not listed in this matrix.*

System:	Federal Standard Requisitioning and Issue Procedures System (FEDSTRIP)							
Expenditure/Receivable Type:								
Procedure Reference(s):	**FED**	**DR**	**RD**	**NFC**				
	48 CFR	5000	2024–A	Title II, Ch. 4, Sec. 1 Title VI, Ch. 7, Sec. 9 and Sec. 10				
Transaction	**Commitment**	**Obligation**	**Receiver**	**Payment**	**Adjustments**	**Billing**	**Cash Receipt**	**Write Off**
Forms	AD–700	AD–633		GSA Invoice				
TC/TT (D, F, or G)	RQ/01 (D)	FO (F) Requires manual entry of document reference number		FV (F) OD (F–OPAC) Document reference not required – Generated from feeder system	SF (F)			
Update Table	REQH, REQL	GIDT, OBLH, OBLL, REQH, REQL		GIDT, OBLH, OBLL, PVHT, PVLT	JVLT, RVJV			

Rural Development FFIS Processing Matrix For Spending

(TC/TT – Transaction Code/Transaction Type; D–Direct Entry Into FFIS; F–Transaction Generated from Feeder System into FFIS; G–Generated from FFIS)*

**Transaction Types are not listed for feeder system Transaction Codes (TCs) because of the variance for different fund types (e.g., reimbursable vs. nonreimbursable)*

***Note:** All pertinent Budget Execution Tables and General Ledger Tables are updated by the TCs but are not listed in this matrix.*

System:								
Expenditure/Receivable Type:	Miscellaneous Obligations/Payments (FFIS replaces MISC) (page 1 of 2)							
Procedure Reference(s):	**FED**	**DR**	**RD**	**NFC**				
				Title II, Ch. 6, Sec. 6				
Transaction	**Commitment**	**Obligation**	**Receiver**	**Payment**	**Adjustments**	**Billing**	**Cash Receipt**	**Write Off**
Forms	AD–700 FSA–875	AD–672 AD–673 GPO–2511 GSA–50 GSA–2957 GSA–2972 RECD 300–70 SF–1 SF–238 Send all OPAC related documents to NFC (Administrative Payments Branch, OPAC Processing Team) with Document Reference Number on form		Invoice from Commercial Vendor OPAC Bill from Treasury				

Rural Development FFIS Processing Matrix For Spending

(TC/TT – Transaction Code/Transaction Type; D–Direct Entry Into FFIS; F–Transaction Generated from Feeder System into FFIS; G–Generated from FFIS)*

**Transaction Types are not listed for feeder system Transaction Codes (TCs) because of the variance for different fund types (e.g., reimbursable vs. nonreimbursable)*

***Note:** All pertinent Budget Execution Tables and General Ledger Tables are updated by the TCs but are not listed in this matrix.*

System:								
Expenditure/Receivable Type:	Miscellaneous Obligations/Payments (FFIS replaces MISC) (page 2 of 2)							
Procedure Reference(s):	**FED**	**DR**	**RD**	**NFC**				
				Title II, Ch. 6, Sec. 6				
Transaction	**Commitment**	**Obligation**	**Receiver**	**Payment**	**Adjustments**	**Billing**	**Cash Receipt**	**Write Off**
TC/TT (D, F, or G)	RQ/01 (D)	MO/01 (D) Requires manual entry of document reference number		PV/01 (D) DD/OP (F–OPAC) Requires manual entry of document reference number				
Update Table	REQH, REQL	REQH, REQL, OBLH, OBLL		OBLH, OBLL, PVHT, PVLT				

Rural Development FFIS Processing Matrix For Spending

(TC/TT – Transaction Code/Transaction Type; D–Direct Entry Into FFIS; F–Transaction Generated from Feeder System into FFIS; G–Generated from FFIS)*

**Transaction Types are not listed for feeder system Transaction Codes (TCs) because of the variance for different fund types (e.g., reimbursable vs. nonreimbursable)*

***Note:** All pertinent Budget Execution Tables and General Ledger Tables are updated by the TCs but are not listed in this matrix.*

System:								
Expenditure/Receivable Type:	Transfer of Funds Modification							
Procedure Reference(s):	**FED**	**DR**	**RD**	**NFC**				
			2009–A 2009–B 2009–C 2009–D	Title VI, Ch. 8, Sec. 5				
Transaction	**Commitment**	**Obligation**	**Receiver**	**Payment**	**Adjustments**	**Billing**	**Cash Receipt**	**Write Off**
Forms					SF–132			
TC/TT (D, F, or G)					SV/01 (D) Only Functional Administrator can input			
Update Table					JVLT			

Rural Development FFIS Processing Matrix For Spending

(TC/TT – Transaction Code/Transaction Type; D–Direct Entry Into FFIS; F–Transaction Generated from Feeder System into FFIS; G–Generated from FFIS)*

**Transaction Types are not listed for feeder system Transaction Codes (TCs) because of the variance for different fund types (e.g., reimbursable vs. nonreimbursable)*

***Note:** All pertinent Budget Execution Tables and General Ledger Tables are updated by the TCs but are not listed in this matrix.*

System:								
Expenditure/Receivable Type:	Government Transfer Between External Agencies							
Procedure Reference(s):	**FED**	**DR**	**RD**	**NFC**				
	TFM, Vol. 1, Part II, Ch. 2500							
Transaction	**Commitment**	**Obligation**	**Receiver**	**Payment**	**Adjustments**	**Billing**	**Cash Receipt**	**Write Off**
Forms	SF–1081	SF–1081		SF–1081				
TC/TT (D, F, or G)	RQ/01 (D)	MO/01 (D) Requires manual entry of document reference number		PV/01 (D) Requires manual entry of document reference number				
Update Table	REQH, REQL	REQH, REQL, OBLH, OBLL		OBLH, OBLL, PVHT, PVLT				

Rural Development FFIS Processing Matrix For Spending

(TC/TT – Transaction Code/Transaction Type; D–Direct Entry Into FFIS; F–Transaction Generated from Feeder System into FFIS; G–Generated from FFIS)*

**Transaction Types are not listed for feeder system Transaction Codes (TCs) because of the variance for different fund types (e.g., reimbursable vs. nonreimbursable)*

***Note:** All pertinent Budget Execution Tables and General Ledger Tables are updated by the TCs but are not listed in this matrix.*

System:								
Expenditure/Receivable Type:	College/State Grants (RD pays for cooperative agreements/scholarships)							
Procedure Reference(s):	**FED**	**DR**	**RD**	**NFC**				
			Budget Division written (unnumbered procedures)					
Transaction	**Commitment**	**Obligation**	**Receiver**	**Payment**	**Adjustments**	**Billing**	**Cash Receipt**	**Write Off**
Forms	AD–672 Written Agreement							
TC/TT (D, F, or G)	RQ/01 (D)	MO/01 (D) Requires manual entry of document reference number		PV/01 (D) Requires manual entry of document reference number				
Update Table	REQH, REQL	OBLH, OBLL, REQH, REQL		OBLH, OBLL, PVHT, PVLT				

Rural Development FFIS Processing Matrix For Spending

(TC/TT – Transaction Code/Transaction Type; D–Direct Entry Into FFIS; F–Transaction Generated from Feeder System into FFIS; G–Generated from FFIS)*

**Transaction Types are not listed for feeder system Transaction Codes (TCs) because of the variance for different fund types (e.g., reimbursable vs. nonreimbursable)*

***Note:** All pertinent Budget Execution Tables and General Ledger Tables are updated by the TCs but are not listed in this matrix.*

System:								
Expenditure/Receivable Type:	Security Clearances – Employees Only (Clearances for contractor personnel not paid by RD) (page 1 of 2)							
Procedure Reference(s):	**FED**	**DR**	**RD**	**NFC**				
	5 CFR Part 732 Fair Credit Reporting Act of 1970							
Transaction	**Commitment**	**Obligation**	**Receiver**	**Payment**	**Adjustments**	**Billing**	**Cash Receipt**	**Write Off**
Forms	SF–85 SF–85P SF–86 Send all OPAC related documents to NFC (Administrative Payments Branch OPAC Processing Team) with Document Reference Number on form							

Rural Development FFIS Processing Matrix For Spending

(TC/TT – Transaction Code/Transaction Type; D–Direct Entry Into FFIS; F–Transaction Generated from Feeder System into FFIS; G–Generated from FFIS)*

**Transaction Types are not listed for feeder system Transaction Codes (TCs) because of the variance for different fund types (e.g., reimbursable vs. nonreimbursable)*

***Note:** All pertinent Budget Execution Tables and General Ledger Tables are updated by the TCs but are not listed in this matrix.*

System:								
Expenditure/Receivable Type:	Security Clearances – Employees Only (Clearances for contractor personnel not paid by RD) (page 2 of 2)							
Procedure Reference(s):	**FED**	**DR**	**RD**	**NFC**				
	5 CFR Part 732 Fair Credit Reporting Act of 1970							
Transaction	**Commitment**	**Obligation**	**Receiver**	**Payment**	**Adjustments**	**Billing**	**Cash Receipt**	**Write Off**
TC/TT (D, F, or G)	RQ/01 (D)			DD/OP (F–OPAC) Requires manual entry of document reference number				
Update Table	REQH, REQL			PVHT, PVLT, REQH, REQL				

Rural Development FFIS Processing Matrix For Spending

(TC/TT – Transaction Code/Transaction Type; D–Direct Entry Into FFIS; F–Transaction Generated from Feeder System into FFIS; G–Generated from FFIS)*

**Transaction Types are not listed for feeder system Transaction Codes (TCs) because of the variance for different fund types (e.g., reimbursable vs. nonreimbursable)*

***Note:** All pertinent Budget Execution Tables and General Ledger Tables are updated by the TCs but are not listed in this matrix.*

System:								
Expenditure/Receivable Type:	Awards							
Procedure Reference(s):	**FED**	**DR**	**RD**	**NFC**				
			LMR Contracts Letter dated 07/22/99, subject: Employee Recognition Program					
Transaction	**Commitment**	**Obligation**	**Receiver**	**Payment**	**Adjustments**	**Billing**	**Cash Receipt**	**Write Off**
Forms	AD–287–2 SCA–4130			AD–287–2 SCA–4130				
TC/TT (D, F, or G)	RQ/01 (D–Establish) RQ/01 (D–Cancel) subsequent to PCMS or PACS reconciliation)			Payment Processed through PCMS or PACS Document reference not required				
Update Table	REQH, REQL							

Rural Development FFIS Processing Matrix For Spending

(TC/TT – Transaction Code/Transaction Type; D–Direct Entry Into FFIS; F–Transaction Generated from Feeder System into FFIS; G–Generated from FFIS)*

**Transaction Types are not listed for feeder system Transaction Codes (TCs) because of the variance for different fund types (e.g., reimbursable vs. nonreimbursable)*

***Note:** All pertinent Budget Execution Tables and General Ledger Tables are updated by the TCs but are not listed in this matrix.*

System:								
Expenditure/Receivable Type:	Lump Sum Payments							
Procedure Reference(s):	**FED**	**DR**	**RD**	**NFC**				
	5 CFR 610							
Transaction	**Commitment**	**Obligation**	**Receiver**	**Payment**	**Adjustments**	**Billing**	**Cash Receipt**	**Write Off**
Forms	AD–581			Payments Processed through PACS Document reference not required				
TC/TT (D, F, or G)	RQ/01 (D–Cancel Subsequent to PACS reconciliation)							
Update Table	REQH, REQL							

Rural Development FFIS Processing Matrix For Spending

(TC/TT – Transaction Code/Transaction Type; D–Direct Entry Into FFIS; F–Transaction Generated from Feeder System into FFIS; G–Generated from FFIS)*

**Transaction Types are not listed for feeder system Transaction Codes (TCs) because of the variance for different fund types (e.g., reimbursable vs. nonreimbursable)*

***Note:** All pertinent Budget Execution Tables and General Ledger Tables are updated by the TCs but are not listed in this matrix.*

System:								
Expenditure/Receivable Type:	EEO Cash Settlements (Excluding EEO Backpay)							
Procedure Reference(s):	**FED**	**DR**	**RD**	**NFC**				
			2045–X					
Transaction	**Commitment**	**Obligation**	**Receiver**	**Payment**	**Adjustments**	**Billing**	**Cash Receipt**	**Write Off**
Forms	Settlement Agreement for Compensatory Damages			Budget-Generated Payment Form				
TC/TT (D, F, or G)	RQ/01 (D)			PV/01 (D) Requires manual entry of document reference number				
Update Table	REQH, REQL			PVHT, PVLT, REQH, REQL				

Rural Development FFIS Processing Matrix For Spending

(TC/TT – Transaction Code/Transaction Type; D–Direct Entry Into FFIS; F–Transaction Generated from Feeder System into FFIS; G–Generated from FFIS)*

**Transaction Types are not listed for feeder system Transaction Codes (TCs) because of the variance for different fund types (e.g., reimbursable vs. nonreimbursable)*

***Note:** All pertinent Budget Execution Tables and General Ledger Tables are updated by the TCs but are not listed in this matrix.*

System:								
Expenditure/Receivable Type:		Greenbook Charges						
Procedure Reference(s):		**FED**	**DR**	**RD**	**NFC**			
			1043–40		Title II, Ch. 6, Sec. 6			
Transaction	**Commitment**	**Obligation**	**Receiver**	**Payment**	**Adjustments**	**Billing**	**Cash Receipt**	**Write Off**
Forms	Annual Estimate form Department (National Office Budget Division)	AD–673		AD–673				
TC/TT (D, F, or G)	RQ/01 (D)	MO/01 (D) Requires manual entry of document reference number		DD/OP (F–OPAC) Requires manual entry of document reference number				
Update Table	REQH, REQL	OBLH, OBLL, REQH, REQL		OBLH, OBLL, PVHT, PVLT				

Rural Development FFIS Processing Matrix For Spending

(TC/TT – Transaction Code/Transaction Type; D–Direct Entry Into FFIS; F–Transaction Generated from Feeder System into FFIS; G–Generated from FFIS)*

**Transaction Types are not listed for feeder system Transaction Codes (TCs) because of the variance for different fund types (e.g., reimbursable vs. nonreimbursable)*

***Note:** All pertinent Budget Execution Tables and General Ledger Tables are updated by the TCs but are not listed in this matrix.*

System:								
Expenditure/Receivable Type:	Tort Claims							
Procedure Reference(s):	**FED**	**DR**	**RD**	**NFC**				
	31 U.S.C., Sec.1304		2042–A					
Transaction	**Commitment**	**Obligation**	**Receiver**	**Payment**	**Adjustments**	**Billing**	**Cash Receipt**	**Write Off**
Forms	FMS–195			FMS–196 FMS–197				
TC/TT (D, F, or G)	RQ/01 (D)			PV/01 (D) Requires manual entry of document reference number				
Update Table	REQH, REQL			PVHT, PVLT, REQH, REQL				

Rural Development FFIS Processing Matrix For Spending

(TC/TT – Transaction Code/Transaction Type; D–Direct Entry Into FFIS; F–Transaction Generated from Feeder System into FFIS; G–Generated from FFIS)*

**Transaction Types are not listed for feeder system Transaction Codes (TCs) because of the variance for different fund types (e.g., reimbursable vs. nonreimbursable)*

***Note:** All pertinent Budget Execution Tables and General Ledger Tables are updated by the TCs but are not listed in this matrix.*

System:	Period End Estimates							
Expenditure/Receivable Type:								
Procedure Reference(s):	**FED**	**DR**	**RD**	**NFC**				
	GAO Manual Title 7 JFMIP							
Transaction	**Commitment**	**Obligation**	**Receiver**	**Payment**	**Adjustments**	**Billing**	**Cash Receipt**	**Write Off**
Forms					Memo from Budget Division			
TC/TT (D, F, or G)					SV/DE (D) Paid Obligation SV/UN (D) Unliquidated Obligation			
Update Table					JVLT			

Rural Development FFIS Processing Matrix For Accounts Receivable

(TC/TT – Transaction Code/Transaction Type; D–Direct Entry Into FFIS; F–Transaction Generated from Feeder System into FFIS; G–Generated from FFIS)*

**Transaction Types are not listed for feeder system Transaction Codes (TCs) because of the variance for different fund types (e.g., reimbursable vs. nonreimbursable)*

***Note:** All pertinent Budget Execution Tables and General Ledger Tables are updated by the TCs but are not listed in this matrix.*

System:								
Expenditure/Receivable Type:		Accounts Receivable Where Agency Generates Billing Document (e.g., Government Refunds, Commercial Refunds, Third Party Debts, Reimbursements from Tenant Agencies to Lead Agencies, Reimbursements from 1890 Colleges and Universities, Recovering Funds for Invalid or Erroneous GSA Rents, etc.) (page 1 of 2)						
Procedure Reference(s):		**FED**	**DR**	**RD**	**NFC**			
		41 CFR 48 CFR	5000	2024–A	Title II, Ch. 6, Sec. 6 Title III, Ch. 4			
Transaction	**Commitment**	**Obligation**	**Receiver**	**Payment**	**Adjustments**	**Billing**	**Cash Receipt**	**Write Off**
Forms						AD–673 Supporting Doc. AD–672 AD–838 GPO–2511 GSA–50 GSA–2957 GSA–2972 RECD 300–70 SF–238 SF–1080 SF–1081 Vendor ID required on all receivable documents submitted to NFC.)	NFC–631	

Rural Development FFIS Processing Matrix For Accounts Receivable

(TC/TT – Transaction Code/Transaction Type; D–Direct Entry Into FFIS; F–Transaction Generated from Feeder System into FFIS; G–Generated from FFIS)*

**Transaction Types are not listed for feeder system Transaction Codes (TCs) because of the variance for different fund types (e.g., reimbursable vs. nonreimbursable)*

***Note:** All pertinent Budget Execution Tables and General Ledger Tables are updated by the TCs but are not listed in this matrix.*

System:									
Expenditure/Receivable Type:		Accounts Receivable Where Agency Generates Billing Document (e.g., Government Refunds, Commercial Refunds, Third Party Debts, Reimbursements from Tenant Agencies to Lead Agencies, Reimbursements from 1890 Colleges and Universities, Recovering Funds for Invalid or Erroneous GSA Rents, etc.) (page 2 of 2)							
Procedure Reference(s):		**FED**	**DR**	**RD**	**NFC**				
		41 CFR 48 CFR	5000	2024–A	Title II, Ch. 6, Sec. 6 Title III, Ch. 4				
Transaction	**Commitment**	**Obligation**	**Receiver**	**Payment**	**Adjustments**	**Billing**	**Cash Receipt**	**Write Off**	
TC/TT (D, F, or G)						A1 (F–ABCO) NFC enters A1 (F–OPAC) NFC enters	A2 (F–ABCO) NFC enters A2 (F–OPAC) NFC enters	WR (F–ABCO) (Cannot write off a receivable from another Government agency.) Document reference not required – Generated from feeder system	
Update Table						ARCL, ARHT, ARLT, OBDT	ARCL, AREF, ARHT, ARLT, CRHT, CRLT, OBDT	ARCL, AREF, ARHT, ARLT, CRHT, CRLT	

Rural Development FFIS Processing Matrix For Accounts Receivable

(TC/TT – Transaction Code/Transaction Type; D–Direct Entry Into FFIS; F–Transaction Generated from Feeder System into FFIS; G–Generated from FFIS)*

**Transaction Types are not listed for feeder system Transaction Codes (TCs) because of the variance for different fund types (e.g., reimbursable vs. nonreimbursable)*

***Note:** All pertinent Budget Execution Tables and General Ledger Tables are updated by the TCs but are not listed in this matrix.*

System:								
Expenditure/Receivable Type:		Accounts Receivable Where Billing Not Generated (Unbilled Collections–e.g., jury duty reimbursements, travel agency rebates, Freedom of Information Act reimbursements, miscellaneous collections, etc.)						
Procedure Reference(s):		**FED**	**DR**	**RD**	**NFC**			
					Title III, Ch. 4			
Transaction	**Commitment**	**Obligation**	**Receiver**	**Payment**	**Adjustments**	**Billing**	**Cash Receipt**	**Write Off**
Forms							Memorandum with Accounting Data and Cash Remittance (Vendor ID required on all documents submitted to NFC)	
TC/TT (D, F, or G)						A1 (G–ABCO) Generated by A3 Document reference not required – Generated from feeder system	A3 (F–ABCO) NFC enters	
Update Table						ARCL, ARHT, ARLT, OBDT	ARCL, AREF, ARHT, ARLT, CRHT, CRLT, OBDT	

Feeder System Purposes

PRCH – Purchase Order System

- An automated data processing system which provides a complete procurement system for the purchase of goods and services from commercial or Government supply sources.

Type 40 Purchase Order

- Used to procure goods or services for a fixed cost and quantity with an anticipated one-time vendor payment.

Type 41 Purchase Order

- Used to procure subscriptions to newspapers, periodicals, and training cost from vendors.

Type 43 Purchase Order

- Used to procure goods and services with fixed or estimated price and quantity with anticipated one-time or recurring vendor payment and to document the contractual purchase of goods and services (e.g., temporary service employees, recurrent billing for special studies).

Type 45 Purchase Order

- Used for a blanket purchase agreement (BPA). An informal agreement between the agency and the vendor where funds are not obligated until the AD–838D and invoice are processed for payment.

PCMS – Purchase Card Management System

- Credit card system that may be used to purchase all commercially available goods and services under the micro-purchase threshold. Warranted contracting personnel and field office personnel with delegated authority can use the card up to their delegated contracting authority not to exceed $100,000.

TRVL – Travel System

- System which provides an integrated network for processing travel authorizations, travel advances, and travel vouchers for temporary duty (TDY) and relocation travel.

TRAN – Transportation System

- Obligation and disbursement system for Government Transportation Requests (GTR) and Government Bills of Lading (GBL).

GTRs

- Document used for procuring passenger transportation service for individuals authorized to travel on official business services to include group travel, quantity ticket purchases, teletype ticketing, charter, contract, and excess baggage.

GBLs

- Primary documents used for transportation of supplies, material, and personal property by commercial carriers.

GVTS – Government Transportation System

- A system which allows agencies to obtain transportation tickets for official travel from the appropriate travel management system and to charge the tickets to a unique agency Bank of America account instead of the individual traveler's Bank of America credit card or a Government Transportation Request (GTR).

MPOL – Motor Pool System

- System which processes documents related to the payment of General Services Administration (GSA) motor pool transportation services provided to agencies.

TELE – Telephone Vendors System

- System which processes documents related to the payment of telecommunications equipment and services provided to agencies by commercial telephone companies, long-distance carriers, and suppliers of telephone equipment.

FTSP – Federal Telecommunication System Payments

- System which enables the National Finance Center (NFC) to distribute Online Payment and Collections (OPAC) charges for commercial telephone tolls and services paid by GSA on behalf of Central Accounting System (CAS)-serviced agencies.

UTVN – Utility Vendors System

- System which provides for payment of commercial utility bills for electric, gas, water, sewerage, and trash services.

PACS – Payroll Accounting System

- System used to create accounting records based on the payroll disbursements initiated in the United States Department of Agriculture (USDA) Payroll System (PAYE).

FEDSTRIP – Federal Standard Requisitioning and Issue Procedures System

- System which provides for the obligation and payment of supplies and equipment ordered from GSA.

ABCO – Administrative Billings and Collections

- Accounts receivable system which provides a method for billing and collecting debts from Federal employees (current, separated, or retired), and other individuals or vendors having outstanding debts with the Government. Bills are established in ABCO for collection of: refunds (e.g., jury duty, employee refunds, travel voucher overpayments, travel agency rebates, travel advance repayments, fraudulent use of Government funds by employees); other refunds incidental to payment processed in commercial payments systems (e.g., refunds due from carriers for unused transportation services or from vendors for merchandise returned or not received); third party debts (e.g., vehicle damage, overpayment of a purchase contract); and special billings issued in association with reimbursable agreements and Working Capital Fund activities of the CAS and the Foundation Financial Information System (FFIS)-serviced agencies. ABCO also processes voluntary (unbilled) collections for which only accounting records are produced and no bill is required.

OPAC – Online Payment and Collection

- System used to bill and collect from other agencies for intragovernmental transactions for goods and services obtained through intragovernmental contracts. OPAC transactions include payments and collections for the following:

  1. Security clearances

  2. Government Printing Office (GPO) printing, binding, reproduction, and related services

  3. GSA services other than printing, binding, and related services

  4. Federal Telephone System Payments (FTSP) and Federal Telephone Service (FTS) 2001

  5. Special studies by other Government agencies

  6. Reimbursing and advancing funds

  7. Recovering funds for erroneous or invalid GSA rents

  8. Greenbook charges

Summary Of Feeder Transactions Listing

Feeder System	Document Name	FFIS Document	Related Inquiry Tables
ABCO	ABCO Billing Document – Billing Document	A1	ARHT, ARLT
	ABCO Cash Receipt Document – Cash Receipt Document	A2	CRHT, CRLT
	ABCO Voluntary Collection – Cash Receipt Document	A3	CRHT, CRLT
FEDS	FEDS Obligation	FO	OBLH, OBLL
	FEDS Payment Voucher	FV	PVHT, PVLT
	FEDS OPAC Disbursement	OD	PVHT, PVLT
	FEDS Standard Voucher Document	SF	JVLT
FTSP	FTSP OPAC Disbursement	DF	PVHT, PVLT
	FTSP Accrual/Suspense	VF	JVLT
GVTS	GVTS Payment Vouchers – Payment Voucher Document	G1	PVHT, PVLT
	GVTS Travel Invoice – Travel Invoice Document	G2	TNHT, TNLT, PVHT, PVLT
	GVTS Standard Voucher – Standard Document	G3	JVLT
MPOL	MPOL OPAC Disbursement	DM	PVHT, PVLT
PCMS	PCMS Payment Voucher	V2	PVHT, PVLT, GSCH
	PCMS Standard Voucher – Cardholder Modification	V5	JVLT, GSCL
	PCMS Standard Voucher – Cardholder Details	V8	JVLT, GSCL
PRCH	PRCH Type 40 Receiver	EA	RCHT, RCLA
	PRCH Type 40 Obligation	GA	OBLH, OBLL
	PRCH Type 41 Obligation	GC	OBLH, OBLL
	PRCH Type 43 Obligation	GD	OBLH, OBLL
	PRCH Type 40 OPAC Disbursement	KA	OBLH, OBLL
	PRCH Type 43 OPAC Disbursement	KD	PVHT, PVLT
	PRCH Standard Voucher	SP	PVHT, PVLT
	PRCH Type 40 Payment Voucher	VA	PVHT, PVLT
	PRCH Type 41 Payment Voucher	VC	JVLT
	PRCH Type 43 Payment Voucher	VD	PVHT, PVLT
	PRCH Type 45 Payment Voucher	VE	PVHT, PVLT
			PVHT, PVLT
			PVHT, PVLT
			PVHT, PVLT
TELE	TELE Accrual	SE	JVLT
	TELE Payment Voucher	VT	PVHT, PVLT
TRAN	TRAN Invoice	T1	TNHT, TNLT, PVHT, PVLT
	TRAN Third Party Payment Voucher	T2	PVHT, PVLT, TPLT

Feeder System	Document Name	FFIS Document	Related Inquiry Tables
TRVL	TRVL Advance	XA	TADV, THAT
	TRVL Travel Order	XO	TOHT, TOLT
	TRVL Payment Voucher (Relo)	XP	PVHT, PVLT, TPLT
	TRVL Travel Voucher (TDY)	XT	TVHT, TVAT, PVHT, PVLT
	TRVL Travel Voucher (Relo)	XV	TVHT, TVAT, PVHT, PVLT
UTVN	UTVN Accrual Document – Standard Voucher Document	SU	JVLT
	UTVN Payment Vouchers – Payment Voucher Document	UV	PVHT, PVLT

Feeder System Procedural References

United States Code

31 U.S.C., Sec. 1304	Money and Finance

United States Treasury Department

TFM Vol. I, Part 2, Ch. 2500	Treasury Financial manual, Expenditure Transactions between Appropriation, Fund, and Receipt Accounts

United States (Miscellaneous)

Fair Credit Reporting Act of 1970

Federal Regulations

5 CFR, Part 610	Civil Service Rules, Hours of Duty
5 CFR, Part 732	Civil Service Rules, National Security Position
41 CFR	Public Contracts and Property Management
48 CFR	Federal Acquisition Regulation (FAR) System
FTRs	Federal Travel Regulation
JFMIP	Joint Financial Management Improvement Program, Framework for Federal Financial Management Systems

Government Accounting Office

GAO Manual Title 7	GAOs Policy and Procedures manual for Guidance of Federal Agencies – Fiscal Guidance

Office of Management and Budget (OMB)

OMB Circular A–34	Instructions on Budget Execution

Rural Development (Miscellaneous)

Labor Management Relations (LMR) Contract, Article 15

LMR Contracts Letter dated 7/22/99, Subject: Employee Recognition Program

USDA Regulations (DRs)

DR 1043–40	Assignment of Responsibilities for Review and Oversight of Working Capital Fund Activities
DR 1600	Facilities and Space Management
DR 3300	Telecommunications Management
DR 4100	Employee Development, Performance, and Utilization
DR 5000	Procurement Management
DR 5100	Real Property Management
DR 5400	Fleet Management
ATRs	Agriculture Travel Regulation

Rural Development (RD) Instructions

2009–A	Budgets – Budgeting Controls and Reports
2009–B	Budgets – System of Administrative Control of Apportionments and Allotments
2009–C	Budgets – Accounting Distribution and Time and Attendance Contact Point Codes
2009–D	Budgets – Budgetary Allotment Codes and Titles
2021–A	Space – Space Policies and Procedures
2024–A	Property and Supply – Acquisition, Sales, and Leasing Authority
2027–B	Reproduction – Printing for Field Offices
2030–B	Communications – Telephone Management and Telephone Services – RD Finance, State, District, and County Offices
2036–A	Travel – Travel Regulations and Policies
2039–A	Change of Official Station – Change of Official Station
2042–A	Tort Claims – Claims under Federal Tort Claims Act
2045–X	Equal Employment Opportunity

Rural Development (RD) Instructions *(cont'd)*

2057–A	Training – RD Employee Training and Development Program

National Finance Center Procedures

Title I, Ch. 1, Sec. 1	Payroll/Personnel Manual, Payroll Accounting, Payroll Accounting System (PACS)
Title II, Ch. 2, Sec. 1	Voucher and Invoice Payments Manual, Travel and Transportation Payments, Travel System
Title II, Ch. 2, Sec. 3	Voucher and Invoice Payments Manual, Travel and Transportation Payments, Common Carriers – Government Transportation Requests (GTRS)
Title II, Ch. 2, Sec. 4	Voucher and Invoice Payments Manual, Travel and Transportation Payments, Common Carriers – Government Bills of Lading (GBLs)
Title II, Ch. 2, Sec. 5	Voucher and Invoice Payments Manual, Travel and Transportation Payments, Government Transportation System (GVTS)
Title II, Ch. 3, Sec. 3	Voucher and Invoice Payments Manual, Special Vendor Payments, Telephone Vendors System (TELE)
Title II, Ch. 4, Sec. 1	Voucher and Invoice Payments Manual, General Services Administration (GSA) Payment Transactions, Federal Standard Requisitioning and Issue Procedures System (FEDSTRIP)
Title II, Ch. 4, Sec. 2	Voucher and Invoice Payments Manual, General Services Administration (GSA) Payment Transactions, Motor Pool System (MPOL)
Title II, Ch. 4, Sec. 5	Voucher and Invoice Payments Manual, General Services Administration (GSA) Payment Transactions, Federal Telephone System Payments (FTSP)
Title II, Ch. 5, Sec. 1	Voucher and Invoice Payments Manual, Procurement Payment Activities, Purchase Order System (PRCH)
Title II, Ch. 6, Sec. 6	Voucher and Invoice Payments Manual, Other Payments, Online Payments and Collection (OPAC)
Title III, Ch. 4	Billings and Collections Manual, Administrative Billings and Collections (ABCO)
Title VI, Ch. 6, Sec. 1	Systems Access Manual, Travel and Transportation, Travel Online Data Entry
Title VI, Ch. 6, Sec. 2	Systems Access Manual, travel and Transportation, Travel System Data Entry Procedures for Personal Computer (PC–TRVL)
Title VI, Ch. 6, Sec. 3	Systems Access manual, Travel and Transportation, Travel System Online Inquiry

National Finance Center Procedures *(cont'd)*

Title VI, Ch. 7, Sec. 1	Systems Access Manual, Procurement and Other Payments, Purchase Order Online Data Entry and Inquiry (PRCHENT)
Title VI, Ch. 7, Sec. 3	Systems Access Manual, Procurement and Other Payments, Purchase Order Online Inquiry System (PRCHINQ)(for RD)
Title VI, Ch. 7, Sec. 9	Systems Access Manual, Procurement and Other Payments, Personal Computer FEDSTRIP System (PC–FEDS)
Title VI, Ch. 7, Sec. 10	Systems Access Manual, Procurement and Other Payments, FEDSTRIP Online Inquiry System
Title VI, Ch. 7, Sec. 14	Systems Access Manual, Procurement and Other Payments, Purchase Card Management System (PCMS)
Title VI, Ch. 8, Sec. 5	Systems Access Manual, Budget and Operating Plans Subsystem (PLAN)

Feeder System Input Forms

Department of Agriculture (AD)

AD–202	Travel Authorization/Advance
AD–202M	Travel Authorization/Advance, Attachment for Multiple Travelers
AD–202R	Travel Authorization/Advance, Attachment for Relocation Travel
AD–202RE	Travel Authorization/Advance, Attachment for Election of Separate Relocation Allowances
AD–287	Employee Suggestion
AD–287–2	Recommendation and Approval of Awards
AD–343	Payroll Action Request
AD–474	Transmittal – Telephone and Utilities
AD–581	Lump–Sum Leave or Compensatory Time Payments
AD–616	Travel Voucher (Temporary Duty Travel)
AD–616R	Travel Voucher (Relocation)
AD–633	Multi-use Standard Requisitioning/Issue Document
AD–643	Transmittal GSA Motor Pool
AD–644	Transportation Services Distribution – GSA Motor Pool
AD–672	Reimbursement or Advance of Funds Agreement
AD–673	Request to Bill
AD–700	Procurement Request
AD–704	Allotment Advise
AD–838	Purchase Order
AD–838A	Purchase Order, Partial Receipt Notification
AD–838B	Purchase Order, Invoice Receipt Certification
AD–838D	Purchase Order, Blanket Purchase Order (BPA) – Invoice – Receipt Certification
AD–955	GSA Telephone Transmittal

Department of Treasury – Financial Management service (FMS)

FMS–195	Judgement Fund payment Request (Admin. Award)
FMS–196	Judgement Fund Award Data Sheet
FMS–197	Voucher for Payment Where a Settlement Agreement Has *Not* Been Executed and Attached or Where a Final Judgement is *Not* Attached

Farm Service Agency (FSA)

FSA–875	Reimbursable Agreement

General Services Administration (GSA)

GSA–50	Requisition for Reproduction Services
GSA–2957	Reimbursable Work Authorization
GSA–2972	Agency Request for Adjustment/SIBAC Charge-Backs to FBF SLUC Billings

Government Printing Office (GPO)

GPO–2511	Print Order

National Finance Center (NFC)

NFC–631	Bill for Collection

Rural Development (Or Predecessor Agencies)

RECD 300–70	Request for Photocopying Service

Standard Forms (SFs)

SF–1	Printing and Binding Requisition to the Public Printer
SF–85	Data for Nonsensitive or Noncritical-sensitive Positions
SF–85P	Questionnaire for PUblic Trust Positions
SF–86	Questionnaire for National Security Positions
SF–132	Apportionment and Reapportionment Schedule
SF–182	Request, Authorization, Agreement and Certification of Training
SF–238	SIBAC Adjustment Voucher for Charge-Backs
SF–1080	Voucher for Transfers Between Appropriations and/or Funds\
SF–1081	Voucher and Schedule of Withdrawals and Credits
SF–1103	U.S. Government Bill of Lading (GBL)
SF–1109	U.S. Government Bill of Lading Continuation Sheet
SF–1151	Nonexpenditure Transfer Authorization
SF–1164	Claim for Reimbursement for Expenditures on Official Business
SF–1169	U.S. Government Transportation Request
SF–1200	Government Bill of Lading Correction Notice
SF–1203	U.S. Government Bill of Lading – Privately Owned Personal Property (PPGBL)

USDA Service Center Agencies (SCA)

SCA–4130	Employee Recognition Nomination and Approval

N:4

OPAC Agency Requirements

USDA Rural Development (ALC 12-40-0700) requires the following as a minimum:

1. All bills must include the agency name or number for whom the service is being provided.

2. The billing agency must obtain the minimum accounting data from the customer prior to billing through OPAC. This information must be provided in the description of the OPAC bill.

3. Charges under purchase orders (PO) must be billed on a separate OPAC bill from other types of charges (i.e., miscellaneous payments). The **PO number must be given**, (i.e., type 40 POs) along with the related amounts for each PO.

4. If the charge is in a form other than a PO (i.e., miscellaneous payment charge), the following minimum accounting data must be given:

    - Specific accounting code to be charged
    - Object class
    - Agreement number or account number or BOAC, etc.

5. All backup documentation must indicate the OPAC bill document reference number and accounting data or purchase order number.

6. For OPM, GSA, and Treasury training charges, a copy of the SF-182 must be mailed to NFC as backup documentation.

7. All backup documentation should be clearly labeled ***OPAC Data*** and mailed to the USDA, National Finance Center, P.O. Box 60963, New Orleans, LA 70160-0963. To avoid a chargeback, backup documentation must be received at NFC within 5 work days of the date of the OPAC bill. Additionally, a copy of all backup documentation, clearly labeled ***OPAC Data***, should be mailed to the USDA, Rural Development office being billed.

8. If a credit is issued to correct a prior billing, the OPAC bill document reference number and bill date of the prior billing must be indicated in the description field. If there is a PO number, it should also be given.

9. Failure to comply with the above requirements will result in a chargeback of the OPAC bill.

USDA Animal And Plant Health Inspection Service (ALC 12-40-3400) requires the following as a minimum:

1. All bills must include the agency name or number for whom the service is being provided.

2. The billing agency must obtain the minimum accounting data from the customer prior to billing through OPAC. This information must be provided in the description of the OPAC bill.

3. Charges under purchase orders (PO) must be billed on a separate OPAC bill from other types of charges (i.e., miscellaneous payments). The **PO number must be given**, (i.e., type 40 POs) along with the related amounts for each PO.

4. If the charge is in a form other than a PO (i.e., miscellaneous payment charge), the following minimum accounting data must be given:

    - Specific accounting code to be charged
    - Agreement or Order number. This is applicable to interagency agreements, GSA Reimbursable Work Authorizations (RWA's), SF-182, or Requisition number for GPO orders.

5. All backup documentation must indicate the OPAC bill document reference number and accounting data or purchase order number.

6. For OPM, GSA, and Treasury training charges, a copy of the SF-182 must be mailed to NFC as backup documentation.

7. All backup documentation should be clearly labeled ***OPAC Data*** and mailed to the USDA, National Finance Center, P.O. Box 60963, New Orleans, LA 70160-0963. To avoid a chargeback, backup documentation must be received at NFC within 5 work days of the date of the bill.

8. If a credit is issued to correct a prior billing, the OPAC bill document reference number and bill date of the prior billing must be indicated in the description field. If there is a PO number, it should also be given.

9. Failure to comply with the above requirements will result in a chargeback of the OPAC bill.

USDA Natural Resources Conservation Service (ALC 12-40-1600) requires the following as a minimum:

1. All bills must include the agency name or number for whom the service is being provided.

2. The billing agency must obtain the minimum accounting data from the customer prior to billing through OPAC. This information must be provided in the description of the OPAC bill.

3. Charges under purchase orders (PO) must be billed on a separate OPAC bill from other types of charges (i.e., miscellaneous payments). The **PO number must be given**, (i.e., type 40 POs) along with the related amounts for each PO.

4. If the charge is in a form other than a PO (i.e., miscellaneous payment charge), the following minimum accounting data must be given:

    - Budget FY
    - Fund code
    - Reporting category to include ACC data elements
    - Division

5. All backup documentation must indicate the OPAC bill document reference number and accounting data or purchase order number.

6. For OPM, GSA, and Treasury training charges, a copy of the SF-182 must be mailed to NFC as backup documentation.

7. All backup documentation should be clearly labeled ***OPAC Data*** and mailed to the USDA, National Finance Center, P.O. Box 60963, New Orleans, LA 70160-0963. To avoid a chargeback, backup documentation must be received at NFC within 5 work days of the date of the OPAC bill.

8. If a credit is issued to correct a prior billing, the OPAC bill document reference number and bill date of the prior billing must be indicated in the description field. If there is a PO number, it should also be given.

9. Failure to comply with the above requirements will result in a chargeback of the OPAC bill.

USDA Farm Service Agency (ALC 12-06-0000) requires the following as a minimum:

1. All bills must include the agency name or number for whom the service is being provided.

2. The billing agency must obtain the minimum accounting data from the customer prior to billing through OPAC. This information must be provided in the description of the OPAC bill.

3. Charges under purchase orders (PO) must be billed on a separate OPAC bill from other types of charges (i.e., miscellaneous payments). The **PO number must be given**, (i.e., type 40 POs) along with the related amounts for each PO.

4. If the charge is in a form other than a PO (i.e., miscellaneous payment charge), the following minimum accounting data must be given:

    - Specific accounting code to be charged
    - Fund code
    - 11-digit reference number

5. All backup documentation must indicate the OPAC bill document reference number and accounting data or purchase order number.

6. For OPM, GSA, and Treasury training charges, a copy of the SF-182 must be mailed to NFC as backup documentation.

7. All backup documentation should be clearly labeled ***OPAC Data*** and mailed to the USDA, National Finance Center, P.O. Box 60963, New Orleans, LA 70160-0963. To avoid a chargeback, backup documentation must be received at NFC within 5 work days of the date of the OPAC bill.

8. If a credit is issued to correct a prior billing, the OPAC bill document reference number and bill date of the prior billing must be indicated in the description field. If there is a PO number, it should also be given.

9. Failure to comply with the above requirements will result in a chargeback of the OPAC bill.

USDA Office of the Chief Financial Officer (ALC 12-40-0002) (Appropriated Funds Only) requires the following as a minimum:

1. All bills must include the agency name or number for whom the service is being provided.

2. The billing agency must obtain the minimum accounting data from the customer prior to billing through OPAC. This information must be provided in the description of the OPAC bill.

3. Charges under purchase orders (PO) must be billed on a separate OPAC bill from other types of charges (i.e., miscellaneous payments). The **PO number must be given**, (i.e., type 40 POs) along with the related amounts for each PO.

4. If the charge is in a form other than a PO (i.e., miscellaneous payment charge), the following minimum accounting data must be given:

- Specific accounting code to be charged
- Fund code

5. All backup documentation must indicate the OPAC bill document reference number and accounting data or purchase order number.

6. For OPM, GSA, and Treasury training charges, a copy of the SF-182 must be mailed to NFC as backup documentation.

7. All backup documentation should be clearly labeled ***OPAC Data*** and mailed to the USDA, National Finance Center, P.O. Box 60963, New Orleans, LA 70160-0963. To avoid a chargeback, backup documentation must be received at NFC within 5 work days of the date of the OPAC bill.

8. If a credit is issued to correct a prior billing, the OPAC bill document reference number and bill date of the prior billing must be indicated in the description field. If there is a PO number, it should also be given.

9. Failure to comply with the above requirements will result in a chargeback of the OPAC bill.

USDA Forest Service (ALC 12-40-1100) requires the following as a minimum:

1. All bills must include the agency name or number for whom the service is being provided.

2. The billing agency must obtain the minimum accounting data from the customer prior to billing through OPAC. This information must be provided in the description of the OPAC bill.

3. Charges under purchase orders (PO) must be billed on a separate OPAC bill from other types of charges (i.e., miscellaneous payments). The **PO number must be given**, (i.e., type 40 POs) along with the related amounts for each PO.

4. If the charge is in a form other than a PO (i.e., miscellaneous payment charge), the following minimum accounting data must be given:

    - Job code
    - Region code
    - Unit code (TP–02 or 04–02)
    - Obligating document

5. All backup documentation must indicate the OPAC bill document reference number and accounting data or purchase order number.

6. All backup documentation should be clearly labeled ***OPAC Data*** and mailed to the USDA, National Finance Center, P.O. Box 60963, New Orleans, LA 70160-0963. To avoid a chargeback, backup documentation must be received at NFC within 5 work days of the date of the OPAC bill.

7. If a credit is issued to correct a prior billing, the OPAC bill document reference number and bill date of the prior billing must be indicated in the description field. If there is a PO number, it should also be given.

8. Failure to comply with the above requirements will result in a chargeback of the OPAC bill.

USDA National Finance Center (ALC 12-40-0001) requires the following as a minimum:

1. All bills must include the agency name or number for whom the service is being provided.

2. The billing agency must obtain the minimum accounting data from the customer prior to billing through OPAC. This information must be provided in the description of the OPAC bill.

3. Charges under purchase orders (PO) must be billed on a separate OPAC bill from other types of charges (i.e., miscellaneous payments). The **PO number must be given**, (i.e., type 40 POs) along with the related amounts for each PO.

4. If the charge is in a form other than a PO (i.e., miscellaneous payment charge), the following minimum accounting data must be given:

    - Specific accounting code to be charged
    - Agency to be charged
    - Fund code

5. All backup documentation must indicate the OPAC bill document reference number and accounting data or purchase order number.

6. For OPM, GSA, and Treasury training charges, a copy of the SF-182 must be mailed to NFC as backup documentation.

7. All backup documentation should be clearly labeled ***OPAC Data*** and mailed to the USDA, National Finance Center, P.O. Box 60963, New Orleans, LA 70160-0963. To avoid a chargeback, backup documentation must be received at NFC within 5 work days of the date of the OPAC bill.

8. If a credit is issued to correct a prior billing, the OPAC bill document reference number and bill date of the prior billing must be indicated in the description field. If there is a PO number, it should also be given.

9. Failure to comply with the above requirements will result in a chargeback of the OPAC bill.

USDA Risk Management Agency (ALC 12-40-0800) requires the following as a minimum:

1. All bills must include the agency name or number for whom the service is being provided.

2. The billing agency must obtain the minimum accounting data from the customer prior to billing through OPAC. This information must be provided in the description of the OPAC bill.

3. Charges under purchase orders (PO) must be billed on a separate OPAC bill from other types of charges (i.e., miscellaneous payments). The **PO number must be given**, (i.e., type 40 POs) along with the related amounts for each PO.

4. If the charge is in a form other than a PO (i.e., miscellaneous payment charge), the following minimum accounting data must be given:

    - Specific accounting code to be charged
    - Fund code

5. All backup documentation must indicate the OPAC bill document reference number and accounting data or purchase order number.

6. All backup documentation should be clearly labeled ***OPAC Data*** and mailed to the USDA, National Finance Center, P.O. Box 60963, New Orleans, LA 70160-0963. To avoid a chargeback, backup documentation must be received at NFC within 5 work days of the date of the OPAC bill.

7. If a credit is issued to correct a prior billing, the OPAC bill document reference number and bill date of the prior billing must be indicated in the description field. If there is a PO number, it should also be given.

8. Failure to comply with the above requirements will result in a chargeback of the OPAC bill.

USDA Food Safety Inspection Service (ALC 12-37-0001) requires the following as a minimum:

1. All bills must include the agency name or number for whom the service is being provided.

2. The billing agency must obtain the minimum accounting data from the customer prior to billing through OPAC. This information must be provided in the description of the OPAC bill.

3. Charges under purchase orders (PO) must be billed on a separate OPAC bill from other types of charges (i.e., miscellaneous payments). The **PO number must be given**, (i.e., type 40 POs) along with the related amounts for each PO.

4. If the charge is in a form other than a PO (i.e., miscellaneous payment charge), the following minimum accounting data must be given:

    - Specific accounting code to be charged
    - Fund code

5. All backup documentation must indicate the OPAC bill document reference number and accounting data or purchase order number.

6. For OPM, GSA, and Treasury training charges, a copy of the SF-182 must be mailed to NFC as backup documentation.

7. All backup documentation should be clearly labeled ***OPAC Data*** and mailed to the USDA, National Finance Center, P.O. Box 60963, New Orleans, LA 70160-0963. To avoid a chargeback, backup documentation must be received at NFC within 5 work days of the date of the OPAC bill.

8. If a credit is issued to correct a prior billing, the OPAC bill document reference number and bill date of the prior billing must be indicated in the description field. If there is a PO number, it should also be given.

9. Failure to comply with the above requirements will result in a chargeback of the OPAC bill.

O:10

PART 10.

CUSTOMER ASSISTANCE

Customer Assistance Overview **10:3**
Remedy 10:3
Knowledge Base 10:4
Submit A Support Ticket For Assistance or Request Information 10:4

Customer Assistance Overview

Customer Assistance provides instructions on acquiring assistance on FFIS processing functions.

Remedy

In support of the Foundation Financial Information System (FFIS), the FFIS Project Office has created a customer assistance method called Remedy. Remedy, available at the Web site *ffis–remedy.hqnet.usda.gov*, exists for the purpose of providing support to FFIS users. By accessing *ffis–remedy.hqnet.usda.gov*, you will be able to request information, submit requests for support regarding FFIS or the Financial Data Warehouse (FDW). The information you will need to provide to Submit A Support Ticket For Assistance or Request Information is: your name, agency, telephone number, e-mail address, a categorization of the severity of the problem, a summary of the problems, important details about the problem, and the problems general support topic.

When you access *ffis–remedy.hqnet.usda.gov*, the USDA FFIS Help is here! message screen (**Figure 10:1**) is displayed.

Read the message then select the Click To Continue link. The Welcome to the Customer Service Center screen (**Figure 10:2**) is displayed .

Figure 10:1. USDA FFIS Help is Here! screen

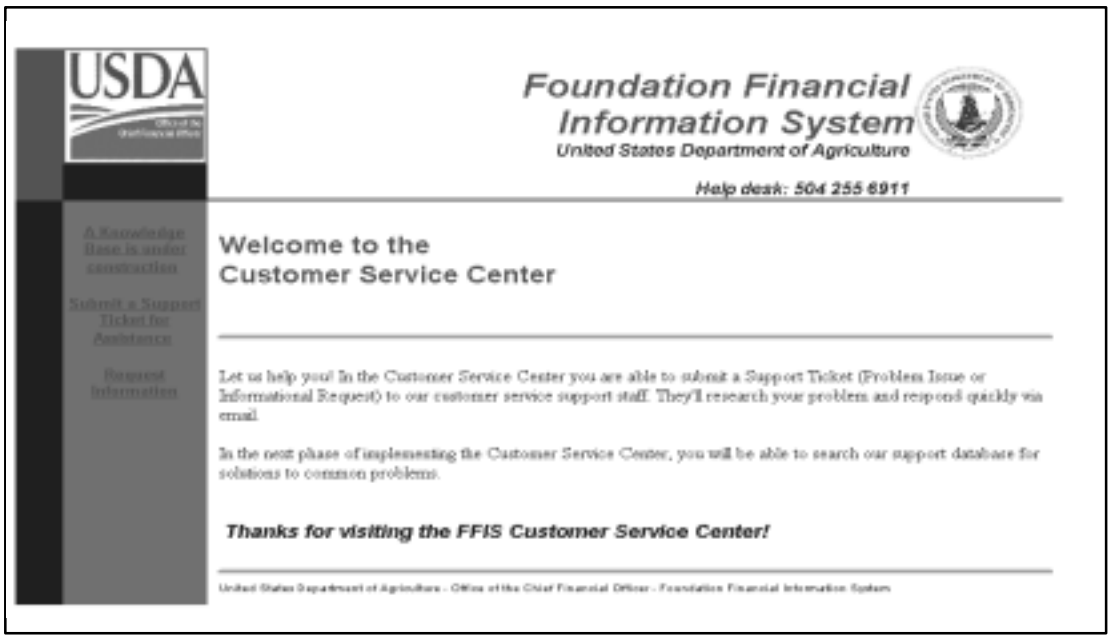

Figure 10:2. Welcome to the Customer Service Center screen

At the Welcome screen (**Figure 10:2**), you can select the following options:

- Knowledge Base
- Submit a Support Ticket for Assistance
- Request Information

Knowledge Base

Presently the Knowledge Base is under construction. It will provides answers to frequently asked questions as well as information about using the Error Guide Inquiry Table (ERRG), Retrieving Documents from SUSF, and Common Errors.

Submit A Support Ticket For Assistance or Request Information

To make a help or informational request, select either Submit a Support Ticket for Assistance or Request Information. Either option will bring you to the Submit a Customer Service Ticket screen (**Figure 10:3**).

At this screen, you are required to enter information for the fields displayed in bold:

1 **First Name**. Key in your first name.

2 **Last Name**. Key in your last name.

3 **Agency**. Select your agency from the agency drop-down menu (**Figure 10:4**).

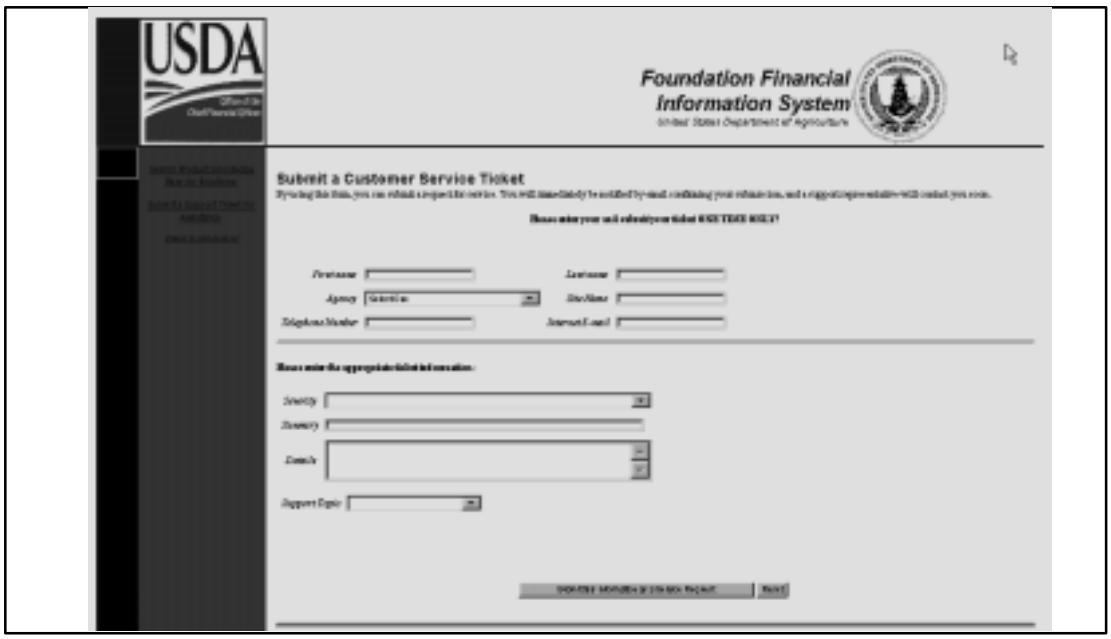

Figure 10:3. Submit a Customer Service Ticket

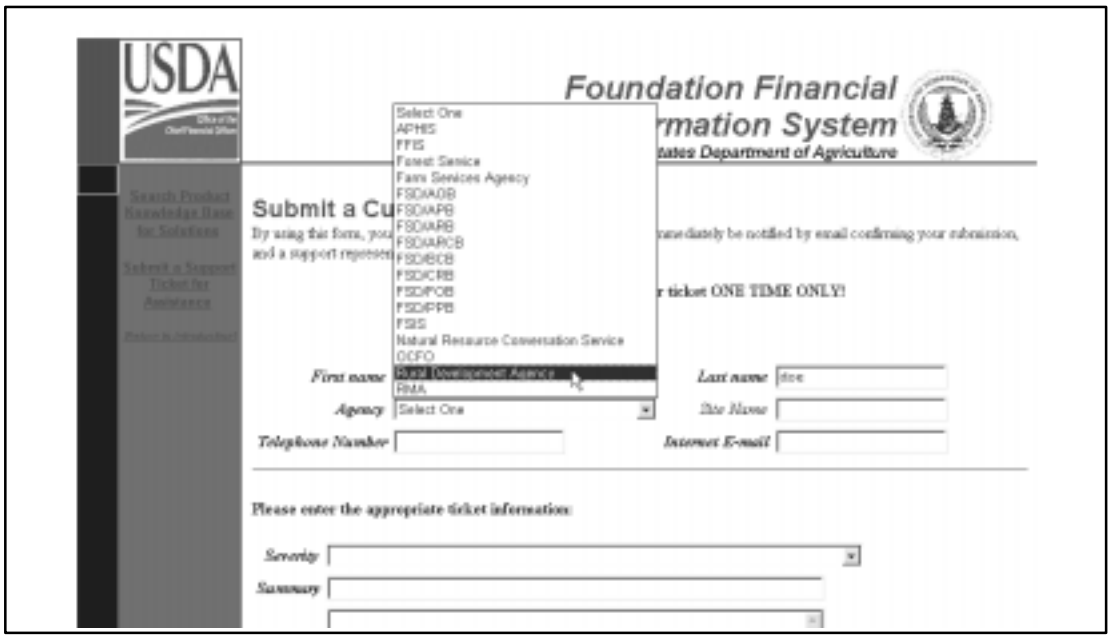

Figure 10:4. Agency drop-down menu

[4] **Telephone Number**. Key in your telephone number.

[5] **Internet E-mail**. Key in your e-mail address. Note: It is **extremely important** that accurate internet e-mail addresses are used.

[6] **Severity**. Select a ranking for the severity of the problem on a scale of 1–4 from the drop-down menu (**Figure 10:5**). Ranking are as follows:

1 = Critical: unable to conduct business

2 = High: ability to conduct business is seriously impeded

3 = Medium: important issues that do not currently impact ability to conduct business

4 = Low: informational requests

[7] **Summary**. Key in a brief summary of your request.

[8] **Details**. Key in important details about your request.

[9] **Support Topic**. Select the support topic from the drop-down menu (**Figure 10:6**).

Figure 10:5. Severity drop-down menu

Figure 10:6. Support topic drop-down menu

When you have completed all the fields in bold, select the Submit This information as a Service Request link. The File Submitted, Entry ID screen (**Figure 10:7**) is displayed with your tickets identification number shown.

Select the Entry ID number and the Service Request ID detail screen (**Figure 10:8**) is displayed. This screen includes the entry (ticket) id number and recaps the information submitted in your request.

Make a note of your ticket ID number for future reference. Once the request is received by Remedy, you will receive a confirmation e-mail message (**Figure 10:9**). You can reply to this e-mail to submit additional information regarding your request to the Remedy staff.

If you need to open another support ticket, return to *ffis–remedy.hqnet.usda.gov* and repeat the above process.

Figure 10:7. File Submitted, Entry ID screen

Figure 10:8. Service Request ID detail screen

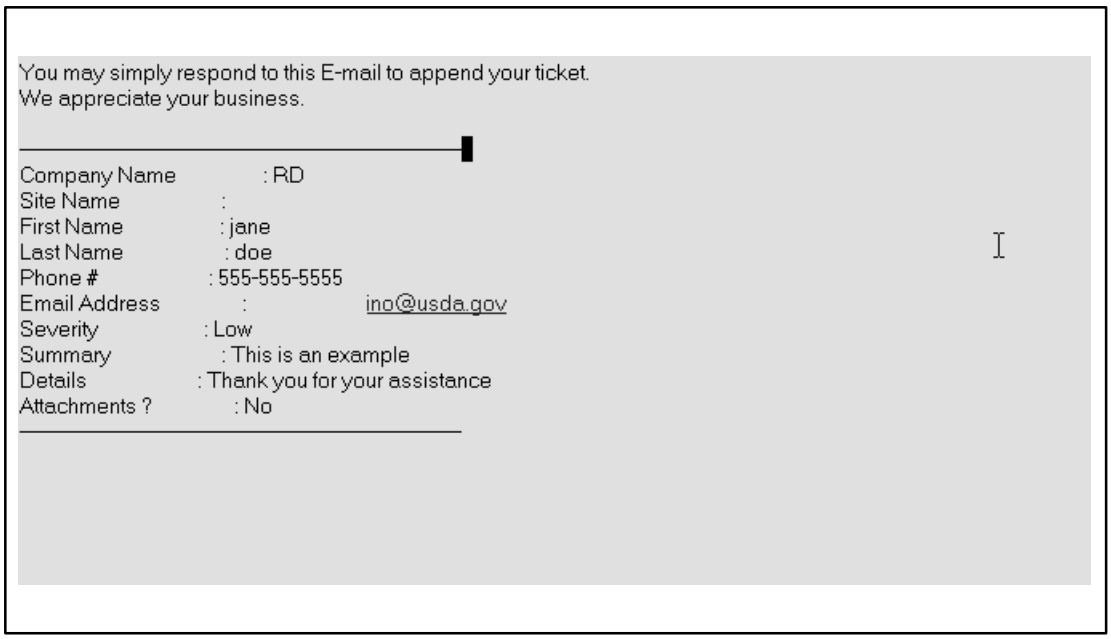

Figure 10:9. Confirmation E-mail message example

PART 11.

QUICK REFERENCE GUIDES

System Operations (SOP) SOP:1
Appropriation And Apportionment Document (AA) AA:1
Budget Execution Document (Allocation) (BE) BE:1
Budget Execution Document (Allotment) (BL) BL:1
Standard Voucher Clone Document (CM) CM:1
Direct Disbursement Document (DD) DD:1
Journal Voucher Document (JV) JV:1
Miscellaneous Order Document (MO) MO:1
Apportionment Approval Document (PA) PA:1
Payment Voucher Document (PV) PV:1
Requisition Document (RQ) RQ:1
Suballotment Document (SA) SA:1
Standard Voucher Document (SV) SV:1
Training Order Document (TG) TG:1

Overview

The quick reference guides provide abbreviated instructions for accessing FFIS and using RD documents. The guides may be separated from the rest of the procedure for easy reference. For detailed information on system access or a specific document, refer to the other parts of the procedure.

The guides are organized alphabetically by document transaction code. Within each guide, pages are numbered consecutively at the bottom (e.g., AA:1, AA:2, etc.).

System Operations (SOP)

This Quick Reference Guide provides useful information on the following:

- Table Action Codes
- Document Commands
- Batch Document Commands
- Status Codes
- Navigating In Documents
- Interpreting FFIS Error Codes
- Error Message Research Instructions
- Keyboard Functions

Table Action Codes

Code	Description
N	**Next.** Used to leaf to another table or to blank out the fields of the current table.
S	**Scan.** Used to access a record in a table when only a portion of the table key is known. The system displays the first matching record for the key fields entered. ***S*** automatically appears in the Action field after an N action is performed.
R	**Refill.** Used to refill the table with the next sequential record(s). ***R*** action automatically appears in the Action field after an S action is performed.
>	**Navigate Forward.** Used to move forward in a series of up to five screens saved by the system, counting the first screen.
<	**Navigate Backward.** Used to move backward in a series of up to five screens saved by the system, counting the first screen.
G	**Get.** Used to get a specific record when all the table key fields are entered. The navigate forward and backward actions cannot be used after *getting* a record.
L	**Leaf.** Used to leaf from a record on one table to the same record on another table. Also, use L to leaf from tables to documents.
B*	**Back.** Used to leaf backward to the previous table.
F*	**Forward.** Used to leaf forward to the next table.
A	**Add.** Used to add records in data entry or reference tables.
Z	**Zoom.** Used to move from table to table without losing the original record from the first table accessed.
C	**Change.** Used to change records in data entry or reference tables.
D	**Delete.** Used to delete records in data entry or reference tables.
E	**Exit.** Used to exit a table.
* *These codes may be used only after the Leaf command has been performed.*	

Document Commands

Command	Description
A	**Approve Doc.** The user's approval authority is applied to the current document.
B	**Bottom Doc**. The last screen of the document is displayed.
D	**Delete Doc.** The status of the current document is changed to *Deleted*. The user can delete any integrated document any time prior to processing through PASS2. The document is scheduled for deletion and removed from the Document Suspense File during the overnight processing and archived.
DL	**Delete Line.** The detail line (*where the cursor is located*) is removed from the document.
E	**Edit Doc.** An edit is performed on the current document. If no errors are detected, FFIS displays a message indicating a successful edit. If errors are detected, the display is repositioned to the screen containing the first error detected within the batch.
END/F	**End.** The system exits the documents and returns to tables. If you entered the document from the Document Suspense File, FFIS would return to the Document Suspense File. If the user entered the document through a direct leaf, the FFIS would return to the screen where the leaf was entered. If you did not save the latest changes to the document, FFIS prompts you to either save or discard those changes before allowing you to execute *End* function.
G	**Get.** The first screen of the requested document is displayed. The Document ID key must be entered in the Document ID field on the screen. FFIS allows either correction to the document or placement of the document in the Scan mode, depending on the status of the document.
H	**Hold Document.** The status of the current document is changed to *Held*.
I	**New Line.** A new line is created within an existing document. The user places the cursor on the detail line where the new detail line should follow. If the cursor is not on a specific detail line, the new line is inserted before the first detail line on the screen.
N	**Next.** The next screen is displayed.
NEW	**New.** A blank screen is displayed to begin entering data for a new document.
O	**Override Doc.** The user's error override authority is applied to the current document.
P [Table]	**Pause.** You are allowed to temporarily pause out of a document to a table.
R	**Run Doc or Run Doc** (*Process while you wait*). The current document is submitted for PASS2 processing. If no errors are detected, FFIS returns you to the top of the document with a message indicating a successful run. If errors are detected, FFIS displays the screen containing the first error detected within the document.
RE	**Run Doc and End.** The current document is submitted for PASS2 processing. If no errors are detected, FFIS returns you to the top of the document with a message indicating a successful run. If errors are detected, FFIS displays the screen containing the first error detected within the document.
SA	**Show Approvals.** FFIS determines the approvals that are pending on the batch or document and produces error messages indicating the current approval status of the document.

Document Commands *(cont'd)*

Command	Description
UNA	**Unapprove Doc.** The user's approval authority is removed from the current document.
UND	**Undelete Doc.** The status of the current document is changed from *Delete* to *Held*.
X	**Discard.** The document work area is cleared. All work since the last time the Document Suspense File was updated is lost. If no function has been entered that caused the document to be written to the Document Suspense File, this command effectively cancels the document entry from the Document Suspense File. If the document has been previously saved on the Document Suspense File, it still exists there and the user must access it again and use the Delete command to remove it from Document Suspense File. Use discard in the correction mode to erase any changes made since retrieving the document and prior to processing the document. Only the information entered since retrieving or processing the document is discarded.

Batch Document Commands

Command	Description
AB	**Approve Bat.** The user's approval authority is applied to the current batch.
BB	**Bottom Bat.** The last screen in the batch of documents is displayed.
DB	**Delete Bat.** The detail line (*where the cursor is located*) is removed from the document.
EB	**Edit Batch.** An edit is performed on the current batch. If no errors are detected, FFIS displays a message indicating a successful edit. If errors are detected, messages are displayed at the bottom of the screen.
HB	**Hold Batch.** Used to change the status of the current batch to held.
RB	**Run Batch.** The current batch is submitted for PASS2 processing. If no errors are detected, FFIS displays the top of the batch with a message indicating a successful run. If errors are detected, FFIS displays the screen containing the first error detected within the batch.
TB	**Top Bat.** FFIS displays the document header.
UAB	**Unapprove Bat.** The user's approval authority is removed from the current document.
UNB	**Undelete Bat.** The status of the current batch is changed from *Delete* to *Held*.

Status Codes

Status	Description
ACCPT	**Accepted.** The document has been processed through PASS2. All updates have been completed.
BHELD	**Batch Held.** This status appears only on documents within a batch. The document batch is held.
BRJCT	**Batch Rejected.** This status appears only on documents within a batch. The batch document will not be processed until all errors are corrected.
BSCHD	Batch Scheduled. This status appears only on documents within a batch. Processing occurs overnight.
DELET	**Delete.** The batch or document has been marked for deletion and will be removed from SUSF during overnight processing.
HELD	**Held.** The batch or document has been put on hold by the user.

Status Codes *(cont'd)*

Status	Description
PEND1*	**Pending 1.** Pending level 1 approval.
REJCT	**Rejected.** The batch or document was previously processed and rejected due to errors.
SCHED	**Scheduled.** The batch or document is scheduled for offline update processing. Processing occurred overnight.
* *The document was processed but rejected because the level of approval had not been applied.*	

Navagating In Documents

Process	Description
Pausing	FFIS provides the capability to temporarily pause out of a document to a table. The *Pause* command may be used at any point during document processing. To *Pause* from a document to a table, perform the following steps:
Step 1	Press [Home] to place the cursor in the Command field.
Step 2	Enter ***P*** for pause. Press [Space Bar] once and enter the 4-character tableID in the Command field.
Step 3	Press [Enter]. The specified table is displayed.
Step 4	To return to the document, key in ***E*** (*to exit from the table*) in the tableID field.
Step 5	Press [Enter]. This ends the *Pause* session and returns you to the document initially displayed prior to executing the *Pause* command.
Exiting a document	To exit FFIS from a document, key in ***end*** in the Command field. Press [Enter]. The FFS screen is displayed. Key in ***E*** in the Action field and press [Enter]. The AMS screen is displayed. Key in ***X*** in the Command field and press [Enter]. A blank screen is displayed. Key in ***bye***. Press [Enter].
*You may perform as many table look-ups as needed using the **P** command.*	

Interpreting FFIS Error Codes

All FFIS error messages are preceded by a 7 or 8-digit code. Each code identifies where the error may be found and what type of error was found. The following illustrations provide the keys to interpreting an FFIS error code.

1st Char.	Error Location	Example
A	General Application/System Message	**A**–CQ93
H	Document Header Error	**H**–CV9AE-INVALID DOCU...
B	Batch Header Error	**B** –CD02E-INVALID CURR...
#	Line Number Error	**01**–SC03W-INSUFFICIENT...

Last Char.	Error Type	Example
#	General	Reports the status of the document. No action required by the user. **Example:** (A--CQ9**3**)
W	Warning	FFIS will process the document. **Example:** (01-SC03**W**)
O	Overrideable	Authorized user must override for processing to succeed. **Example:** (01-SC03**O**)
E	Fatal	Error must be corrected in order to process. **Example:** (01-CE21**E**)

Error Message Research Instructions

- Use the down arrow key to move to the error message and press [Enter]. The ERRG is displayed.
- Read the error explanation and follow any instructions provided.
- To return to the document, key in ***E*** in the Action field at any table screen.

☞**Note:** To override an error message, key in ***O*** in the Command field and press [Enter].☜

Keyboard Functions

The following is a list of keys commonly used to navigate within FFIS. For instructions on your equipment usage, see the manufacturer's operating guide.

Used to move the cursor to the Action field for tables; the Command field for documents.

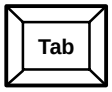

Used to move the cursor to the next field.

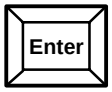

Used to execute an action.

Used to erase data in a field. When placed in the beginning of a field, this keystroke erases the entire field. If the cursor is positioned in any other place in the field, the data to the right of the cursor is erased.

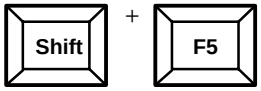

Used to erase the contents of the screen.

Note: Use this key only when instructed by the system.

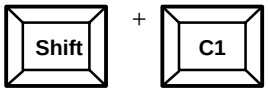

Used to move the cursor back one field.

Appropriation And Apportionment Document (AA)

The AA (see Figure) **is used at the National Office, Budget Division to:**

- Enter all appropriations.
- Enter pending apportionments.

The AA updates the following tables:

- Apportionment Inquiry Table (APOR)
- Appropriation Inquiry Table (APPR)
- Fiscal Year Appropriation Inquiry Table (FAPP)
- Fiscal Year Apportionment Inquiry Table (FAPR)
- General Ledger Balance Inquiry Table (GLBL)

```
COMMND: NEW [1]          DOCID: AA [2]                    XX/XX/XX 08:22:41
STATUS: [3]              BATID: [4]              SEC2: [5]
                   APPROPRIATION AND APPORTIONMENT DOCUMENT
TRANS DATE: [6]          ACCTG PD: [7]
ACTION: [8]     BUDGET FYS: [9]      FUND: [10]      TOT APPOR AMT: [11]
                                                    TOT APPOR FTES: [12]
               TR TYPE  REVISED AMOUNT  INC/DEC AMOUNT
               -------- ---------------- ----------------
      APPROP:    [13]         [14]          [15]              IND: [16]
 EST REIMBUR:    [17]         [18]          [19]           OPTION: [20]
 EST RECOVER:    [21]         [22]          [23]
    STAT RES:    [24]         [25]          [26]          PUB LAW: [27]
   APPR FTES:    [28]         [29]          [30]
 APPORTIONMENT PD 1-4 TRANS TYPE: [31]   APPORTIONMENT DEFERRED TRANS TYPE: [32]
APPOR PERIOD  PENDING APPOR AMT  APPOR INC/DEC AMT   APPOR FTES    FTE INC/DEC
------------- ------------------  ------------------  ------------  ------------
     1             [33]                 [34]              [35]          [36]
     2
     3
     4
  DEFERRED
```

Figure. Appropriation And Apportionment Document (AA)

Command Fields

Complete the command fields as follows:

[1] **Commnd** *(no-entry)*

New is system generated. Press [Tab].

---

[2] **DocID** *(required, alphanumeric field; max. of 15 positions)*

The document identifier consists of 3 fields: At the system-generated transaction code (***AA***), press [Tab]. Key in the sec1 code (i.e., the 2 position division code) and press [Tab]. Key in the Org Code (5–positions). Press [#], then press [Enter]. Sequential numbers are generated in positions 10–15.

---

[3] **Status** *(no-entry)*

After the document is processed, this field displays the current status of a document.

---

[4] **BatID** (*no-entry)*

This field is not used for this document.

---

[5] **Sec2** *(no-entry)*

The system generates the security code that is inferred from your user ID to verify your authority to create this document. This data is not displayed.

Press [Enter] and the screen is ready for data entry.

Other Fields

Complete the other fields as follows:

6 **Trans Date** (*optional default, numeric field; 6 positions)*

Key in the date *(mmddyy)* of the document, usually the current date. It cannot be a future date. If left blank, the system defaults to the date the document is accepted by the system.

---

7 **Acctg Pd** (*optional default, numeric field; 4 positions)*

Key in the open accounting period date (*mmyy*). If left blank, the system defaults to the accounting period inferred from the document date in the CLDT, but it is not displayed.

---

8 **Action** *(required, alpha field; 1 position)*

Key in one of the following:

A = Adds a new appropriation or reactivates an inactive appropriation.
C = Changes the appropriation, the estimated receipts option, or the statutory reserve amount, or adds apportionments to an existing appropriation.
D = Deactivates an appropriation

---

9 **Budget FYs** (*required, numeric field; 2 positions)*

Key in the last 2 digits of the budget fiscal year. See the FSYR for valid fiscal years.

---

10 **Fund** (*required, alphanumeric field; max. of 3 positions)*

Key in the fund code. See the FUND for valid fund codes.

---

11 **Tot Appor Amt** (*no-entry)*

Leave blank.

---

12 **Tot Appor FTEs** (*no-entry*)

This field is not used by RD.

---

13 **Approp (Tr Type)** (*required, alphanumeric field; 2 positions)*

Key in the transaction type for the appropriation.

---

14 **Approp (Revised Amount)** (*no-entry*)

Leave blank.

---

15 **Approp (Inc/Dec Amount)** (*required, numeric field; max. of 15 positions)*

Key in the new amount (use decimal), if adding an appropriation. Key in the amount of the increase or decrease (use decimal), if changing an appropriation.

---

16 **Ind** (*optional, alpha field; 1 position)*

Key in one of the following or leave blank to indicate that the change to the appropriation is an adjustment.

L = Requested change to the appropriation amount is a lapse.
T = Requested change to the appropriation is a transfer.

Other Fields *(cont'd)*

17 **Est Reimbur (Tr Type)** (*optional, alpha field; 2 positions)*

Key in the transaction type ***RE*** for the estimated reimbursement.

---

18 **Est Reimbur (Revised Amount)** (*no-entry)*

Leave blank.

---

19 **Est Reimbur (Inc/Dec)** (*conditional, numeric field; max. of 15 positions)*

If adding an estimated reimbursement/collections, key in the new amount (use decimal). If changing an estimated reimbursement/collections, key in the amount of the increase or decrease (use decimal).

---

20 **Option:** *(optional default, alpha field; 1 position*)

Key in one of the following. If left blank, the system defaults to ***N***.

- ***N*** = Does not include reimbursements in limiting apportionment YTD budget authority.
- ***E*** = Includes estimated reimbursements.
- ***A*** = Includes actual reimbursements.
- ***L*** = Includes the lesser of actual receipts and estimated receipts.

---

21 **Est Recover (Tr Type)** (*optional, alphanumeric field; 2 positions)*

Key in the transaction type for the estimated recovery. See the ACED for valid transaction types.

---

22 **Est Recover (Revised Amount)** *(no-entry)*

Leave blank.

---

23 **Est Recover (Inc/Dec Amount)** (*optional, numeric field; max. of 15 positions*)

Key in the new amount (use decimal), if adding an estimated recovery. Key in the amount of the increase or decrease (use decimal), if changing an estimated recovery.

---

24 **Stat Res (Tr Type)** (*optional, alphanumeric field; 2 positions)*

Key in the transaction type for the statutory reserve. See the ACED for valid transaction types.

---

25 **Stat Res (Revised Amount)** *(no-entry)*

Leave blank.

---

26 **Stat Res (Inc/Dec Amount)** (*optional, numeric field; max. of 15 positions*)

Key in the new amount (use decimal), if adding a statutory reserve. Key in the amount of the increase or decrease (use decimal), if changing a statutory reserve.

---

27 **Pub Law** (*optional, alphanumeric field; max. of 12 positions*)

Key in the public law authorizing the appropriation.

---

28 **Appr FTEs (Tr Type)** (*no-entry)*

This field is not used by RD.

Other Fields *(cont'd)*

29 **Appr FTEs (Revised Amount)** (*no-entry*)
This field is not used by RD.

30 **Appr FTEs (Inc/Dec Amount)** (*no-entry)*
This field is not used by RD.

31 **Apportionment Pd 1–4 Trans Type** (*required, alpha field; 2 positions*)
Key in the transaction type ***PN*** for apportionment pending.

32 **Apportionment Deferred Trans Type** (*no-entry*)
This field is not used by RD.

33 **Pending Appor Amt (1,2,3,4 Deferred)** *(no-entry)*
Leave blank.

34 **Appor Inc/Dec Amt (1, 2, 3, 4 Deferred)** (*required, numeric field; max. of 15 positions*)
Key in the new amount (use decimal) in the first period, if adding an apportionment. Key in the amount (use decimal) of the increase or decrease, if changing an apportionment.

35 **Appor FTEs (1, 2, 3, 4 Deferred)** (*no-entry*)
This field is not used by RD.

36 **FTE Inc/Dec (1, 2, 3, 4 Deferred)** (*no-entry*)
This field is not used by RD.

Processing Instructions

After keying in the data, press [Home] to place the cursor in the Command field. Key in ***E*** (edit) in the Command field to edit the data entered. Press [Enter]. If errors are detected, follow the Error Message Research Instructions. If no errors are detected, key in ***R*** (run) in the Command field to process the data. Press [Enter]. The status of the document is displayed.

Error Message Research Instructions

- Use the down arrow key to move to the error message and press [Enter]. The ERRG is displayed.
- Read the error explanation and follow any instructions provided.
- To return to the document, key in ***E*** in the Action field at any table screen.

Note: To override an error message, key in ***O*** in the Command field and press [Enter]

Note: For more detailed information on the AA, see **Part 3**, **Budget And Funds Control**, in the manual.

Budget Execution Document (Allocation) (BE)

The BE (see Figure) **is used at the National Office, Budget Division to:**

- Allocate funds to the Division level.

The BE updates the following tables:

- Appropriation Inquiry Inquiry Table (APPR)
- Apportionment Inquiry Inquiry Table (APOR)
- Allocation Inquiry Inquiry Table (ALOC)
- Fiscal Year Allocation Inquiry Table (FALC)
- Fiscal Year Allotment Inquiry Table (FALT)
- Fiscal Year Appropriation Inquiry Table (FAPP)
- Fiscal Year Apportionment Inquiry Table (FAPR)
- General Ledger Balance Inquiry Table (GLBL)

```
COMMND: NEW [1]          DOCID: BE [2]                          XX/XX/XX 13:47:29
STATUS: [3]              BATID: [4]                SEC2: [5]        000-000 OF 000
H-
                          BUDGET EXECUTION DOCUMENT

    TRANS DATE: [6]        ACCTG PD: [7]     APPRV TR TYPE: [8] POSTED TR TYPE: [9]
    BUDGET FYS: [10]     FUND: [11]       HEADER ACTION IND: [12]  APPOR PERIOD: [13]
    TOTAL REVISED AMT: [14]                   BUDGET LEVEL: [15]
    A
    C                                 TRANS TYPE  P
    T DIV    ORG    PROGRAM  BOC  APPRV POST  D   YTD AMT          INC/DEC AMT
    _ ____ _______ _________ ____ _____ ____  _ ___________ ____________
01-[16] [17]  [18]    [19]    [20]  [21]  [22]  1   [23]          [24]
    SPENDING IND: [25]                          2
                                                3
         DESCRIPTION [26]                       4

       SUBALLOT OPTNS                                  REVISED
       ORG PGM BOC SPN                   TR TYPE       AMOUNT       INC/DEC AMT
       --- --- --- ---                   ------- ---------------- ---------------
            [27]              EST REIM:   [28]          [29]             [30]
```

Figure. Budget Execution Document (BE)

Command Fields

Complete the command fields as follows:

[1] **Commnd** *(no-entry)*

New is system generated. Press [Tab].

---

[2] **DocID** *(required, alphanumeric field; max. of 15 positions)*

The document identifier consists of 3 fields: At the system-generated transaction code (***BE***), press [Tab]. Key in the sec1 code (i.e., the 2 position division code) and press [Tab]. Key in the Org Code (5-positions). Press [#], then press [Enter]. Sequential numbers are generated in positions 10–15.

---

[3] **Status** *(no-entry)*

After the document is processed, this field displays the current status of a document.

---

[4] **BatID** (*no-entry)*

This field is not used for this document.

Command Fields *(cont'd)*

5 **Sec2** *(no-entry)*

The system generates the security code that is inferred from your user ID to verify the user's authority to create the document. This data is not displayed.

Press [Enter] and the screen is ready for data entry.

Header Fields

Complete the header fields as follows:

6 **Trans Date** *(optional default, numeric field; 6 positions)*

Key in the date (*mmddyy*) of the document, usually the current date, but never a future date. If left blank, the system defaults to the date the document is accepted by the system.

7 **Acctg Pd** *(optional default, numeric field; 4 positions)*

Key in the open accounting period date (*mmyy).* If left blank, the system defaults to the accounting period inferred from the document date in the CLDT, but it is not displayed.

8 **Apprv Tr Type** *(required, alpha field; 2 positions)*

Key in the approved transaction type ***AP*** for the dollar amount entered.

9 **Posted Tr Type** *(required, numeric field; 2 positions)*

Key in the posted transaction type ***01*** for the dollar amount entered.

10 **Budget FYs** *(optional default, numeric field; 2 positions)*

Key in the last 2 digits of the budget fiscal year. See the FSYR for valid fiscal years. If left blank, the system defaults to the budget fiscal years inferred from the transaction date.

11 **Fund** *(required, alphanumeric field; max. of 3 positions)*

Key in the fund code. See the FUND for valid fund codes.

12 **Header Action Ind** *(no-entry)*

Leave blank. If the header action indicator is not entered in this field, it must be entered in **Field 16**.

13 **Appor Period** *(required, numeric field; 1 position)*

Key in the apportionment period ***1***.

14 **Total Revised Amt** *(no-entry)*

Leave blank.

15 **Budget Level** *(required, alpha field; 2 positions)*

Key in ***AC*** for the allocation level.

Line Fields

Complete the line fields as follows:

16 **Act** *(conditional, alpha field; 1 position)*

If the action code is not entered in the Header Action Ind (**Field 12**), key in one of the following:

A = Adds a new budget authority or reactivates an inactive budget line.
C = Changes an existing authority.
D = Deactivates a budget line.

---

17 **Div** *(required, numeric field; 2 positions)*

Key in the division code. See the DVSN for valid division codes.

---

18 **Org** *(no-entry)*

This field is not used for the allocation level.

---

19 **Program** *(no-entry)*

Leave blank.

---

20 **BOC** *(no-entry)*

This field is not used for this document.

---

21 **Trans Type (Apprv)** *(no-entry)*

This field is system generated with data inferred from the header screen.

---

22 **Trans Type (Post)** *(no-entry)*

This field is system generated with data inferred from the header screen.

---

23 **YTD Amt (1, 2, 3, 4)** *(no-entry)*

Leave blank.

---

24 **Inc/Dec Amt (1, 2, 3, 4)** *(required, numeric field; max. of 15 positions)*

If adding, key in the new amount (use decimal) in the first period. If changing, key in the amount of the increase or decrease.

---

25 **Spending Ind** *(no-entry)*

Leave blank.

---

26 **Description** *(optional, alphanumeric field; max. of 30 positions)*

Key in a description.

---

27 **Suballot Optns (Org, Pgm, BOC, Spn)** *(no-entry)*

These fields are not used for the allocation level.

Line Fields *(cont'd)*

The following fields are relevant only to the funds which require estimated reimbursement or anticipated collections to finance authority.

28 **Est Reim Tr Type** *(no-entry)*
This field is not used by RD.

29 **Est Reim Revised Amount** *(no-entry)*
This field is not used by RD.

30 **Est Reim Inc/Dec Amt** *(no-entry)*
This field is not used by RD.

Processing Instructions

After keying in the data, press [Home] to place the cursor in the Command field. Key in ***E*** (edit) in the Command field to edit the data entered. Press [Enter]. If errors are detected, follow the Error Message Research Instructions. If no errors are detected, key in ***R*** (run) in the Command field to process the data. Press [Enter]. The status of the document is displayed.

Error Message Research Instructions

- Use the down arrow key to move to the error message and press [Enter]. The ERRG is displayed.
- Read the error explanation and follow any instructions provided.
- To return to the document, key in ***E*** in the Action field at any table screen.

Note: To override an error message, key in ***O*** in the Command field and press [Enter]

Note: For more detailed information on the BE, see **Part 3**, **Budget And Funds Control**, in the manual.

Budget Execution Document (Allotment) (BL)

The BL (see Figure) **is used by the Headquarters allottees and State Office budget staffs to:**

- Distribute funds to Organization Level 1 and by State Offices to budget object class (BOC) rollup code.

The BL updates the following tables:

- Appropriation Inquiry Inquiry Table (APPR)
- Apportionment Inquiry Inquiry Table (APOR)
- Allocation Inquiry Inquiry Table (ALOC)
- Allotment Inquiry Inquiry Table (ALLT)
- Fiscal Year Allocation Inquiry Table (FALC)
- Fiscal Year Allotment Inquiry Table (FALT)
- Fiscal Year Appropriation Inquiry Table (FAPP)
- Fiscal Year Apportionment Inquiry Table (FAPR)
- General Ledger Balance Inquiry Table (GLBL)

```
COMMND: NEW [1]          DOCID: BE [2]                          XX/XX/XX 13:47:29
STATUS: [3]              BATID: [4]              SEC2: [5]          000-000 OF 000
H-
                          BUDGET EXECUTION DOCUMENT

    TRANS DATE: [6]        ACCTG PD: [7]    APPRV TR TYPE: [8] POSTED TR TYPE: [9]
    BUDGET FYS: [10]     FUND: [11]      HEADER ACTION IND: [12]  APPOR PERIOD: [13]
    TOTAL REVISED AMT: [14]                  BUDGET LEVEL: [15]
    A
    C                                TRANS TYPE  P
    T DIV    ORG    PROGRAM  BOC  APPRV POST  D   YTD AMT          INC/DEC AMT
    _ ___ ------- --------- ____ ____ ____  _ ___________ ___________
01-[16] [17]  [18]   [19]    [20]  [21]  [22]  1   [23]              [24]
    SPENDING IND: [25]                          2
                                                3
         DESCRIPTION [26]                       4

       SUBALLOT OPTNS                                REVISED
       ORG PGM BOC SPN                  TR TYPE      AMOUNT       INC/DEC AMT
       --- --- --- ---                  ------- --------------- ---------------
             [27]            EST REIM:   [28]          [29]              [30]
```

Figure. Budget Execution Document (BL)

Command Fields

Complete the command fields as follows:

[1] **Commnd** *(no-entry)*

New is system generated. Press [Tab].

---

[2] **DocID** *(required, alphanumeric field; max. of 15 positions)*

The document identifier consists of 3 fields: At the system-generated transaction code (***BL***), press [Tab]. Key in the sec1 code (i.e., the 2 position division code) and press [Tab]. Key in the Org Code (5-positions). Press [#], then press [Enter]. Sequential numbers are generated in positions 10–15.

---

[3] **Status** *(no-entry)*

After the document is processed, this field displays the current status of a document.

---

[4] **BatID** (*no-entry)*

This field is not used for this document.

Command Fields *(cont'd)*

5 **Sec2** *(no-entry)*

The system generates the security code that is inferred from your user ID to verify the user's authority to create the document. This data is not displayed.

Press [Enter] and the screen is ready for data entry.

Header Fields

Complete the header fields as follows:

6 **Trans Date** *(optional default, numeric field; 6 positions)*

Key in the date (*mmddyy*) of the document, usually the current date, but never a future date. If left blank, the system defaults to the date the document is accepted by the system.

7 **Acctg Pd** *(optional default, numeric field; 4 positions)*

Key in the open accounting period date (*mmyy).* If left blank, the system defaults to the accounting period inferred from the document date in the CLDT, but it is not displayed.

8 **Apprv Tr Type** *(required, alpha field; 2 positions)*

Key in the approved transaction type ***AP*** for the dollar amount entered.

9 **Posted Tr Type** *(required, numeric field; 2 positions)*

Key in the posted transaction type ***01*** for the dollar amount entered.

10 **Budget FYs** *(optional default, numeric field; 2 positions)*

Key in the last 2 digits of the budget fiscal year. See the FSYR for valid fiscal years. If left blank, the system defaults to the budget fiscal years inferred from the transaction date.

11 **Fund** *(required, alphanumeric field; max. of 3 positions)*

Key in the fund code. See the FUND for valid fund codes.

12 **Header Action Ind** *(no-entry)*

Leave blank. If the header action indicator is not entered in this field it must be entered in **Field 16**.

13 **Appor Period** *(required, numeric field; 1 position)*

Key in the apportionment period ***1***.

14 **Total Revised Amt** *(no-entry)*

Leave blank.

15 **Budget Level** *(required, alpha field; 2 positions)*

Key in ***AL*** for the allotment level.

Line Fields

Complete the line fields as follows:

16 **Act** *(conditional, alpha field; 1 position)*

If the action code is not entered in the Header Action Ind (**Field 12**), key in one of the following:

A = Adds a new budget authority or reactivates an inactive budget line.
C = Changes an existing authority.
D = Deactivates a budget line

---

17 **Div** *(required, numeric field; 2 positions)*

Key in the division code. See the DVSN for valid division codes.

---

18 **Org** *(required, numeric field; 5 positions)*

Key in the organization level ***1*** code.

---

19 **Program** *(no-entry)*

Leave blank.

---

20 **BOC** *(required, numeric field; 4 positions)*

Key in the BOC rollup code. This field is applicable for States only.

---

21 **Trans Type (Apprv)** *(no-entry)*

This field is system generated with data inferred from the header screen.

---

22 **Trans Type (Post)** *(no-entry)*

This field is system generated with data inferred from the header screen.

---

23 **YTD Amt (1, 2, 3, 4)** *(no-entry)*

Leave blank.

---

24 **Inc/Dec Amt (1, 2, 3, 4)** *(required, numeric field; max. of 15 positions)*

If adding, key in the new amount (use decimal) in the first period. If changing, key in the amount of the increase or decrease.

---

25 **Spending Ind** *(optional, alpha field; 1 position)*

Key in one of the following:

C = Full spending control.
P = Presence spending control.

An entry in this field will override control specified in the FUN2.

---

26 **Description** *(optional, alphanumeric field; max. of 30 positions)*

Key in Org (**Field 18**) and BOC (**Field 20**) titles.

Line Fields *(cont'd)*

27 **Suballot Optns (Org, Pgm, BOC, Spn)** *(conditional, alpha field; max. of 4 positions)*

If suballotments will be used by the organization, key in the following:

Org = Y
Pgm = N
Boc = Y
Spn = N

---

28 **Est Reim Tr Type** *(no-entry)*

This field is not used by RD.

---

29 **Est Reim Revised Amount** *(no-entry)*

This field is not used by RD.

---

30 **Est Reim Inc/Dec Amt** *(no-entry)*

This field is not used by RD.

Processing Instructions

After keying in the data, press [Home] to place the cursor in the Command field. Key in ***E*** (edit) in the Command field to edit the data entered. Press [Enter]. If errors are detected, follow the Error Message Research Instructions. If no errors are detected, key in ***R*** (run) in the Command field to process the data. Press [Enter]. The status of the document is displayed.

Error Message Research Instructions

- Use the down arrow key to move to the error message and press [Enter]. The ERRG is displayed.
- Read the error explanation and follow any instructions provided.
- To return to the document, key in ***E*** in the Action field at any table screen.

Note: To override an error message, key in ***O*** in the Command field and press [Enter]

Note: For more detailed information on the BL**,** see **Part 3**, **Budget And Funds Control**, in the manual.

Standard Voucher Clone Document (CM)

The CM (see Figures 1 and 2) **is used to:**

- Record changes to the accounting distribution codes previously entered in a revenue or spending document.
- Record nonstandard accruals, period-end adjusting entries, and balance sheet transfers.
- Record accounting transactions that occur regularly (e.g., expensing a prepaid item, recording monthly accruals).
- Expense previously recorded expenditures.
- Modify closed documents.
- Post payroll expenditures.

The CM updates the following tables:

- Journal Voucher and Standard Journal Inquiry Table (JVLT)
- Recurring Journal Voucher and Standard Voucher Entry Table (REJV)
- Budget Execution tables (ALOC, ALLT, SASP)
- Document Cross-Reference Inquiry Table (DXRF)

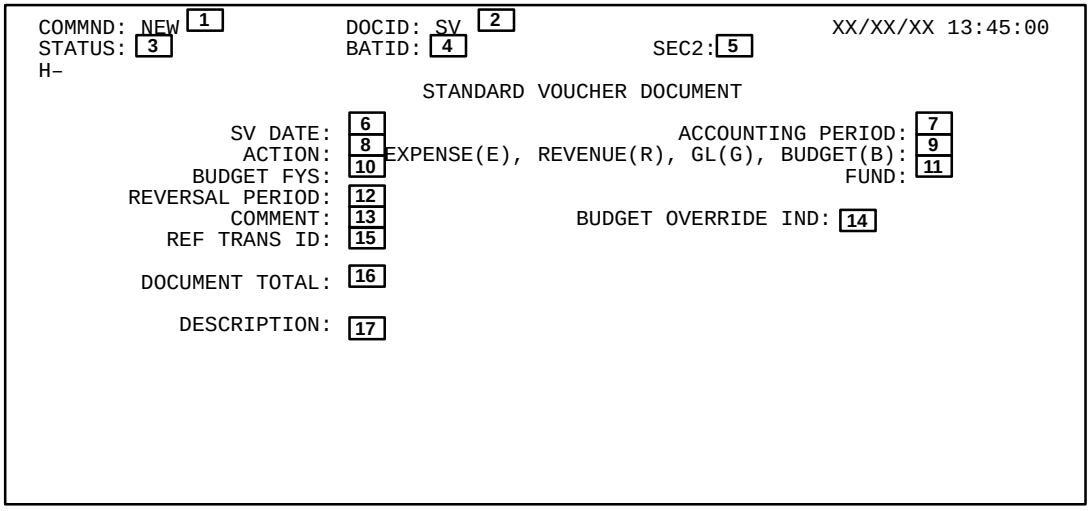

Figure 1. Standard Voucher Clone Document (CM) header fields

Command Fields

Complete the command fields as follows:

1 **Commnd** *(conditional, alpha field; 3 positions)*

New is system generated. If entering a new document or if the document has been archived, tab to the next field. If changing a document currently residing in the Document Suspense File, key in ***Get***.

2 **DocID** *(required, alphanumeric field; max. of 15 positions)*

The document identifier consists of 3 fields: At the system-generated transaction code (***CM***), press [Tab]. Key in the sec1 code (i.e., the 2 position division code) and press [Tab]. Key in the Org Code (5 positions). Press [#], then press [Enter]. Sequential numbers are generated in positions 10-15.

3 **Status** *(no-entry)*

After the document is processed, this field displays the current status of a document.

Command Fields *(cont'd)*

4 **BatID** (*conditional, alphanumeric field; max. of 12 positions)*

If you are adding a document, leave blank. If you are modifying, key in the transactions code (***CM***), the sec1 code and the batch number (*max. of 6 positions*).

5 **Sec2** *(no-entry)*

The system generates the security code that is inferred from your user ID to verify your authority to create this document. This data is not displayed.

Press [Enter] and the screen is ready for data entry.

Header Fields

Complete the header fields as follows:

6 **CM Date** *(optional default, numeric field; 6 positions)*

Key in the date (*mmddyy*) of the document. If left blank, the system defaults to the date the document is accepted by the system.

7 **Accounting Period** *(optional default, numeric field; 4 positions)*

Key in the open accounting period date (*mmyy).* If left blank, the system defaults to the accounting period inferred from the document data in the CLDT, but it is not displayed.

8 **Action** *(required, alpha field;1 position)*

Key in one of the following action codes:
E = Enters a new document.
M = Modifies a previously accepted document.

9 **Expense (E), Revenue (R), GL (G), Budget (B)** *(optional, alpha field; 1 position)*

Key in ***E***, expense adjustment.

10 **Budget FYs** *(no-entry)*

Leave blank.

11 **Fund** *(no-entry)*

Leave blank.

12 **Reversal Period** *(no-entry)*

Leave blank. This field is not used for the CM.

13 **Comments** *(optional, alphanumeric field; max. of 12 position*s)

Key in notes about this document.

14 **Budget Override Ind** *(no-entry)*

Leave blank. The system defaults to ***N.***

Header Fields *(cont'd)*

15 **Ref Trans ID** *(no-entry)*

Leave blank.

16 **Document Total** *(required, numeric field; max. of 15 positions)*

Key in the unsigned amount of all lines in the document. Compute the difference between the total increased amounts and the total decreased amounts.

17 **Description** *(optional, alphanumeric field; max. of 30 positions)*

Key in the description to be used as the default line description for all lines in this document where no line descriptions entered.

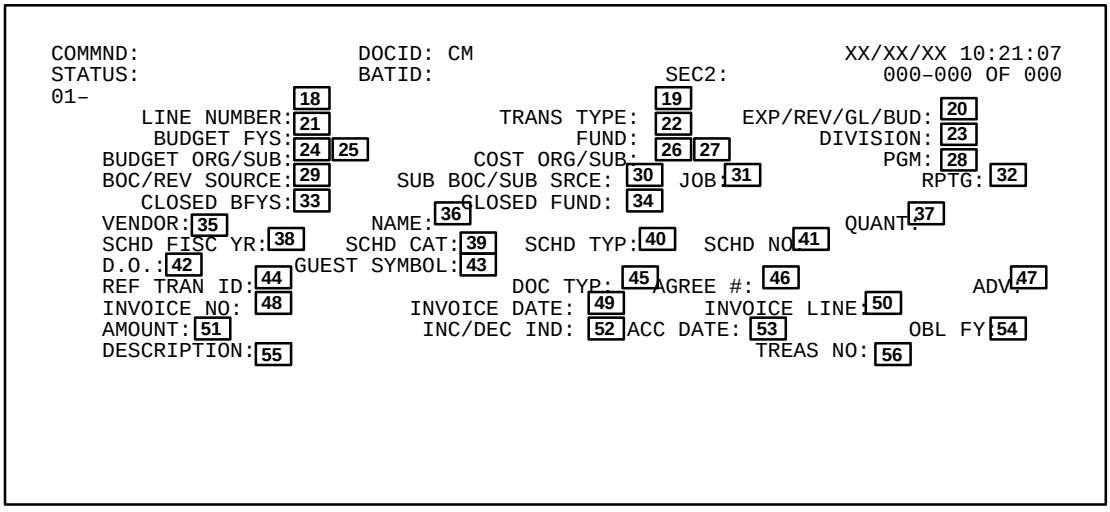

Figure 2. Standard Voucher Clone Document (SV) line fields

Line Fields

Complete the line fields as follows:

18 **Line Number** *(required, numeric field; 3 positions)*

Key in a different number for each line (i.e., ***001*** to ***999*****)**.

19 **Trans Type** *(required, alpha field; 2 positions)*

Key in ***RD***.

20 **Exp/Rev/Gl/Bud** *(no-entry)*

Leave blank.

21 **Budget FYs** *(no-entry)*

Leave blank. The budget fiscal year is derived from the DVAL.

22 **Fund** *(no-entry)*

Leave blank. The fund code is derived from the DVAL.

Line Fields *(cont'd)*

23 **Division** *(no-entry)*

Leave blank. The division code is derived from the DVAL.

24 **Budget Org** *(no-entry)*

Leave blank. The budget organization is derived from the DVAL.

25 **Budget Sub** *(no-entry)*

This field is not used by RD.

26 **Cost Org** *(no-entry)*

This field is not used by RD.

27 **Cost Sub** *(no-entry)*

This field is not used by RD.

28 **Pgm** *(required, alphanumeric field; max. of 9 positions)*

Key in the 9-position ACCS code. Se the PGMT for code verification.

29 **BOC /Rev Source** *(required, numeric field; 4 positions)*

Key in the budget object code or revenue source appropriate for the document. See the BOCT for valid codes.

30 **Sub BOC/Sub Srce** *(no-entry)*

This field is not used by RD.

31 **Job** *(no-entry)*

This field is not used by RD.

32 **Rptg** *(no-entry)*

Leave blank. The reporting category is derived from the DVAL and contains the 2-digit special purpose code.

33 **Closed BFYs** *(no-entry)*

Leave blank.

34 **Closed Fund** *(no-entry)*

Leave blank.

35 **Vendor** *(optional, numeric field; max. of 11 positions)*

Key in the code of the vendor appropriate for the document. See the VEND for valid vendor codes.

36 **Name** *(conditional, alphanumeric field; max. of 30 positions)*

If a vendor code is not specified, key in the vendor's name. Otherwise, optional.

Line Fields *(cont'd)*

37 **Quant** *(no-entry)*
This field is not used by RD.

38 **Schd Fisc Yr** *(no-entry)*
This field is not used by RD.

39 **Schd Cat** *(no-entry)*
This field is not used by RD.

40 **Schd Typ** *(no-entry)*
This field is not used by RD.

41 **Schd No** *(no-entry)*
This field is not used by RD.

42 **D. O.** *(no-entry)*
This field is not used for the CM.

43 **Guest Symbol** *(no-entry)*
This field is not used for the CM.

44 **Ref Tran ID** *(no-entry)*
This field is not used for the CM.

45 **Doc Typ** *(no-entry)*
This field is not used for the CM.

46 **Agree #** *(no-entry)*
This field is not used for the CM.

47 **Adv** *(no-entry)*
This field is not used for the CM.

48 **Invoice No** *(no-entry)*
This field is not used for the CM.

49 **Invoice Date** *(no-entry)*
This field is not used for the CM.

50 **Invoice Line** *(no-entry)*
This field is not used for the CM.

51 **Amount** *(required, numeric field; max. of 15 positions)*
Key in the dollar amount of the item described in the line. If this is a modification of a previous line, key in the amount of the change. The Inc/Dec field indicates whether this is to be added or subtracted from the original amount.

Line Fields *(cont'd)*

52 **Inc/Dec Ind** *(conditional, alpha field; 1 position)*

If making an adjustment, key in one of the following indicators:
I = Indicates the amount entered is an increase.
D = Indicates the amount entered is a decrease.
If left blank, the system defaults to **I**.

---

53 **Acc Date** *(no-entry)*

This field is not used for the CM.

---

54 **Obl FY** *(no-entry)*

This field is not used for the CM.

---

55 **Description** *(optional, alphanumeric field; max. of 30 positions)*

Key in a description.

---

56 **Treas No** *(no-entry)*

This field is not used for the CM.

Processing Instructions

After keying in the data, press [Home] to place the cursor in the Command field. Key in ***E*** (edit) in the Command field to edit the data entered. Press [Enter]. If errors are detected, follow the Error Message Research Instructions. If no errors are detected, key in ***R*** (run) in the Command field to process the data. Press [Enter]. The status of the document is displayed.

Error Message Research Instructions

- Use the down arrow key to move to the error message and press [Enter]. The ERRG is displayed.
- Read the error explanation and follow any instructions provided.
- To return to the document, key in ***E*** in the Action field at any table screen.

Note: To override an error message, key in ***O*** in the Command field and press [Enter]

Note: For more detailed information on the SV, see **Part 4**, **Spending**, in the manual.

Direct Disbursement Document (DD)

The DD (see Figures 1 and 2) **is used to:**

- Record disbursements for events between agencies (interfund transfers). This document is used only by NFC personnel responsible for processing OPAC transactions.

The DD updates the following tables:

- Requisition Header Inquiry and Requisition Accounting Line Inquiry Tables (REQH, REQL)
- Orders Header Inquiry and Purchase Order Accounting Line Inquiry Tables (OBLH, OBLL)
- Voucher Header Inquiry and Voucher Line Inquiry Tables (PVHT, PVLT)
- Vendor Name Inquiry Table (VNAM)
- Budget Execution tables (ALOC, ALLT, SASP)
- General Ledger Balance Inquiry Table (GLBL)
- Payment Voucher Disbursement Cross Reference Table (VXDD)
- Vendor Reference Table (VEND)
- Treasury Schedule Header and Line Tables (TSCH, TSCL)
- Document Tracking tables (DCTE, DCTI)

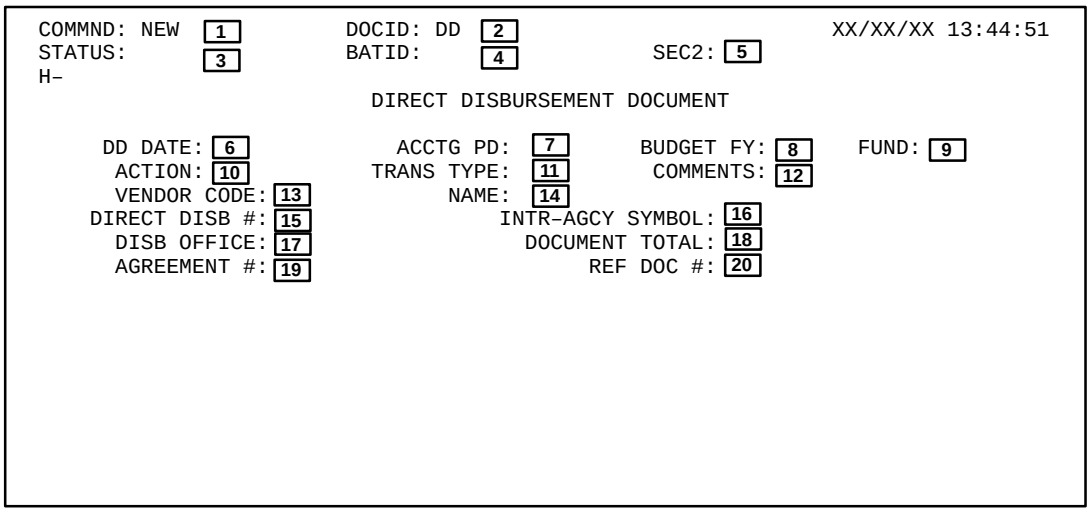

Figure 1. Direct Disbursement Document (DD) header fields

Command Fields

Complete the command fields as follows:

1 **Commnd** *(conditional, alpha field; 3 positions)*

New is system generated. If entering a new document or if the document has been archived, tab to the next field. If changing a document currently residing in the Document Suspense File, key in ***Get***.

2 **DocID** *(required, alphanumeric field; max. of 15 positions)*

The document identifier consists of 3 fields: At the system-generated transaction code (***DD***), press [Tab]. Key in the sec1 code (i.e., the 2 position division code) and press [Tab]. Key in the Org. Code (5 positions). Press [#], then press [Enter]. Sequential numbers are generated in positions 10-15.

Command Fields *(cont'd)*

3 **Status** *(no-entry)*

After the document is processed, this field displays the current status of a document.

4 **BatID** *(conditional, alphanumeric field; max. of 12 positions)*

If you are adding a document, leave blank. If you are modifying or canceling, key in the transactions code (***DD***), the sec1 code and the batch number (*max. of 6 positions*).

5 **Sec2** *(no-entry)*

The system generates the security code that is inferred from your user ID to verify your authority to create this document. The data is not displayed.

Press [Enter] and the screen is ready for data entry.

Header Fields

Complete the header fields as follows:

6 **DD Date** *(required, numeric field; 6 positions)*

Key in the accomplish date (*mmddyy*) of the OPAC bill.

7 **Acctg Pd** *(optional default, numeric field; max. of 4 positions)*

Key in the open accounting period date (*mmyy*). If left blank, the system defaults to the accounting period inferred from the document date in the CLDT.

8 **Budget FY** *(no-entry)*

Leave blank.

9 **Fund** *(no-entry)*

Leave blank.

10 **Action** *(required, alpha field; 1 position)*

Key in one of the following:

E = Enters a new document.
M = Modifies a previously accepted document.
C = Cancels an existing document.

11 **Trans Type** *(required, alpha field; 2 positions)*

Key in transaction type (***OP***) which is used in conjunction with an OPAC transaction.

12 **Comments** *(optional, alphanumeric field; max. of 12 positions)*

Key in notes about this document.

13 **Vendor Code** *(required, alphanumeric field; max. of 11 positions)*

Key in the vendor code. The vendor code is represented by the billing ALC followed by ***FO*** and an ***A***.

Header Fields *(cont'd)*

14 **Name** *(no-entry)*

This field is system generated from the VEND based on the vendor code entered in **Field 13**.

15 **Direct Disb #** *(required, numeric field; 6 positions)*

Key in the last 6 positions of the OPAC bill number.

16 **Intr-Agcy Symbol** *(no-entry)*

This field is not used by RD.

17 **Disb Office** *(required, numeric field; 2 positions)*

Key in the disbursing office code for OPAC.

18 **Document Total** *(required, numeric field; max. of 15 positions)*

Key in the total of the OPAC bill.

19 **Agreement #** *(no-entry)*

This field is not used by RD.

20 **Ref Doc #** *(no-entry)*

This field is not used by RD.

Line Fields

Complete the line fields as follows:

21 **Line #** *(required, numeric field; 3 positions)*

Key in a number from ***001*** to ***999*** for each accounting line. (A single accounting line may be used to provide funding for multiple commodity lines.)

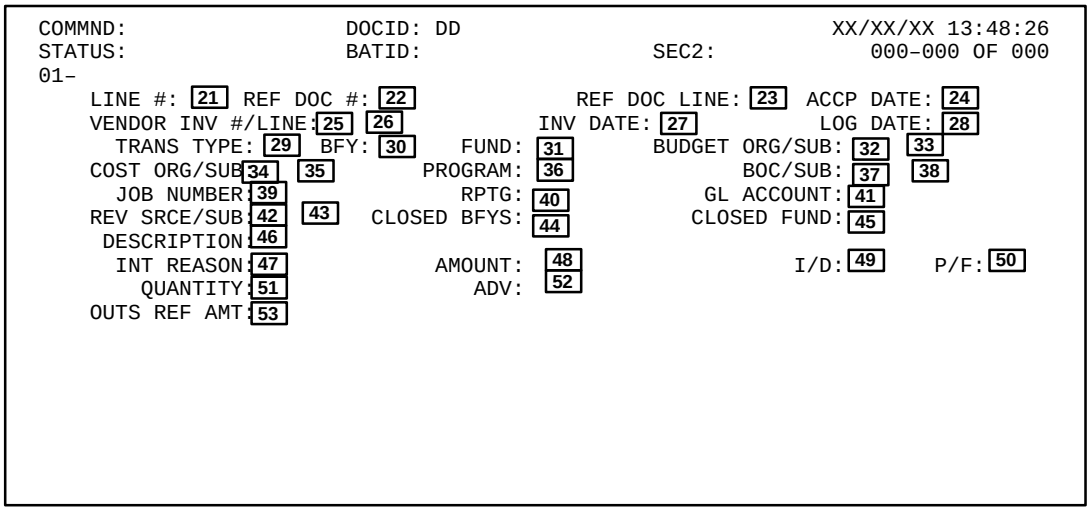

Figure 2. Direct Disbursement Document (DD) line fields

Line Fields *(cont'd)*

22 **Ref Doc #** *(required, alphanumeric field; 13 positions)*
Key in the transaction code and the document reference number.

23 **Ref Doc Line** *(required, numeric field; 3 positions)*
Key in the reference document line.

24 **Accp Date** *(no-entry)*
This field is not used by RD.

25 **Vendor Inv #** *(no-entry)*
This field is not used by RD.

26 **Vendor Inv Line** *(no-entry)*
This field is not used by RD.

27 **Inv Date** *(no-entry)*
This field is not used by RD.

28 **Log Date** *(no-entry)*
This field is not used by RD.

29 **Trans Type** *(conditional, alpha field; 2 positions)*
If the Trans Type (**Field 11**) is not entered in the document header, key in the transaction type ***OP*** which is used for OPAC disbursed payments for goods and/or services. Otherwise, optional.

30 **BFY** *(no-entry)*
Leave blank. The budget organization code is derived from the DVAL.

31 **Fund** *(no-entry)*
Leave blank. The fund code is derived from the DVAL.

32 **Budget Org** *(no-entry)*
Leave blank. The budget organization code is derived from the DVAL.

33 **Budget Sub** *(no-entry)*
This field is not used by RD.

34 **Cost Org** *(no-entry)*
This field is not used by RD.

35 **Cost Sub** *(no-entry)*
This field is not used by RD.

36 **Program** *(no-entry)*
Leave blank. The 9-position ACCS code is inferred from the reference document.

Line Fields *(cont'd)*

37 **BOC** *(no-entry)*

Leave blank. The code is inferred from the reference document.

38 **Sub** *(no-entry)*

This field is not used by RD.

39 **Job Number** *(no-entry)*

This field is not used by RD.

40 **Rptg** *(no-entry)*

Leave blank. The reporting category is derived from the DVAL and contains the 2-position special purpose code.

41 **GL Account** *(no-entry)*

This field is not used by RD.

42 **Rev Srce** *(no-entry)*

This field is not used by RD.

43 **Sub Rev** *(no-entry)*

This field is not used by RD.

44 **Closed BFYs** *(no-entry)*

Leave blank.

45 **Closed Fund** *(no-entry)*

Leave blank.

46 **Description** *(optional, alphanumeric field; max. of 30 positions)*

Key in notes about this line.

47 **Int Reason** *(no-entry)*

This field is not used by RD.

48 **Amount** *(required, numeric field; max. of 15 positions)*

Key in the dollar amount. The amount should be entered in dollars and cents (e.g., ***13.50***). If this is a new line or a modification to a previous line, key in the amount by which to increase or decrease the line to be modified (e.g., if the current requisition line amount is ***10*** but it should be ***15***, key in ***5***) or key in the amount for the new line that is being added.

49 **I/D** *(optional default, alpha field; 1 position)*

Key in one of the following.

I = Indicates the amount entered is an increase.
D = Indicates the amount entered is a decrease.

If left blank on a modification, the system defaults to ***I***.

Line Fields *(cont'd)*

50 **P/F** *(required, alpha field; 1 position)*

Key in one of the following:
P = Indicates a partial payment.
F = Indicates a final payment.

---

51 **Quantity** *(no-entry)*

This field is not used by RD.

---

52 **Adv** *(no-entry)*

This field is not used by RD.

---

53 **Outs Ref Amt** *(no-entry)*

This field is not used by RD.

Processing Instructions

After keying in the data, press [Home] to place the cursor in the Command field. Key in ***E*** (edit) in the Command field to edit the data entered. Press [Enter]. If errors are detected, follow the Error Message Research Instructions. If no errors are detected, key in ***R*** (run) in the Command field to process the data. Press [Enter]. The status of the document is displayed.

Error Message Research Instructions

- Use the down arrow key to move to the error message and press [Enter]. The ERRG is displayed.
- Read the error explanation and follow any instructions provided.
- To return to the document, key in ***E*** in the Action field at any table screen.

Note: To override an error message, key in ***O*** in the Command field and press [Enter]

Note: For more detailed information on the DD, see **Part 4**, **Spending**, in the manual.

Journal Voucher Document (JV)

The JV (see Figures 1 and 2) **is used to:**

- Handle miscellaneous accounting transactions not handled by another function.
- Record nonstandard accruals, and period-end adjusting entries, and balance sheet transfers.
- Record transactions that are automatically reversed at a later date and transactions that reclassify accounts.

Note: Journal Voucher documents should not be entered without Departmental approval.

The JV updates the following tables:

- Journal Voucher and Standard Journal Table (JVLT)
- Budget Execution tables (ALOC, ALLT, SASP)
- Document Cross Reference Inquiry Table (DXRF)

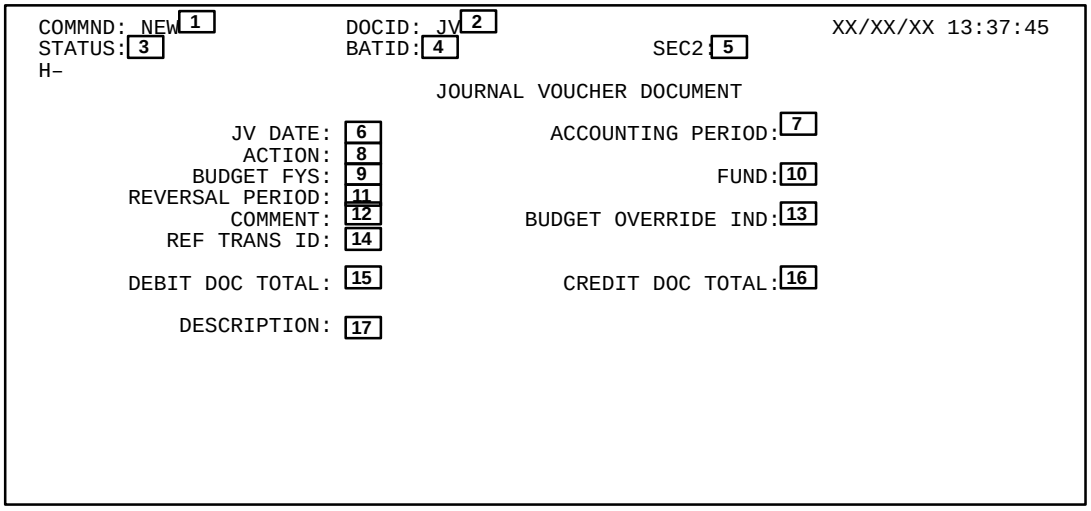

Figure 1. Journal Voucher Document (JV) header fields

Command Fields

Complete the command fields as follows:

1 **Commnd** *(conditional, alpha field; 3 positions)*

New is system-generated. If entering a new document or if the document has been archived, tab to the next field. If modifying a document currently residing in the Document suspense File, key in ***Get***.

2 **DocID** *(required, alphanumeric field; max. of 15 positions)*

The document identifier consists of 3 fields: At the system-generated transaction code (***JV***), press [Tab]. Key in the sec1 code (i.e., the 2 position division code) and press [Tab]. Key in the Org Code (5-positions). Press [#], then press [Enter]. Sequential numbers are generated in positions 10–15.

3 **Status** *(no-entry)*

After the document is processed, this field displays the current status of a document.

4 **BatID** (*conditional, alphanumeric field; max. of 12 positions)*

If you are adding a document, leave blank. If you are modifying, key in the transaction code (***JV***), the sec1 code and the batch number (*max. of 6 positions*).

Command Fields *(cont'd)*

5 **Sec2** *(no-entry)*

The system generates the security code that is inferred from your user ID to verify your authority to create this document. This data is not displayed.

Press [Enter] and the screen is ready for data entry.

Header Fields

Complete the header fields as follows:

6 **JV Date** *(optional default, numeric field; 6 positions)*

Key in date (*mmddyy*) to be associated with the document. If left blank, the system defaults to the date the document was accepted by the system.

7 **Accounting Period** *(optional default, numeric field; 4 positions)*

Key in the open accounting period date (*mmyy).* If left blank, the system defaults to the accounting period inferred from the document date in the CLDT, but it is not displayed.

8 **Action** *(optional default, alpha field; 1 position)*

Key in one of the following:
E = Enter new document
M = Modify a previously accepted document
If left blank, the system defaults to ***E***.

9 **Budget FYs** *(no-entry)*

Leave blank.

10 **Fund** *(no-entry)*

Leave blank.

11 **Reversal Period** (*conditional, numeric field; max. of 4 positions)*

If the JV should be automatically reversed, key in the accounting period in which the reversal should take place in *mmyy* format. Otherwise, leave blank.

12 **Comments** *(optional, alphanumeric field; max. of 12 positions)*

Key in any notes about this document.

13 **Budget Override Ind** *(optional default, alpha field; 1 position)*

Key in ***Y*** or ***N***. ***Y*** allows spending controls to be overridden. If left blank, the system defaults to ***N.***

14 **Ref Trans ID** *(conditional, alphanumeric field; max. of 13 positions)*

If this document relates to another document, key in the reference transaction code and document number of the document being referenced.

15 **Debit Doc Total** *(required, numeric field; max. of 15 positions)*

Key in the total of all debit lines in the document.

Header Fields *(cont'd)*

16 **Credit Doc Total** *(required, numeric field; max. of 15 positions)*

Key in the total of all credit lines in the document.

17 **Description** *(optional, alphanumeric field; max. of 30 positions)*

Key in a description to serve as the default line description for all lines in this document.

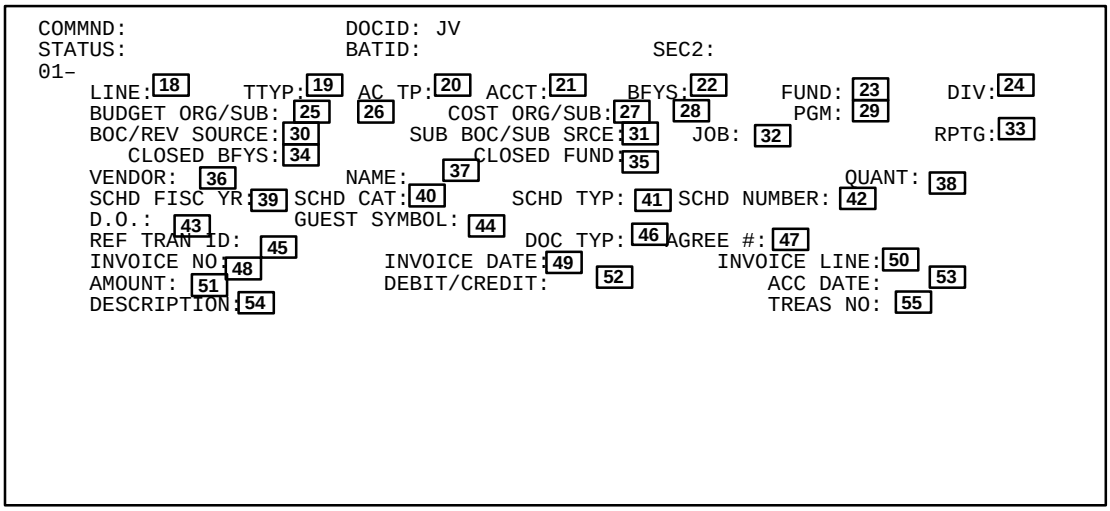

Figure 2. Journal Voucher Document (JV) line fields

Line Fields

Complete the line fields as follows:

18 **Line** *(required, numeric field; 3 positions)*

Key in a different number for each line (i.e., ***001*** to ***999*****)**.

19 **TTyp** *(required, alpha field; 2 positions)*

Key in the transaction type that defines the accounting model. See the ACED for valid transaction types.

20 **Ac Tp** *(required, numeric field; 2 positions)*

Key in the valid account type for the General Ledger account in this line.

21 **Acct** (*required, alphanumeric field; 4 positions)*

Key in the valid General Ledger account code appropriate for this document line.

22 **BFYs** *(no-entry)*

Leave blank. The budget fiscal year is derived from the DVAL.

23 **Fund** *(no-entry)*

Leave blank. The fund code is derived from the DVAL.

Line Fields *(cont'd)*

24 **Div** *(no-entry)*

Leave blank. The division code is derived from the DVAL.

25 **Budget Org** *(no-entry)*

Leave blank. The budget organization code is derived from the DVAL.

26 **Budget Sub** *(no-entry)*

Leave blank. This field is not used by RD.

27 **Cost Org** *(no-entry)*

Leave blank. The cost organization code is derived from the DVAL.

28 **Cost Sub** *(no-entry)*

This field is not used by RD.

29 **Pgm** *(required, numeric field; max. of 9 positions)*

Key in the 9-position ACCS code.

30 **BOC/Rev Source** *(conditional, numeric field; 4 positions)*

If required by account type, key in the budget object code or revenue source appropriate for this document. Otherwise, optional.

31 **Sub BOC/Sub Srce** *(no-entry)*

This field is not used by RD.

32 **Job** *(no-entry)*

This field is not used by RD.

33 **Rptg** *(no-entry)*

Leave blank. The reporting category is derived from the DVAL and contains the 2-position special purpose code.

34 **Closed BFYs** *(no-entry)*

Leave blank.

35 **Closed Fund** *(no-entry)*

Leave blank.

36 **Vendor** *(optional, alphanumeric field; max. of 11 positions)*

Key in the code of the vendor associated with this line. See the VEND for valid vendor codes.

37 **Name** *(conditional, alphanumeric field; max. of 30 positions)*

If a vendor code is not specified, key in the vendor's name. Otherwise, leave blank.

38 **Quant** *(optional, numeric field; max. of 9 positions)*

Key in the number of units for this line.

Line Fields *(cont'd)*

39 **Schd Fisc Yr** *(conditional, numeric field; 2 positions)*

If a schedule number was entered for Treasury-disbursing agencies, key in the fiscal year associated with the payment. Otherwise, leave blank.

40 **Schd Cat** *(conditional, alpha field; 1 position)*

If a schedule number was entered for Treasury-disbursing agencies, key in one of the following valid payment method codes:

T = Automated Tape Schedule
M = Manual SF-1166
A = ACH Tape
S = TFCS SF-1166

41 **Schd Typ** *(optional, alpha field; 1 position)*

Key in one of the following voucher schedule types:

M = Miscellaneous
T = Transportation

42 **Schd Number** *(optional, numeric field; 9 positions)*

Key in the agency schedule number for the line being entered.

43 **D.O.** *(optional, numeric field; 4 positions)*

Key in the disbursing office for the line being entered.

44 **Guest Symbol** *(conditional, numeric field; max. of 15 positions)*

If the line affects interfund transfers, key in the Treasury symbol of the other fund. Otherwise, leave blank.

45 **Ref Tran ID** *(conditional, alphanumeric field; max. of 16 positions)*

If the document relates to another document, key in the Tran ID of the reference document. If a Ref Tran ID (**Field 14**) is entered in the header, key in only the reference document line number. Otherwise, leave blank.

46 **Doc Typ** *(conditional, alpha field; 1 position)*

If a reference document was entered, key in the document type associated with that reference document. Otherwise, leave blank.

47 **Agree #** *(optional, alphanumeric field; max. of 15 positions)*

Key in the agreement number appropriate for this line.

48 **Invoice No** *(conditional, numeric field; max. 20 positions)*

If this document references a vendor invoice, key in the invoice number. Otherwise, leave blank.

49 **Invoice Date** *(conditional, numeric field; 6 positions)*

If this line references a vendor invoice, key in the invoice date in *(mmddyy)*. Otherwise, leave blank.

Line Fields *(cont'd)*

50 **Invoice Line** *(conditional, numeric field; 3 positions)*

If this line references a vendor invoice, key in the invoice line number. Otherwise, leave blank.

---

51 **Amount** *(required, numeric field; max. 15 positions)*

Key in the amount of the item described in this line.

---

52 **Debit/Credit** *(required, alpha field; 1 position)*

Key in one of the following to indicate that the amount is either a debit or a credit:
D = Debit amount
C = Credit amount

---

53 **Acc Date** *(optional, numeric field; 6 positions)*

Key in the accomplished date (*mmddyy*) for the document being entered.

---

54 **Description** *(optional, alphanumeric field; max. of 30 positions)*

Key in a description.

---

55 **Treas No** *(optional, numeric field; 11 positions)*

Key in the Treasury document number (i.e., the pre-printed SF-1167 number or the SIBAC number) for the line being entered.

Processing Instructions

After keying in the data, press [Home] to place the cursor in the Command field. Key in ***E*** (edit) in the Command field to edit the data entered. Press [Enter]. If errors are detected, follow the Error Message Research Instructions. If no errors are detected, key in ***R*** (run) in the Command field to process the data. Press [Enter]. The status of the document is displayed.

Error Message Research Instructions

- Use the down arrow key to move to the error message and press [Enter]. The ERRG is displayed.
- Read the error explanation and follow any instructions provided.
- To return to the document, key in ***E*** in the Action field at any table screen.

Note: To override an error message, key in ***O*** in the Command field and press [Enter]

Note: For more detailed information on the JV, see **Part 6**, **General Ledger**, in the manual.

Miscellaneous Order Document (MO)

The MO (see Figures 1 and 2) **is used to:**

- Enter obligation information prior to receipt of goods and/or services being rendered.

The MO updates the following tables:

- Orders Header Inquiry and Purchase Order Accounting Line Inquiry Tables (OBLH, OBLL)
- Requisition Header Inquiry and Requisition Accounting Line Inquiry Tables (REQH, REQL)
- Budget Execution tables (ALOC, ALLT, SASP)
- General Ledger Balance Inquiry Table (GLBL)
- Document Cross-Reference Inquiry Table (DXRF)

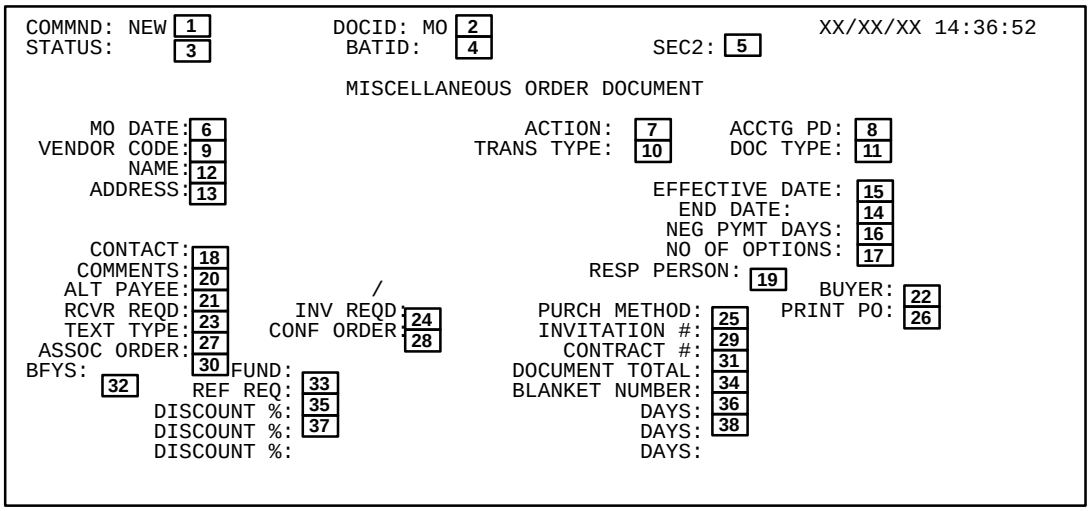

Figure 1. Miscellaneous Order Document (MO) header fields

Command Fields

Complete the command fields as follows:

1 **Commnd** *(conditional, alpha field; 3 positions)*

New is system generated. If entering a new document or if the document has been archived, tab to the next field. If changing a document currently residing in the Document Suspense File, key in ***Get***.

---

2 **DocID** *(required, alphanumeric field; max. of 15 positions)*

The document identifier consists of 3 fields: At the system-generated transaction code (***MO***), press [Tab]. Key in the sec1 code (i.e., the 2 position division code) and press [Tab]. Key in the Org Code (5 positions). Press [#], then press [Enter]. Sequential numbers are generated in positions 10-15.

---

3 **Status** *(no-entry)*

After the document is processed, this field displays the current status of a document.

Command Fields *(cont'd)*

4 **BatID** *(conditional, alphanumeric field; max. of 12 positions)*

If you are adding a document, leave blank. If you are modifying or cancelling, key in the transactions code (***MO***), the sec1 code, and the batch number (*max. of 6 positions*).

5 **Sec2** *(no-entry)*

The system generates the security code that is inferred from your user ID to verify your authority to create the document. This data is not displayed.

Press [Enter] and the screen is ready for data entry.

Header Fields

Complete the header fields as follows:

6 **MO Date** *(optional default, numeric field; 6 positions)*

Key in the date (*mmddyy*) of the document, usually the current date. It cannot be a future date. For OPAC payments, use the date the order was placed. If left blank, the system defaults to the date the MO is accepted.

7 **Action** *(required, alpha field; 1 position)*

Key in one of the following:

E = Adds a new document.
M = Modifies/cancels line amounts on a previous document or add a new line.
X = Cancels an existing document if it does not reference a subsequent document. If left blank, the system defaults to ***E***.

8 **Acctg Pd** *(optional default, numeric field; 4 positions)*

Key in the open accounting period date (*mmyy*). If left blank, the system defaults to the accounting period inferred from the document date in the CLDT, but it is not displayed. The Acctg Pd refers to the fiscal month and year. You cannot enter a future accounting period.

9 **Vendor Code** *(required, alphanumeric field; max. of 11 positions)*

Key in the vendor code. If not known, see the VEND for valid vendor codes. For OPAC, the vendor code is the vendor's ALC followed by FO A.

10 **Trans Type** *(required, numeric field; 2 positions)*

Key in transaction type ***01*** which is used to obligate for contract obligations, lease agreements, equipment rentals, training, OPAC transactions, damages to land, and the approval of grants. If this is a modification, this field is system generated with data inferred from the original document.

11 **Doc Type** *(conditional, alphanumeric field; 1 position)*

If the MO is for a BPA, key in ***B***. Otherwise, enter any RD-defined value which may be used to define this order. The document type on the original order cannot be changed.

12 **Name** *(no-entry)*

The name is inferred from the VEND based on entry in the Vendor Code field.

13 **Address** *(no-entry)*

The address is inferred from the VEND based on entry in the Vendor Code field.

Header Fields *(cont'd)*

14 **Effective Date** *(optional default, numeric field; 6 positions)*

Key in the beginning date (*mmddyy*) of the order. If left blank, the system defaults to the document date.

15 **End Date** *(optional, numeric field; 6 positions)*

Key in the ending date (*mmddyy*) of the order.

16 **Neg Pymt Days** *(optional default, numeric field; max. of 2 positions)*

Key in the number of days negotiated to pay the obligation after the invoice is received. If left blank, the system defaults to ***0*** (zero).

17 **Contact** *(optional default, alphanumeric field; max. of 30 positions)*

Key in the name of the person representing the vendor. If left blank, the system defaults to the contact name in the VEND.

18 **No of Options** *(optional, alphanumeric field; max. of 2 positions)*

Key in the number of years this contract can be renewed (whole numbers only).

19 **Comments** *(optional, alphanumeric field; max. of 12 positions)*

Key in any pertinent information identifying the order.

20 **Resp Person** *(optional, alphanumeric field; max. of 15 positions)*

Key in the name of the person who may be contacted regarding the order.

21 **Alt Payee** *(optional, alphanumeric field; max. of 11 positions)*

Key in the code of the vendor who may be used as an alternate payee. See the VEND for valid vendor codes.

22 **Buyer** *(optional, alphanumeric field; 2 positions)*

Key in the code of the buyer processing this order.

23 **Rcvr Reqd** *(optional default, alpha field; 1 position)*

Key in one of the following:
Y = To indicate that a receipt is required.
N = To indicate that an receipt is not required.
If left blank, the system defaults to the value of the Misc Order Requires Receiver fields in the SOPT.

24 **Inv Reqd** *(optional default, alpha field; 1 position)*

Key in one of the following:
Y = To indicate that an invoice is required.
N = To indicate that an invoice is not required.
If left blank, the system defaults to the value of the Misc Order Requires Vndr Invc field in the SOPT.

Header Fields *(cont'd)*

25 **Purch Method** *(optional, numeric field; 1 position)*

Key in the appropriate code for the type of purchase order being entered.

---

26 **Print Po** *(optional default, alpha field; 1 position)*

Key in one of the following:
Y = Print this order
N = Do not print this order
If left blank, the system defaults to the value in the Print field in the TCAT.

---

27 **Text Type** *(optional, numeric field; 2 positions)*

Key in a valid text type from the TXTP. The text type specifies a standard clause or set of standard clauses to be printed on the purchase order. The text type entered is associated with the document as a whole.

---

28 **Conf Order** *(optional default, alpha field; 1 position)*

Key in ***Y*** if this is a confirming order, in which case the purchase order printing program will print *Confirming Order* on the purchase order. Otherwise, key in ***N***. If left blank, the system defaults to ***N***.

---

29 **Invitation #** *(optional, numeric field; max. of 10 positions)*

Key in the invitation number used in contract bidding.

---

30 **Assoc Order** *(optional, alphanumeric field; max. of 13 positions)*

Key in the transaction code and document number of an associated recurring order.

---

31 **Contract #** *(optional, numeric field; max. of 15 positions)*

Key in the contract number for the order.

---

32 **BFYs** *(no-entry)*

Leave blank.

---

33 **Fund** *(no-entry)*

Leave blank.

---

34 **Document Total** *(required, numeric field; max. of 15 positions)*

Key in the total net amount of all accounting lines for the order. If modifying, the entry should reflect the total amount of the transaction; not the total amount of the existing obligation. Key in the total net amount of all modified accounting lines for the order.

---

35 **Ref Req** *(required, alphanumeric field; max. of 13 positions)*

Key in the transaction code and document number of the requisition being referenced.

---

36 **Blanket Number** *(conditional, numeric field; max. of 11 positions)*

If the Doc Type (**Field 11**) is ***B***, indicating an order against a blanket agreement, key in the blanket agreement number between the Government and the vendor which governs the terms of this order. Otherwise, optional.

Header Fields *(cont'd)*

37 **Discount %** *(optional, numeric field; max. of 6 positions)*

Key in the percentage of discount with three decimal places (e.g., 99 or 99.999).

38 **Days** *(conditional, numeric field; 2 positions)*

If the discount percentage is entered, key in the number of days the discount is applicable. Otherwise, not allowed.

Line Fields

39 **Line** *(required, numeric field; 3 positions)*

Key in the number of the accounting line from ***001*** to ***999***. If modifying, key in the number of the accounting line to be modified or key in a new line to be added.

40 **Ref Req–Line** *(required, numeric field; max. of 13 positions)*

Key in the transaction code, document number, and reference line number for the requisition being referenced. If this order references a previous requisition, this field cannot be modified.

41 **Budget FYs** *(no-entry)*

Leave blank. The budget fiscal year is derived from the DVAL.

42 **Fund** *(no-entry)*

Leave blank. The fund is derived from the DVAL.

43 **Budget Org** *(no-entry)*

Leave blank. The budget organization is derived from the DVAL.

44 **Budget Sub** *(no-entry)*

This field is not used by RD.

```
COMMND:                DOCID: MO   01   99999999999          XX/XX/XX 14:37:25
STATUS:                BATID:                SEC2:            000–000 OF 000
01–
      LINE: 39      REF REQ–LINE: 40              BUDGET FYS: 41
      FUND: 42    BUDGET ORG/SUB: 43    / 44    COST ORG/SUB: 45      / 46
       PGM: 47          BOC /SUB: 48   / 49           RPTG: 50
    JOB NO: 51       CLOSED BFYS: 52            CLOSED FUND: 53
    AMOUNT: 54              I/D: 55  P/F: 56   ASSOC ORDER: 57
     DESCR: 58
02–
      LINE:          REF REQ–LINE:                 BUDGET FYS:
      FUND:        BUDGET ORG/SUB:         /       COST ORG/SUB:         /
       PGM:              BOC /SUB:       /               RPTG:
    JOB NO:           CLOSED BFYS:                CLOSED FUND:
    AMOUNT:                  I/D:   P/F:         ASSOC ORDER:
     DESCR:
```

Figure 2. Miscellaneous Order Document (MO) line fields

Line Fields *(cont'd)*

45 **Cost Org** *(no-entry)*

This field is not used by RD.

---

46 **Cost Sub** *(no-entry)*

This field is not used by RD.

---

47 **Pgm** *(required, numeric field; 9 positions)*

Key in the program code.

---

48 **BOC** *(conditional, numeric field; 4 positions)*

If adding a BOC, the code is inferred from the reference document. See the BOCT for valid budget object codes. In modifying, if an obligation has not been established, you must enter the original line number, then enter the total amount of the original line in the amount field and D in the I/D field. Press [Tab] and create a new line by assigning a new line number, or the same line number, and enter the data in the Program, BOC, and Amount fields.

---

49 **Sub** *(no-entry)*

This field is not used by RD.

---

50 **Rptg** *(no-entry)*

Leave blank. The reporting category code is derived from the DVAL and contains the 2-position special purpose code.

---

51 **Job No** *(no-entry)*

This field is not used by RD.

---

52 **Closed BFYs** *(no-entry)*

Leave blank.

---

53 **Closed Fund** *(no-entry)*

Leave blank.

---

54 **Amount** *(required, numeric field; max. of 15 positions)*

Key in the line amount. If modifying, key in the amount by which to increase or decrease the line to be modified or key in the amount for the new line that is being added.

---

55 **I/D** *(optional default, alpha field; 1 position)*

If this is a modification to a previously accepted document, key in one of following:

I = Indicates the amount entered is an increase.

D =Indicates the amount entered is a decrease.

If left blank, the system defaults to ***I***.

---

56 **P/F** *(required, alpha field; 1 position)*

Key in one of the following to indicate whether the requisition should be partially or fully liquidated:

P = Indicates a partial order.

F = Indicates a final order.

If the line amount causes the order amount to exceed the requisition amount, key in ***F***.

Line Fields *(cont'd)*

57 **Assoc Order** *(no-entry)*

This field is not used by RD.

58 **Descr** *(optional, alphanumeric field; max. of 31 positions)*

Key in any pertinent information to identify the line amount.

Processing Instructions

After keying in the data, press [Home] to place the cursor in the Command field. Key in ***E*** (edit) in the Command field to edit the data entered. Press [Enter]. If errors are detected, follow the Error Message Research Instructions. If no errors are detected, key in ***R*** (run) in the Command field to process the data. Press [Enter]. The status of the document is displayed.

Error Message Research Instructions

- Use the down arrow key to move to the error message and press [Enter]. The ERRG is displayed.
- Read the error explanation and follow any instructions provided.
- To return to the document, key in ***E*** in the Action field at any table screen.

Note: To override an error message, key in ***O*** in the Command field and press [Enter]

Note: For more detailed information on the MO, see **Part 4**, **Spending**, in the manual.

Apportionment Approval Document (PA)

The PA (see Figure) **is used at the National Office, Budget Division to:**

- Approve pending apportionment amounts and make them available for distribution.

The PA updates the following tables:

- Apportionment Inquiry Table (APOR)
- Appropriation Inquiry Table (APPR)
- Fiscal Year Appropriation Inquiry Table (FAPP)
- Fiscal Year Apportionment Inquiry Table (FAPR)
- General Ledger Balance Inquiry Table (GLBL)

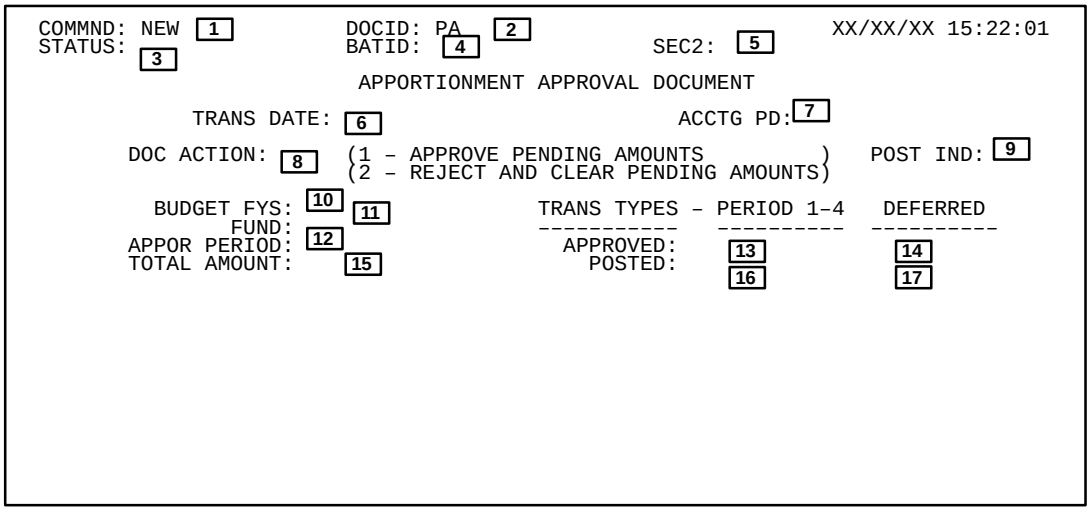

Figure. Apportionment Approval Document (PA)

Command Fields

Complete the command fields as follows:

1 **Commnd** *(no-entry)*

New is system generated. Press [Tab].

---

2 **DocID** *(required, alphanumeric field; max. of 15 positions)*

The document identifier consists of 3 fields: At the system-generated transaction code (***PA***), press [Tab]. Key in the sec1 code (i.e., the 2 position division code) and press [Tab]. Key in the Org Code (5-positions). Press [#], then press [Enter]. Sequential numbers are generated in positions 10–15.

---

3 **Status** *(no-entry)*

After the document is processed, this field displays the current status of a document.

---

4 **BatID** (*no-entry)*

This field is not used for this document.

---

5 **Sec2** *(no-entry)*

The system generates the security code that is inferred from your user ID to verify your authority to create the document. This data is not displayed.

Press [Enter] and the screen is ready for data entry.

Other Fields

Complete the other fields as follows:

6 **Trans Date** *(optional default, numeric field; 6 positions)*

Key in the date (*mmddyy*) of the document, usually the current date, but never a future date. If left blank, the system defaults to the date the document is accepted.

---

7 **Acctg Period** *(optional default, numeric field; 4 positions)*

Key in the open accounting period date (*mmyy*). If left blank, the system defaults to the accounting period inferred from the document date in the CLDT, but it is not displayed.

---

8 **Doc Action** *(required, numeric field; 1 position*)

Key in one of the following:
1 = Approves pending amounts.
2 = Rejects and clears pending amounts.

---

9 **Post Ind** *(required, alpha field; 1 position)*

Key in ***Y*** to post to YTD budget authority. Posting reflects the Appor Period (**Field 12**) through the end of the fiscal year.

---

10 **Budget FYs** *(optional default, numeric field; 2 positions)*

Key in the last 2 digits of the budget fiscal year(s). See FSYR for valid fiscal years. If left blank, the system defaults to the budget fiscal years inferred from the transaction date.

---

11 **Fund** *(required, alphanumeric field; max. of 3 positions*)

Key in the fund code. See the FUND for valid fund codes.

---

12 **Appor Period** *(required, numeric field; 1 position)*

Key in the apportionment period ***1***.

---

13 **Trans Types Approved Period 1-4** *(required, alpha field; 2 positions)*

Key in the accounting transaction type ***AP*** for approval.

---

14 **Trans Types Approved (Deferred)** *(no-entry)*

Leave blank.

---

15 **Total Amount** *(optional default, numeric field; max. of 15 positions)*

Key in the sum (use decilam) of the pending amounts for all apportionment periods. If left blank, all pending authority for a fund will be approved.

---

16 **Trans Types Posted (Period 1-4)** *(required, numeric field; 2 positions)*

Key in the accounting transaction type ***01***.

---

17 **Trans Types Posted (Deferred)** *(no-entry)*

Leave blank.

Processing Instructions

After keying in the data, press [Home] to place the cursor in the Command field. Key in ***E*** (edit) in the Command field to edit the data entered. Press [Enter]. If errors are detected, follow the Error Message Research Instructions. If no errors are detected, key in ***R*** (run) in the Command field to process the data. Press [Enter]. The status of the document is displayed.

Error Message Research Instructions

- Use the down arrow key to move to the error message and press [Enter]. The ERRG is displayed.
- Read the error explanation and follow any instructions provided.
- To return to the document, key in ***E*** in the Action field at any table screen.

Note: To override an error message, key in ***O*** in the Command field and press [Enter]

Note: For more detailed information on the PA, see **Part 3**, **Budget And Funds Control**, in the manual.

Payment Voucher Document (PV)

The PV (see Figures 1 and 2) **is used to:**

- Record authorization of payment to a vendor for goods or services accepted and invoiced.
- Record revenue refunds.
- Record balance sheet transfers.

The PV updates the following tables:

- Voucher Header Inquiry and Voucher Line Inquiry Tables (PVHT, PVLT)
- Voucher Holdback Inquiry Table (PVCH)
- Voucher Tracking Inquiry Table (VCTI)
- Treasury Schedule Control Header and Treasury Schedule Control Line Inquiry Tables (TSCH, TSCL)
- Payment Voucher Line - Disbursement Document Cross-Reference Inquiry Table (VXDD)
- Requisition Header Inquiry and Requisition Accounting Line Inquiry Tables (REQH, REQL)
- Orders Header Inquiry and Purchase Order Accounting Line Inquiry Tables (OBLH, OBLL)
- Budget Execution tables (ALOC, ALLT, SASP)
- General Ledger Balance Inquiry Table (GLBL)
- Document Cross Reference Inquiry Table (DXRF)

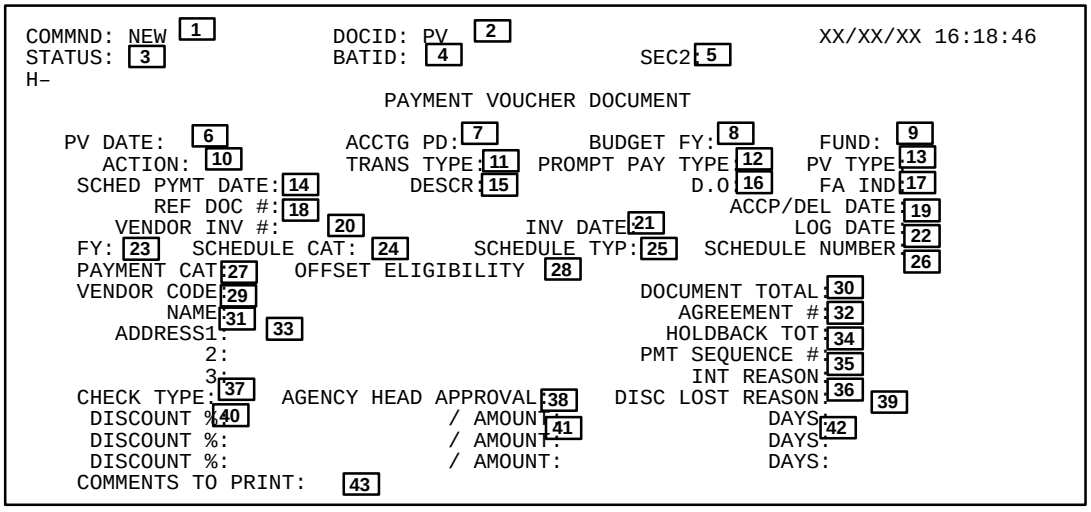

Figure 1. Payment Voucher Document (PV) header fields

Command Fields

Complete the command fields as follows:

1 **Commnd** *(conditional, alpha field; 3 positions)*

New is system generated. If entering a new document or if the document has been archived, tab to the next field. If changing a document currently residing in the Document Suspense File, key in ***Get***.

---

2 **DocID** *(required, alphanumeric field; max. of 15 positions)*

The document identifier consists of 3 fields: At the system-generated transaction code (***PV***), press [Tab]. Key in the sec1 code (i.e., the 2 position division code), and press [Tab]. Key in the Org Code (5 positions). Press [#], then press [Enter]. Sequential numbers are generated in positions 10-15.

---

3 **Status** *(no-entry)*

After the document is processed, this field displays the current status of a document.

Command Fields *(cont'd)*

4 **BatID** *(conditional, alphanumeric field; max. of 12 positions)*
If you are adding a document, leave blank. If you are modifying or cancelling, key in the transactions code (***PV***), the sec1 code, and the batch number (*max. of 6 positions*).

5 **Sec2** *(no-entry)*
The system generates the security code that is inferred from your user ID to verify your authority to create the document. This data is not displayed.

Press [Enter] and the screen is ready for data entry.

Header Fields

Complete the header fields as follows:

6 **PV Date** *(optional default, numeric field; 6 positions)*
Key in the date (*mmddyy*) of the document, usually the current date. The PV Date cannot be a future date. If left blank, the system defaults to the date the PV is accepted. It is not displayed.

7 **Acctg Pd** *(optional default, numeric field; 4 positions)*
Key in the open accounting period date (*mmyy*). If left blank, the system defaults to the accounting period inferred from the document date in the CLDT, but it is not displayed. The Acctg Pd refers to the fiscal month and year. You cannot enter a future accounting period.

8 **Budget FY** *(no-entry)*
Leave blank.

9 **Fund** *(no-entry)*
Leave blank.

10 **Action** *(optional default, alpha field; 1 position)*
Key in one of the following:
E = Enters a new document.
M = Modifies a previously accepted document.
X = Cancels an existing document.
If left blank, the system defaults to ***E***.

11 **Trans Type** *(optional, numeric field; 2 positions)*
Key in transaction type which is used to record an expenditure for the payment of goods or services such as contracts, lease agreements, equipment rentals, training, and expenditures against an agreement. For a modification this field is system generated with data inferred from the original document. Therefore, it cannot be modified.

12 **Prompt Pay Type** *(optional default, alpha field; 1 position)*
Key in one of the prompt pay type as follows associated with the voucher. If left blank, the prompt pay type is generated as identified for the vendor in the VEND.
C = Contract Payments
P = Perishable
D = Dairy
M = Meat
N = Pay immediately
O = Other

Header Fields *(cont'd)*

13 **PV Type** *(optional default, numeric field; 1 position)*
Key in the PV type. If left blank, the system defaults to ***1*** (regular pay).

14 **Sched Pymt Date** *(optional default, numeric field; 6 positions)*
Key in the date (*mmddyy*) that you want the payment to be selected by the automated disbursements process. If left blank, the system calculates the schedule payment date.

15 **Descr** *(optional, alphanumeric field; max. of 12 positions)*
Key in notes about the voucher.

16 **D.O.** *(optional default, alphanumeric field; 4 positions)*
Key in the Treasury Disbursing Office that pays this voucher, If left blank, the system defaults to the Treasury Disbursing Office defined in the DOPT.

17 **FA Ind** *(optional, alpha field; 1 position)*
Key in ***Y*** if this payment authorization pertains to a fixed assets acquisition.

18 **Ref Doc #** *(no-entry)*
This field is entered on the line screen.

19 **Accp/Del Date** *(required, numeric field; 6 positions)*
Key in the date (*mmddyy*) the goods or services authorized for payment were accepted/delivered.

20 **Vendor Inv #** *(optional, numeric field; max. of 11 positions)*
Key in the vendor invoice transaction code and document number for the goods or service related to this document.

21 **Inv Date** *(required, numeric field; 6 positions)*
Key in the invoice date (*mmddyy*) from the vendor's invoice for the goods or services related to this document. If the date was incorrect on the original voucher, key in the invoice date from the vendor's invoice.

22 **Log Date** *(required, numeric field; 6 positions)*
Key in the log date for the goods or services related to this document.

23 **FY** *(optional, numeric field; 2 positions)*
Key in the fiscal year if this voucher is supporting a manual schedule that was entered into the system prior to the entry of this document.

24 **Schedule Cat** *(no-entry)*
The system defaults to ***T***, automated tape schedule.

25 **Schedule Typ** *(optional default, alpha field; 1 position)*
Key in one of the following:
T = Indicates a Transportation Treasury Schedule.
M = Indicates a Miscellaneous Treasury Schedule.
If left blank, the system defaults to ***M***.

Header Fields *(cont'd)*

26 **Schedule Number** *(no-entry)*
This field is not used by RD.

---

27 **Payment Cat** *(optional default, alpha field; 1 position)*
Key in one of the following.
V = Vendor
M = Miscellaneous
If left blank, the payment document processors defaults to the field value from the VEND.

---

28 **Offset Eligibility** *(required, alpha field; 1 position)*
Key in one of the following to identifies if a vendor is eligible or ineligible to have their payments offset for outstanding debt.
Y = Yes
N = No

---

29 **Vendor Code** *(required, alphanumeric field; max. of 11 positions)*
Key in the vendor code. It must be the same as the vendor code on the referenced document.

---

30 **Document Total** *(required, numeric field; max. of 15 positions)*
Key in the total of all lines in the document, including contract holdback lines.

---

31 **Name** *(no-entry)*
The system defaults to the name for the specific vendor as referenced on the line screen.

---

32 **Agreement #** *(conditional, numeric field; max. of 15 positions)*
If the accounting event (transaction type) is for a reimbursable agreement and the document is a refund of a collection against a billable agreement, key in the billable agreement number. Otherwise, optional.

---

33 **Address 1, 2, 3** *(no-entry)*
The system defaults to the address for the specific vendor as referenced on the line screen.

---

34 **Holdback Tot** *(conditional, numeric field; max. of 15 positions)*
If contract holdback lines are entered in this document, key in the net of all contract holdback lines in the document.

---

35 **Pmt Sequence #** *(conditional, numeric field; max. of 8 positions)*
If a schedule number is entered or this voucher was submitted to Treasury in a manual SF-1166, key in the number representing the relative position of this voucher to other vouchers in that schedule. Otherwise, leave blank.

---

36 **Int Reason** *(optional default, alpha field; 1 position)*
Key in the code indicating the reason interest was applied to the payment. If left blank, the system default to ***1*** in the DOPT. See the IRCT for valid interest reason codes.

Header Fields *(cont'd)*

37 **Check Type** *(optional, alpha field; 1 position)*
Key in one of the following:
- ***H*** = This payment is to be a hand pick-up. You may only enter **H** in this field if the Vendor Type Category for the Vendor entered in this document is not **N** (outside vendor).
- ***C*** = This payment is to contain a comment card. Used only by Treasury-disbursing agencies.
- ***S*** = This payment is to be held before mailing for additional stuffing. Used only be agencies that print their own checks.
- ***B*** = This payment is to be both stuffed and picked up. Used only by agencies that print their own checks.

---

38 **Agency Head Approval** *(conditional, alpha field; 1 position)*
If the document is subject to prompt payment and is scheduled eight or more days prior to the prompt payment schedule date, key in one of the following:
- ***Y*** = Indicates approved by the agency head.
- ***N*** = Indicates non-approval by the agency head.

Otherwise, leave blank.

---

39 **Disc Lost Reason** *(optional, alphanumeric field; 1 position)*
Key in the discount lost reason code if the discounts associated with this voucher have been lost.

---

40 **Discount %** *(optional, numeric field; max. of 6 positions)*
Key in the percentage of discount in whole percents with 3 decimal places.

---

41 **Amount** *(optional, numeric field; max. of 8 positions)*
Key in the amount of discount for this document. This amount is used to compute the discount percentage and that percentage will apply to all lines.

---

42 **Days** *(conditional, numeric field; 2 positions)*
If either a discount percent or a discount amount is entered, key in the number of the discount is applicable.

---

43 **Comments to Print** *(optional default, alphanumeric field; max. of 40 positions)*
Key in the text to be printed on the face of the check if issued by Treasury. If your agency prints its own checks, the comments will be printed on the check stub. If a comment card is to be used with this check, enter payment text in the VTXT. If left blank, the system checks the DPTX to see if any default text is specified. If so, the system uses the default text, along with the payment voucher number as the default text.

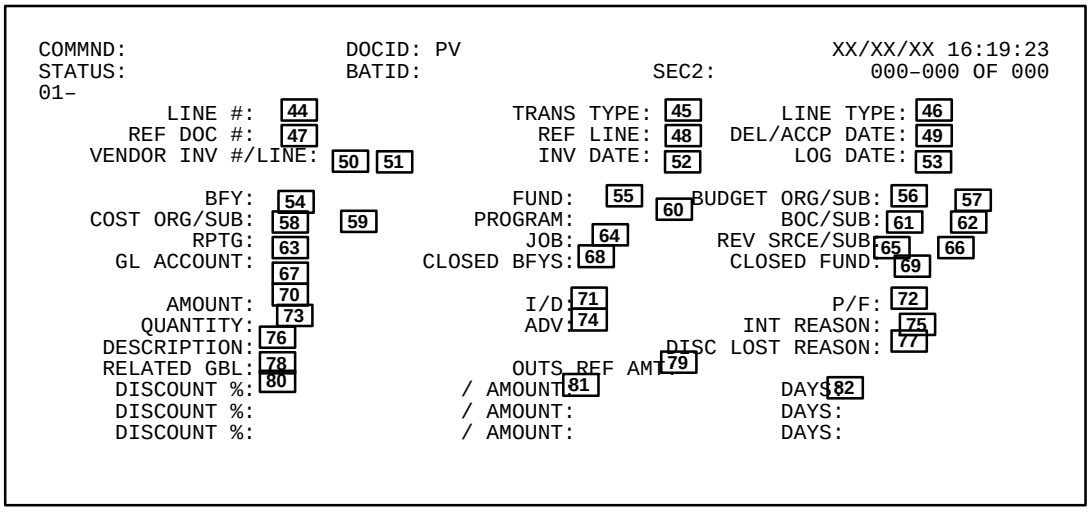

Figure 2. Payment Voucher Document (PV) line fields

Line Fields

Complete the line fields as follows:

44 **Line #** *(required, numeric field; 3 positions)*
Key in the number for each accounting line from ***001*** to ***999***.

---

45 **Trans Type** *(optional default, alphanumeric field; 2 positions)*
Key in the transaction type that defines the appropriate accounting model for this document. If left blank, the system defaults to the transaction type entered in the document header.

---

46 **Line Type** *(conditional, alpha field; 1 position)*
If the line amount refers to a contract holdback amount, or manually computed prompt payment interest amount, or manually computed prompt payment penalty amount associated with prompt payment interest, key in one of the following:

- ***H*** = Indicates a contract holdback line.
- ***I*** = Indicates a manually coded interest line.
- ***P*** = Indicates a manually coded penalty line.
- ***N*** = Indicates a normal payment line.

Otherwise, leave blank. If left blank, the system defaults to ***N***.

---

47 **Ref Doc #** *(required, alphanumeric field; 13 positions)*
Key in the transaction code (e.g., ***RQ, MO***) and the document number of the reference requisition receiver, or order document.

---

48 **Ref Line** *(optional, numeric field; 3 positions)*
Key in the accounting line number of the referenced item (e.g., ***001***).

---

49 **Del/Accp Date** *(conditional, numeric field; 6 positions)*
If the Trigger Date field referenced by the Prompt Pay Type is ***D***, or a receiver is not referenced, or the Accp/Del Date is not entered in the header, key in the date (*mmddyy*) in which the goods authorized for payment were accepted/delivered. Otherwise, leave blank.

Line Fields *(cont'd)*

50 **Vendor Inv #** *(optional default, numeric field; max. of 11 positions)*
Key in the vendor invoice document number for the goods and services related to this document. If left blank, the system defaults to the value entered in the Vendor invoice Number field in the document header if the Vend Inv Line is entered.

51 **Vendor Inv Line** *(optional, numeric field; 3 positions)*
Key in the line number of the line in a vendor invoice you wish to reference.

52 **Inv Date** *(optional, numeric field; 6 positions)*
Key in the invoice date (*mmddyy*) from the vendor's invoice for the goods or services related to this document. If the date was incorrect on the original voucher, key in the invoice date (*mmddyy*) from the vendor's invoice for the goods or services related to this document.

53 **Log Date** *(conditional, numeric field; 6 positions)*
If the Trigger Date field for the Prompt Pay Type is ***I*** and the Log Date (**Field 22**) is not entered in the document header, key in the log date (*mmddyy*) for the goods or services related to the document. Otherwise, leave blank.

54 **BFY** *(no-entry)*
Leave blank. The budget fiscal year is derived from the DVAL.

55 **Fund** *(no-entry)*
Leave blank. The fund code is derived from the DVAL.

56 **Budget Org** *(no-entry)*
Leave blank. The budget organization is derived from the DVAL.

57 **Budget Sub** *(no-entry)*
This field is not used by RD.

58 **Cost Org** *(no-entry)*
This field is not used by RD.

59 **Cost Sub** *(no-entry)*
This field is not used by RD.

60 **Program** *(no-entry)*
This field displays the 9-position ACCS code. It is derived from the ACXT.

61 **BOC** *(no-entry)*
This code is inferred from the reference document.

62 **Sub** *(no-entry)*
This field is not used by RD.

63 **Rptg** *(no-entry)*
Leave blank. The reporting category code is derived from the DVAL and contains the 2-position special purpose code.

Line Fields *(cont'd)*

64 **Job** *(no-entry)*
This field is not used by RD.

65 **Rev Srce** *(no-entry)*
This field is not used by RD.

66 **Sub** *(no-entry)*
This field is not used by RD.

67 **GL Account** *(no-entry)*
This field is not used by RD.

68 **Closed BFYs** *(no-entry)*
Leave blank.

69 **Closed Fund** *(no-entry)*
Leave blank.

70 **Amount** *(required, numeric field; max. of 15 positions)*
Key in the dollar amount of the payments for this line. If this is a modification to a previous line, key in the dollar amount or the amount of change from the previous amount.

71 **I/D** *(optional default, alpha field; 1 position)*
Key in one of the following:
I = Indicates the amount entered is an increase.
D = Indicates the amount entered is a decrease.
The ***D*** entry is also used to record a credit memo. If left blank, the system defaults to ***I***.

72 **P/F** *(conditional, alpha field; 1 position)*
If referencing another document, key in one of the following:
P = Indicates a partial payment.
F = Indicates a final payment.
If the line amount is equal to the outstanding line amount of the referenced document, the system defaults to ***F***.

73 **Quantity** *(optional, numeric field; max. of 9 positions)*
Key in the quantity of goods.

74 **Adv** *(optional, alpha field; 1 position)*
Key in one of the following:
A = Advance refund
N = Customer collection refund

75 **Int Reason** *(conditional, alpha field; 1 position)*
If the Int Reason field (**Field 36**) is left blank in the header, key in the reason code which explains why interest was applied to the line. This code is required if Line Type is ***I*** or ***P***. See the IRCT for valid interest reason codes. Otherwise, leave blank.

Line Fields *(cont'd)*

76 **Description** *(optional, alphanumeric field; max. of 30 positions)*
Key in any notes about the line.

77 **Disc Lost Reason** *(conditional, alpha field; 1 position)*
If there are discount terms either entered in the voucher or inferred from the Obligation and/or the vendor invoice documents and the discount is considered lost, key in the reason code which explains why the discount appropriate for the line was lost. If left blank, the system defaults to the discount lost reason code entered in the document header or from the DOPT.

78 **Related GBL** *(optional, alphanumeric field; max. of 11 positions)*
Key in the document ID of the obligation document that was used to obligate freight charges, if any, related to this document.

79 **Outs Ref Amt** *(no-entry)*
When a document is quick-edited, the outstanding reference document amount is system generated.

80 **Discount %** *(conditional, numeric field; max. of 6 positions)*
If a discount amount is entered, the discount % is not allowed. Key in the percentage of discount in whole percents with 3 decimal places.

81 **Amount** *(conditional, numeric field; max. of 8 positions)*
If a discount % is entered, the discount amount is not allowed. Key in the amount of discount for the document.

82 **Days** *(conditional, numeric field; 2 positions)*
If either a discount percent or a discount amount is entered, key in the number of days the discount is applicable.

Processing Instructions

After keying in the data, press [Home] to place the cursor in the Command field. Key in ***E*** (edit) in the Command field to edit the data entered. Press [Enter]. If errors are detected, follow the Error Message Research Instructions. If no errors are detected, key in ***R*** (run) in the Command field to process the data. Press [Enter]. The status of the document is displayed.

Error Message Research Instructions

- Use the down arrow key to move to the error message and press [Enter]. The ERRG is displayed.
- Read the error explanation and follow any instructions provided.
- To return to the document, key in ***E*** in the Action field at any table screen.

Note: To override an error message, key in ***O*** in the Command field and press [Enter]

Note: For more detailed information on the PV, see **Part 4**, **Spending**, in the manual.

Requisition Document (RQ)

The RQ (see Figures 1 and 2) **is used to:**

- Record a commitment and to enter service or supply requests.
- Enter accounting information related to a requisition.
- Enter descriptive information about the requisition, such as delivery location, delivery date, and requestor's name.

The RQ updates the following tables:

- Requisition Header Inquiry and Requisition Accounting Line Inquiry Tables (REQH, REQL)
- Budget Execution tables (ALOC, ALLT, SASP)
- General Ledger Balance Inquiry Table (GLBL)
- Document Cross-Reference Inquiry Table (DXRF)

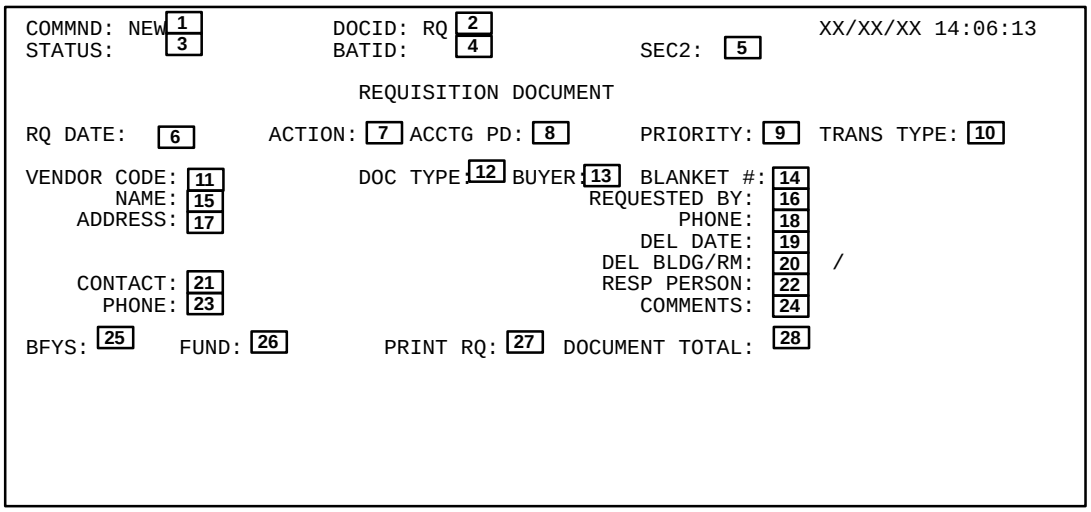

Figure 1.Requisition Document (RQ) header fields

Command Fields

Complete the command fields as follows:

1 **Commnd** *(conditional, alpha field; 3 positions)*

New is system generated. If entering a new document or if the document has been archived, tab to the next field. If changing a document currently residing in the Document Suspense File, key in ***Get***.

2 **DocID** *(required, alphanumeric field; max. of 15 positions)*

The document identifier consists of 3 fields: At the system-generated transaction code (***RQ***), press [Tab]. Key in the sec1 code (i.e., the 2 position division code), and press [Tab]. Key in the Org Code (5 positions). Press [#], then press [Enter]. Sequential numbers are generated in positons 10-15.

3 **Status** *(no-entry)*

After the document is processed, this field displays the current status of a document.

Command Fields *(cont'd)*

4 **BatID** *(conditional, alphanumeric field; max. of 12 positions)*

If you are adding a document, leave blank. If you are modifying or cancelling, key in the transactions code (***RQ***), the sec1 code and the batch number (*max. of 6 positions*).

---

5 **Sec2** *(no-entry)*

The system generates the security code that is inferred from your user ID to verify your authority to create the document. This data is not displayed.

Press [Enter] and the screen is ready for data entry.

Header Fields

Complete the header fields as follows:

6 **RQ Date** *(optional default, numeric field; 6 positions)*

Key in the date (*mmddyy*) of the document, usually the current date. It cannot be a future date. If left blank, the system defaults to the date the RQ is accepted by the system.

---

7 **Action** *(optional default, alpha field; 1 position)*

Key in one of the following:

E = Adds a new document.
M = Modifies/cancels line amounts on a previous document or add a new line.
X = Cancels an existing document if it does not reference a subsequent document. If left blank, the system defaults to ***E***.

---

8 **Acctg Pd** *(optional default, numeric field; 4 positions)*

Key in the open accounting period date (*mmyy*). If left blank, the system defaults to the accounting period inferred from the document date in the CLDT, but it is not displayed. The Acctg Pd refers to the fiscal month and year. You can enter a future accounting period.

---

9 **Priority** *(optional default, numeric field; 2 positions)*

Key in your priority for processing this requisition. If left blank, the system defaults to ***99***.

---

10 **Trans Type** *(required, numeric field; 2 positions)*

Key in transaction type ***01*** which defines the appropriate accounting posting model for the document.

---

11 **Vendor Code** *(required, alphanumeric field; max. of 11 positions)*

Key in the vendor code for whom this requisition is placed. See the VEND for valid vendor codes.

---

12 **Doc Type** *(conditional, alpha field; 1 position)*

If this commitment is placed against a blanket agreement, key in ***B***. Otherwise, optional.

---

13 **Buyer** *(optional, alphanumeric field; 2 positions)*

Key in the code of the buyer who is processing this requisition.

Header Fields *(cont'd)*

14 **Blanket#** *(conditional, numeric field; max. of 11 positions)*
If the Doc Type (**Field 12**) is ***B***, indicating that this requisition is made against a blanket agreement, key in the number of the blanket agreement between the Government and the vendor which governs the terms of this requisition.

15 **Name** *(conditional, alphanumeric field; max. of 30 positions)*
If the vendor code identifying the vendor is not in the VEND and the Vendor Code (**Field 11**) is blank or this is a miscellaneous (one-time) vendor or trial supplier, key in the vendor's name. Otherwise, the name is inferred from the VEND.

16 **Requested By** *(optional, alphanumeric field; max. of 20 positions)*
Key in the name of the person requesting the goods or services.

17 **Address** *(conditional, alphanumeric field; max. of 30 positions)*
If the vendor code that identifies this vendor is not in the VEND and the Vendor Code (**Field 11**) is blank or this is a miscellaneous (one-time) vendor or trial supplier, key in the vendor's address. Otherwise, the address is inferred from the VEND.

18 **Phone** *(optional, numeric field; max. of 12 positions)*
Key in the requestor's telephone number, including the area code. Dashes may be entered.

19 **Del Date** *(optional, numeric field; 6 positions)*
Key in the date (*mmddyy*) the goods must be delivered.

20 **Del Bldg/Rm** *(optional, alphanumeric field; max. of 10 positions)*
Key in the building and room where the goods are to be delivered. See the SHIP for valid entries.

21 **Contact** *(conditional, alphanumeric field; max. of 30 positions)*
If the vendor code represents a miscellaneous (one–time) vendor, key in the name of the person who may be contacted at the delivery point. Otherwise, the contact in inferred from the VEND.

22 **Resp Person** *(optional, alphanumeric field; max. of 18 positions)*
Key in the name of the person who may be contacted regarding the requisition.

23 **Phone** *(optional default, numeric field; max. of 12 positions)*
Key in the vendor's telephone number, including the area code. Dashes may be entered. If left blank, the system defaults to the telephone number in the VEND.

24 **Comments** *(optional, alphanumeric field; max. of 12 positions)*
Key in any information identifying the requisition.

25 **BFYs** *(no-entry)*
Leave this field blank.

26 **Fund** *(no-entry)*
Leave this field blank.

Header Fields *(cont'd)*

27 **Print RQ** *(optional default, alpha field; 1 position)*

Key in ***Y*** to print this requisition or ***N*** not to print this requisition. If left blank, the system defaults to the value in the Print field in the TCAT.

28 **Document Total** *(required, numeric field; max. of 15 positions)*

Key in the total net amount of all accounting lines for this requisition. If a modification, key in the total amount of the transaction, not the total amount of the existing requisition.

```
COMMND:                  DOCID: RQ                                XX/XX/XX 14:09:10
STATUS:                  BATID:                    SEC2:              000-000 OF 000
01-
             LINE: 29          BUDGET FYS: 30            FUND: 31
       BUDGET ORG: 32            COST ORG: 33         PROGRAM: 34
              BOC: 35              JOB NO: 36            RPTG: 37
           AMOUNT: 38                 I/D: 39
      DESCRIPTION: 40
02-
             LINE:             BUDGET FYS:                FUND:
       BUDGET ORG:               COST ORG:             PROGRAM:
              BOC:                 JOB NO:                RPTG:
           AMOUNT:                    I/D:
      DESCRIPTION:
03-
             LINE:             BUDGET FYS:                FUND:
       BUDGET ORG:               COST ORG:             PROGRAM:
              BOC:                 JOB NO:                RPTG:
           AMOUNT:                    I/D:
      DESCRIPTION:
```

Figure 2. Requisition Document (RQ) line fields

Line Fields

Complete the line fields as follows:

29 **Line** *(required, numeric field; 3 positions)*

Key in the line number for each accounting line from ***001*** to ***999***.

30 **Budget FYs** *(no-entry)*

Leave this field blank. The budget fiscal year is derived from the DVAL.

31 **Fund** *(no-entry)*

Leave this field blank. The fund is derived from the DVAL.

32 **Budget Org** *(no-entry)*

Leave this field blank. The budget organization is derived from the DVAL.

33 **Cost Org** *(no-entry)*

Leave this field blank. This field is not used by RD.

34 **Program** *(required, alphanumeric field; max. of 9 positions)*

Key in the 9-position ACCS code. See the PGMT for code verification.

Line Fields *(cont'd)*

35 **BOC** *(required, numeric field; 4 positions)*

Key in the budget object classification code. See the BOCT for valid codes. A BOC cannot be changed for an existing line.

36 **Job No** *(no-entry)*

This field is not used by RD.

37 **Rptg** *(no-entry)*

Leave blank. The reporting category is derived from the DVAL and contains the 2-position special purpose code.

38 **Amount** *(required, numeric field; max. of 15 positions)*

Key in the line amount. The amount should be entered in dollars and cents (e.g., 13.50).

39 **I/D** *(optional default, alpha field; 1 position)*

If this is a modification to a previously accepted document, key in one of the following:
I = Indicates the amount entered is an increase.
D = Indicates the amount entered is a decrease.
If left blank, the system defaults to ***I***.

40 **Description** *(optional, alphanumeric field; max. of 30 positions)*

Key in any information to identify this line amount.

Processing Instructions

After keying in the data, press [Home] to place the cursor in the Command field. Key in ***E*** (edit) in the Command field to edit the data entered. Press [Enter]. If errors are detected, follow the Error Message Research Instructions. If no errors are detected, key in ***R*** (run) in the Command field to process the data. Press [Enter]. The status of the document is displayed.

Error Message Research Instructions

- Use the down arrow key to move to the error message and press [Enter]. The ERRG is displayed.
- Read the error explanation and follow any instructions provided.
- To return to the document, key in ***E*** in the Action field at any table screen.

Note: To override an error message, key in ***O*** in the Command field and press [Enter]

Note: For more detailed information on the RQ, see **Part 4**, **Spending**, in the manual.

Suballotment Document (SA)

The SA (see Figure) **is used to:**

- Distribute funds to Organization Levels 2, 3, 4, by BOC rollup code for headquarters and level 2 by BOC rollup code for state offices.

The SA updates the following tables:

- Suballotment Spending Control Inquiry Table (SASP)
- Suballotment Structure Inquiry Table (SAST)
- Suballotment Forward Reference Inquiry Table (SAFR)
- Allotment Inquiry Table (ALLT)
- Allotment Status Inquiry Table (ALST)
- Suballotment Inquiry Table (SAIN)
- General Ledger Balance Inquiry Table (GLBL)

```
COMMND: [1]              DOCID: SA [2]                          XX/XX/XX 07:36:25
STATUS: [3]              BATID: [4]                SEC2: [5]       000-000 OF 000
H-
                                SUBALLOTMENT DOCUMENT

    TRANS DATE: [6]          ACCTG PD: [7]     TR TYPE: [8]
    FUND: [9]     BUDGET FYS: [10]    TOT REV SUBALLOT AMT: [11]
        EST REIM TRANS TYPE: [12]   TOT REV SUBALLOT FTES: [13]
              BUDG                                                    SPN
    ACT  LVL  TYPE  DIV     ORG    REF ORG   PROGRAM   BOC   OVR
    ___  ___  ____  ____  _______  _______  _________  ____  ___
01- [14] [15]  [16]  [17]  [18]     [19]      [20]      [21]  [22]
              DESCRIPTION:[23]
                                  SUBALLOT        SUBALLOT        FTE
    QTR    SUBALLOT AMT       INC/DEC AMT         FTES         INC/DEC
    ---   ---------------  ---------------  -------------  -------------
     1        [24]              [25]           [26]           [27]
     2
     3
     4
    EST REIM TT: [28] REVISED AMT - INC/DEC AMT:   [29]          [30]
```

Figure. Suballotment Document (SA)

Command Fields

Complete the command fields as follows:

[1] **Commnd** *(no-entry)*

New is system generated. Press [Tab].

---

[2] **DocID** *(required, alphanumeric field; max. of 15 positions)*

The document identifier consists of 3 fields: At the system-generated transaction code (***SA***), press [Tab]. Key in the sec1 code (i.e., the 2 position division code) and press [Tab]. Key in the Org Code (5-positions). Press [#], then press [Enter]. Sequential numbers are generated in positions 10–15.

---

[3] **Status** *(no-entry)*

After the document is processed, this field displays the current status of a document.

---

[4] **BatID** (*no-entry)*

This field is not used for this document.

Command Fields *(cont'd)*

5 **Sec2** *(no-entry)*

The system generates the security code that is inferred from your user ID to verify your authority to create this document. This data is not displayed.

Press [Enter] and the screen is ready for data entry.

Header Fields

Complete the header fields as follows:

6 **Trans Date** *(optional default, numeric field; 6 positions)*

Key in the date *(mmddyy)* of the document, usually the current date. It cannot be a future date. If left blank, the system defaults to the date the document is accepted by th system.

---

7 **Acctg Pd** *(optional default, numeric field; 4 positions)*

Key in the open accounting period date *(mmyy)*. If left blank, the system defaults to the accounting period inferred from the document date in the CLDT, but it is not displayed.

---

8 **Tr Type** *(required, numeric field; 2 positions)*

Key in the transaction type ***01*** which defines the appropriate accounting posting model for the SA.

---

9 **Fund** *(required, alphanumeric field; max. of 3 positions)*

Key in the fund code. See the FUND for valid fund codes.

---

10 **Budget FYs** *(required, numeric field; 2 positions)*

Key in the last 2 digits of the budget fiscal year. See the FSYR for valid fiscal years.

---

11 **Tot Rev Suballot Amt** *(no-entry)*

Leave blank.

---

12 **Est Reim Trans Type** *(no-entry)*

Leave blank.

---

13 **Tot Rev Suballot FTEs** *(no-entry)*

This field is not used for RD.

Line Fields

Complete the line fields as follows:

14 **Act** *(required, alpha field; 1 position)*

Key in one of the following:

A = Adds or reactivates.
C = Changes an existing authority.
D = Deactivates

Line Fields *(cont'd)*

15 **Lvl** *(required, numeric field; 2 positions)*

Key in the level for the suballotment. The level must reference an allotment. For states, always enter ***1*** because states only have 1 suballotment level which corresponds to their organization level 2. For headquarters organization, the suballotment level can be 1, 2, or 3 based on organization level 2, 3, or 4, respectively. The suballotment level numeric value for headquarters organizations is always the organization level for the organization receiving the suballotment (**Field 18**) minus 1.

16 **Budg Type** *(required, alpha field; 1 position)*

Key in ***D*** for dollars suballocated.

17 **Div** *(required, alphanumeric field; 2 positions)*

Key in the division code. See the DVSN for valid division codes.

18 **Org** *(required, alphanumeric field; 5 positions)*

Key in the organization receiving the suballotment. The Org must always be 1 level below the level making the suballotment (**Field 19**). See the ORGN for valid organization codes.

19 **Ref Org** *(required, alphanumeric field; 5 positions)*

Key in the organization that is making the suballotment. The Ref Org must always be 1 level above the Org (**Field 18**) receiving the suballotment. See the ORGN for valid organization codes.

20 **Program** *(no-entry)*

Leave blank.

21 **BOC** *(required, numeric field; 4 positions)*

Key in the BOC rollup code.

22 **Spn Ovr** *(no-entry)*

This field is not used by RD.

23 **Description** *(optional, alphanumeric field; max. of 30 positions)*

Key in Org (**Field 18**) and BOC (**Field 21**) titles.

24 **Suballot Amt (1, 2, 3, 4)** *(no-entry)*

Leave blank.

25 **Suballot Inc/Dec Amt (1, 2, 3, 4)** *(required, numeric field; max. of 15 positions)*

Key in the amount (use decimal). If changing a suballotment amount, key in the increase or decrease amount (use decimal). If **Field 24** is entered, the Inc/Dec amount should reflect the signed difference between the old and new amount.

26 **Suballot FTEs (1, 2, 3, 4)** *(no-entry)*

This field is not used by RD.

27 **FTE Inc/Dec (1, 2, 3, 4)** *(no-entry)*

This field is not used by RD.

Line Fields *(cont'd)*

The following data elements are relevant for estimated reimbursements in addition to appropriated funds.

28 **Est Reim (TT)** *(no-entry)*

This field is not used by RD.

29 **Est Reim (Revised Amt)** *(no-entry)*

This field is not used by RD.

30 **Est Reim (Inc/Dec Amt)** *(no-entry)*

This field is not used by RD.

Processing Instructions

After keying in the data, press [Home] to place the cursor in the Command field. Key in ***E*** (edit) in the Command field to edit the data entered. Press [Enter]. If errors are detected, follow the Error Message Research Instructions. If no errors are detected, key in ***R*** (run) in the Command field to process the data. Press [Enter]. The status of the document is displayed.

Error Message Research Instructions

- Use the down arrow key to move to the error message and press [Enter]. The ERRG is displayed.
- Read the error explanation and follow any instructions provided.
- To return to the document, key in ***E*** in the Action field at any table screen.

Note: To override an error message, key in ***O*** in the Command field and press [Enter]

Note: For more detailed information on the SA, see **Part 3**, **Budget And Funds Control**, in the manual.

Standard Voucher Document (SV)

The SV (see Figures 1 and 2) **is used to:**

- Record changes to the accounting distribution codes previously entered in a revenue or spending document.
- Record nonstandard accruals, period-end adjusting entries, and balance sheet transfers.
- Record accounting transactions that occur regularly (e.g., expensing a prepaid item, recording monthly accruals).
- Expense previously recorded expenditures.
- Modify closed documents.
- Post payroll expenditures.

The SV updates the following tables:

- Journal Voucher and Standard Journal Inquiry Table (JVLT)
- Budget Execution tables (ALOC, ALLT, SASP)
- Document Cross Reference Inquiry Table (DXRF)

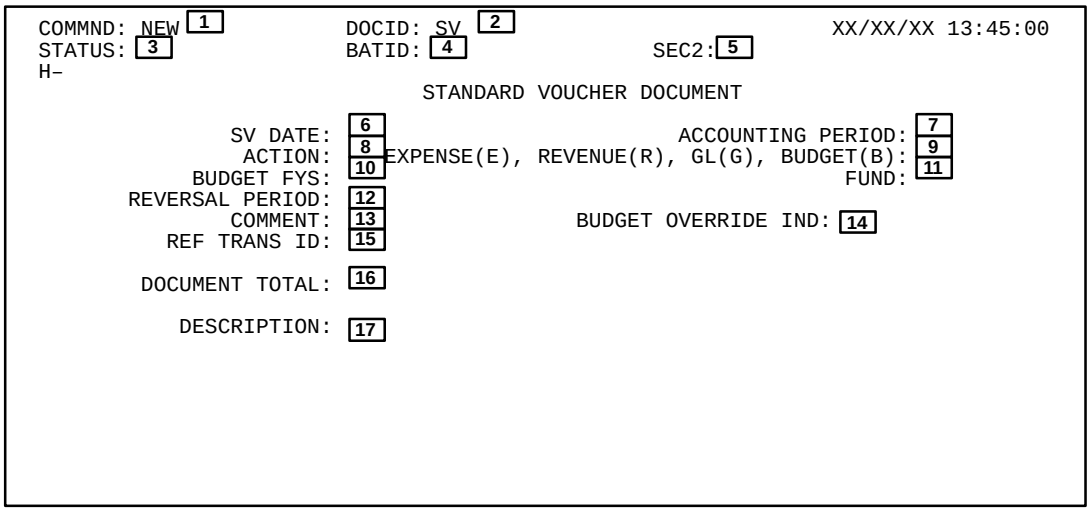

Figure 1. Standard Voucher Document (SV) header fields

Command Fields

Complete the command fields as follows:

1 **Commnd** *(conditional, alpha field; 3 positions)*

New is system generated. If entering a new document or if the document has been archived, tab to the next field. If changing a document currently residing in the Document Suspense File, key in ***Get***.

2 **DocID** *(required, alphanumeric field; max. of 15 positions)*

The document identifier consists of 3 fields: At the system-generated transaction code (***SV***), press [Tab]. Key in the sec1 code (i.e., the 2 position division code) and press [Tab]. Key in the Org Code (5-positions). Press [#], then press [Enter]. Sequential numbers are generated in positions 10–15.

3 **Status** *(no-entry)*

After the document is processed, this field displays the current status of a document.

Command Fields *(cont'd)*

4 **BatID** (*conditional, alphanumeric field; max. of 12 positions)*

If you are adding a document, leave blank. If you are modifying, key in the transactions code (***SV***), the sec1 code and the batch number (*max. of 6 positions*).

5 **Sec2** *(no-entry)*

The system generates the security code that is inferred from your user ID to verify your authority to create this document. This data is not displayed.

Press [Enter] and the screen is ready for data entry.

Header Fields

Complete the header fields as follows:

6 **SV Date** *(optional default, numeric field; 6 positions)*

Key in the date (*mmddyy*) of the document. If left blank, the system defaults to the date the SV is accepted by the system.

7 **Accounting Period** *(optional default, numeric field; 4 positions)*

Key in the open accounting period date (*mmyy).* If left blank, the system defaults to the accounting period inferred from the document data in the CLDT, but it is not displayed.

8 **Action** *(required, alpha field; 1 position)*

Key in one of the following action codes:
E = Enters a new document.
M = Modifies a previously accepted document.

9 **Expense (E), Revenue (R), GL (G), Budget (B)** *(optional, alpha field; 1 position)*

Key in one of the following:
E = Indicates an expense adjustment.
R = Indicates a revenue adjustment.
G = Indicates a General Ledger transfer.
B = Indicates a budget transfer.

10 **Budget FYs** *(optional default, numeric field; 2 positions)*

Key in the last 2 digits of the fiscal year to which this document applies. If left blank, the system defaults to the budget fiscal year inferred from the SV date.

11 **Fund** *(optional, alphanumeric field; max. of 3 positions)*

Key in the fund code for all lines in this document.

12 **Reversal Period** *(conditional, numeric field; 4 positions)*

If this SV should be automatically reversed, key in the accounting period in which the reversal should take place (i.e., fiscal month and year). Otherwise, leave blank.

13 **Comments** *(optional, alphanumeric field; max. of 12 position*s)

Key in any notes about this document.

Header Fields *(cont'd)*

14 **Budget Override Ind** *(optional default, alpha field; 1 position)*

Key in ***Y*** or ***N***. If left blank, the system defaults to ***N.***

---

15 **Ref Trans ID** *(conditional, numeric field; max. of 13 positions)*

If this document relates to another document, key in the reference transaction code and document number.

---

16 **Document Total** *(required, numeric field; max. of 15 positions)*

Key in the unsigned amount of all lines in the document. Compute the difference between the total increased amounts and the total decreased amounts.

---

17 **Description** *(optional, alphanumeric field; max. of 30 positions)*

Key in the description to be used as the default line description for all lines in this document where no line descriptions entered.

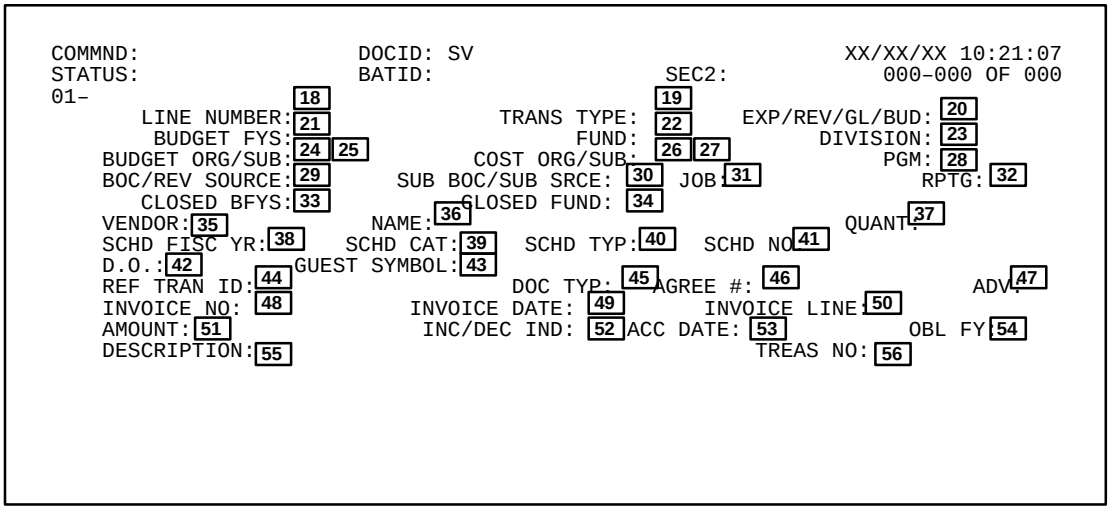

Figure 2. Standard Voucher Document (SV) line fields

Line Fields

Complete the line fields as follows:

18 **Line Number** *(required, numeric field; 3 positions)*

Key in a different number for each line (i.e., ***001*** to ***999*)**.

---

19 **Trans Type** *(required, alphanumeric field; 2 positions)*

Key in the transaction type that describes the accounting event that should be recorded for this document line.

---

20 **Exp/Rev/Gl/Bud** (*conditional, alpha field; 1 position*)

If different from **Field 9**, key in one of the following codes associated with this line. Otherwise, optional.

E = Indicates an expense.
R = Indicates a revenue.
G = Indicates a General Ledger transfer.
B = Indicates a budget transfer.

Line Fields *(cont'd)*

21 **Budget FYs** *(no-entry)*
Leave blank. The budget fiscal year is derived from the DVAL.

22 **Fund** *(no-entry)*
Leave blank. The fund code is derived from the DVAL.

23 **Division** *(no-entry)*
Leave blank. The division code is derived from the DVAL.

24 **Budget Org** *(no-entry)*
Leave blank. The budget organization code is derived from the DVAL.

25 **Budget Sub** *(no-entry)*
This field is not used by RD.

26 **Cost Org** *(no-entry)*
Leave blank. The cost organization code is derived from the DVAL.

27 **Cost Sub** *(no-entry)*
This field is not used by RD.

28 **Pgm** *(required, alphanumeric field; 9 positions)*
Key in the 9-position ACCS code.

29 **BOC/Rev Source** *(conditional, numeric field; 4 positions)*
If required by account type, key in the budget object code or revenue source appropriate for the document.

30 **Sub BOC/Sub Srce** *(no-entry)*
This field is not used by RD.

31 **Job** *(no-entry)*
This field is not used by RD.

32 **Rptg** *(no-entry)*
The reporting category is derived from the DVAL and contains the 2-position special purpose code.

33 **Closed BFYs** *(no-entry)*
Leave blank.

34 **Closed Fund** *(no-entry)*
Leave blank.

35 **Vendor** *(optional, numeric field; max. of 11 positions)*
Key in the code of the vendor appropriate for the document. See the VEND for valid vendor codes.

Line Fields *(cont'd)*

36 **Name** *(conditional, alphanumeric field; max. of 30 positions)*

If a vendor code is not specified, key in the vendor's name. Otherwise, optional.

37 **Quant** *(optional, numeric field; max. of 9 positions)*

Key in the number of hours if this is a payroll adjustment.

38 **Schd Fisc Yr** *(optional, numeric field; 2 positions)*

Key in the fiscal year associated with the payment. It is entered only if a schedule number was entered for Treasury disbursing agencies.

39 **Schd Cat** *(optional, alpha field; 1 position)*

Key in the payment method used for disbursement of this payment document. It is entered only if a schedule number was entered for Treasury–disbursing agencies. Valid values are:

T = Automated Tape Schedule
M = Manual SF–1166
A = ACH Tape
S = TFCS SF–1166

40 **Schd Typ** *(optional, alpha field; 1 position)*

Key in the voucher schedule type, either ***M*** (Miscellaneous) or ***T*** (Transportation).

41 **Schd No** *(optional, numeric field; max. of 9 positions)*

Key in the agency schedule for the document being entered.

42 **D. O.** *(optional, alphanumeric field; 4 positions)*

Key in the disbursing office for the line being entered.

43 **Guest Symbol** *(optional, alphanumeric field; max. of 15 positions)*

Key in the other fund's Treasury symbol for those lines that impact interfund transfers.

44 **Ref Tran ID** *(conditional, numeric field; max. of 16 positions)*

If this document relates to another document, key in the reference document. If a Ref Tran ID is entered in the header, key in only the reference document line number. If left blank, the system defaults to the value entered in the header.

45 **Doc Typ** *(optional, alphanumeric field; 1 position)*

Key in the document type associated with the reference document.

46 **Agree #** *(conditional, numeric field; max. of 15 positions)*

If the accounting event is for a reimbursable agreement, key in the agreement number. Otherwise, optional.

47 **Adv** *(conditional, alpha field; 1 position)*

If the Agree # (**Field 46**) is entered and the SOPT is set to ***Y***, key in one of the following advance indicator.

A = Indicates advance.
U = Indicates advance used.
N = Indicates otherwise.

Line Fields *(cont'd)*

48 **Invoice No** *(conditional, numeric field; max. of 20 positions)*

If this document references a vendor invoice, key in the invoice number. Otherwise, leave blank.

---

49 **Invoice Date** *(conditional, numeric field; 6 positions)*

If this document references a vendor invoice, key in the invoice date (*mmddyy)*. Otherwise, leave blank.

---

50 **Invoice Line** *(conditional, numeric field; 3 positions)*

If this document references a vendor invoice, key in the invoice line number. Otherwise, leave blank.

---

51 **Amount** *(required, numeric field; max. of 15 positions)*

Key in the dollar amount of the item described in the line. If this is a modification of a previous line, key in the amount of the change. The Inc/Dec field indicates whether this is to be added or subtracted from the original amount.

---

52 **Inc/Dec Ind** *(conditional, alpha field; 1 position)*

If making an adjustment, key in one of the following indicators:
I = Indicates the amount entered is an increase.
D = Indicates the amount entered is a decrease.
If left blank, the system defaults to **I**.

---

53 **Acc Date** *(conditional, numeric field; 6 positions)*

If the accomplished Date Required flag in the Disbursing Options Reference Table (DOPT) is ***Y***, key in the accomplished date for the document being entered. Otherwise, optional.

---

54 **Obl FY** *(conditional, numeric field; 2 positions)*

If this document is recovering funds from a previous year, key in the year the obligation was incurred. Otherwise, optional.

---

55 **Description** *(optional, alphanumeric field; max. of 30 positions)*

Key in a description.

---

56 **Treas No** *(optional, numeric field; max. of 11 positions)*

Key in the Treasury document number for the document being entered. This should be the pre-printed SF-1166 number or the SIBAC number.

Processing Instructions

After keying in the data, press [Home] to place the cursor in the Command field. Key in ***E*** (edit) in the Command field to edit the data entered. Press [Enter]. If errors are detected, follow the Error Message Research Instructions. If no errors are detected, key in ***R*** (run) in the Command field to process the data. Press [Enter]. The status of the document is displayed.

Error Message Research Instructions

- Use the down arrow key to move to the error message and press [Enter]. The ERRG is displayed.
- Read the error explanation and follow any instructions provided.
- To return to the document, key in ***E*** in the Action field at any table screen.

Note: To override an error message, key in ***O*** in the Command field and press [Enter]

Note: For more detailed information on the SV, see **Part 6**, **General Ledger**, in the manual.

Training Order Document (TG)

The TG (see Figures 1 and 2) **is used to:**

- Record obligations prior to services being rendered or the receipt of the goods.
- Record training-specific elements such as start and completion dates, course code, and training code.

The TG updates the following tables:

- Training Order Header Inquiry Table (TROH)
- Orders Header Inquiry and Purchase Order Accounting Lines Inquiry Tables (OBLH, OBLL)
- Requisition Header and Line Inquiry Tables (REQH, REQL)
- Budget Execution tables (ALOC, ALLT, SASP)
- General Ledger Balance Inquiry Table (GLBL)
- Document Cross-Reference Inquiry Tables (DXRF)

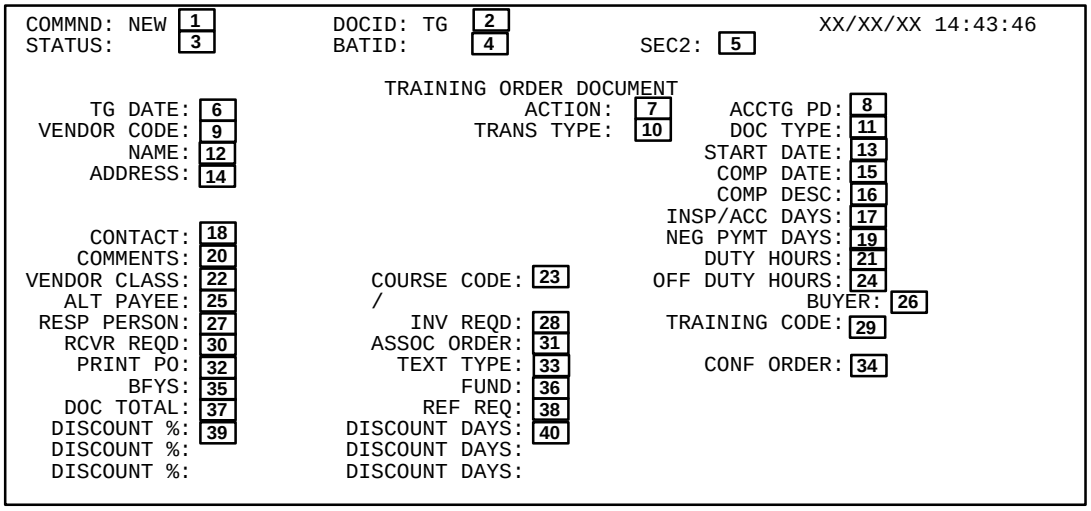

Figure 1. Training Order Document (TG) header fields

Command Fields

Complete the command fields as follows:

1 **Commnd** *(conditional, alpha field; 3 positions)*

New is system generated. If entering a new document or if the document has been archived, tab to the next field. If changing a document currently residing in the Document Suspense File, key in ***Get***.

---

2 **DocID** *(required, alphanumeric fields; max. of 15 positions)*

The document identifier consists of 3 fields: At the system-generated transaction code (***TG***), press [Tab]. Key in the sec1 code (i.e., the 2 position division code), and press [Tab]. Key in the Org Code (5 positions). Press [#], then press [Enter]. Sequential numbers are generated in positions 10-15.

---

3 **Status** *(no-entry)*

After the document is processed, this field displays the current status of a batch or a document.

Command Fields *(cont'd)*

4 **BatID** *(conditional, alphanumeric field; 12 positions)*

If you are adding a document, leave blank. If you are modifying or cancelling, key in the transaction code (***TG***), a sec1 code, and a batch number (*max. of 6 positions*).

5 **Sec2** *(no-entry)*

The system generates the security code that is inferred from your user ID to verify your authority to create the document. This data is not displayed.

Press [Enter]. The screen is ready for data entry.

Header Fields

Complete the header fields as follows:

6 **TG Date** *(optional default, numeric field; 6 positions)*

Key in the date (*mmddyy*) of the document, usually the current date. It cannot be a future date. If left blank, the system defaults to the date the document is accepted.

7 **Action** *(optional default, alpha field; 1 position)*

Key in one of the following:

- ***E*** = Adds a new document
- ***M*** = Modifies a previously accepted document
- ***X*** = Cancels an existing document

If left blank, the system defaults to ***E***.

8 **Acctg Pd** *(conditional, numeric field; 4 positions)*

If the Acctg Period Reqd field is ***Y*** in the TCAT, key in the open accounting period date (*mmyy*). If left blank, the system defaults to the accounting period inferred from the document date in the CLDT.

9 **Vendor Code** *(conditional, alphanumeric field; max. of 11 positions)*

If the Vendor Reqd On Spend Doc field in the SOPT is ***Y***, key in the vendor code. Otherwise, leave blank. See the VEND for valid vendor codes.

10 **Trans Type** *(required, numeric field; 2 positions)*

Key in the transaction type that defines the accounting posting model for the document. See the ACED for valid transaction types.

11 **Doc Type** *(optional, alphanumeric field; 1 position)*

Key in a document type, other than ***B***, used to define various types of purchase orders.

12 **Name** *(no-entry)*

The name is inferred from the VEND.

13 **Start Date** *(optional, numeric field; 6 positions)*

Key in the start date (*mmddyy*) of the service/contract.

Header Fields *(cont'd)*

14 **Address** *(no-entry)*

The address is inferred from the VEND.

---

15 **Comp Date** *(optional, numeric field; 6 positions)*

Key in the completion date (*mmddyy*) of the service/contract.

---

16 **Comp Desc** *(conditional, alphanumeric field; max. of 12 positions)*

If there is no specific calendar end date, e.g., ***when done***, key in a description of the completion date.

---

17 **Insp/Acc Days** *(optional default, numeric field; max. of 2 positions)*

Key in the number of days between delivery and acceptance that were negotiated as acceptable for the order. If left blank, the system defaults to ***0***.

---

18 **Contact** *(optional default, alphanumeric field; max. of 30 positions)*

Key in the name of the vendor's representative. If left blank, the system defaults to the vendor contact in the VEND.

---

19 **Neg Pymt Days** *(optional default, numeric field; max. of 2 positions)*

Key in the payment terms negotiated for payment of the order after receipt of the invoice. If left blank, the system defaults to ***0***.

---

20 **Comments** *(optional, alphanumeric field; max. of 12 positions)*

Key in any notes about the order.

---

21 **Duty Hours** *(optional, numeric field; max. of 4 positions)*

Key in the duty hours associated with the training.

---

22 **Vendor Class** *(optional, alphanumeric field; max. of 5 positions)*

Key in the vendor classification code.

---

23 **Course Code** *(optional, alphanumeric field; max. of 8 positions)*

Key in the course code or catalog number.

---

24 **Off Duty Hours** *(optional, numeric field; max. of 4 positions)*

Key in the non-duty hours associated with the training.

---

25 **Alt Payee** *(optional, alphanumeric field; max. of 11 positions)*

Key in the vendor code used as an alternate payee. See the VEND for valid codes.

---

26 **Buyer** *(optional, alphanumeric field; 2 positions)*

Key in the buyer code processing the order. See the BUYT for valid codes.

---

27 **Resp Person** *(optional, alphanumeric field; max. of 15 positions)*

Key in the name of the person who may be contacted regarding the order.

Header Fields *(cont'd)*

28 **Inv Reqd** *(optional default, alpha field; 1 position)*

Key in one of the following:

Y = Indicates that payments against the order cannot exceed the dollar value of goods received and accepted (within tolerances)

N =Disables the edit

If left blank, the system defaults to the value of the Invoice Required field in the SOPT.

---

29 **Training Code** *(optional, alphanumeric field; max. of 8 positions)*

Key in the code associated with the training.

---

30 **Recv Reqd** *(optional default, alpha field; 1 position)*

Key in one of the following:

Y = Indicates that payments against the order cannot exceed the dollar value of good received and accepted (within tolerances)

N = Disables the edit

If left blank, the system defaults to the value of the Receiver Required field in the SOPT.

---

31 **Assoc Order** *(optional, alphanumeric field; max. of 13 positions)*

Key in the transaction code and document number of an associated order.

---

32 **Print PO** *(optional default, alpha field; 1 position)*

Key in one of the following:

Y = Prints the order

N = Does not print the order

If left blank, the system defaults to the value in the Print field in the TCAT.

---

33 **Text Type** *(optional, alphanumeric field; 2 positions)*

Key in the code associated with the standard text to be printed on the order. See the TXTP for valid codes.

---

34 **Conf Order** *(optional default, alpha field; 1 position)*

To confirm an order, key in ***Y*** (yes). If left blank, the system defaults to ***N***(no).

---

35 **BFYs** *(no-entry)*

Leave blank.

---

36 **Fund** *(no-entry)*

Leave blank.

---

37 **Doc Total** *(required, numeric field; max. of 15 positions)*

Key in the unsigned net amount of all accounting lines for the order.

---

38 **Ref Req** *(optional, alphanumeric field; max. of 13 positions)*

Key in the transaction code and document number of the referenced requisition. If left blank, the reference code and number must be entered on every applicable line of the order.

Header Fields *(cont'd)*

39 **Discount %** *(optional, numeric field; max. of 6 positions)*

Key in the percentage of discount (whole numbers or three decimal places) associated with the order. The discount applies to all lines.

40 **Discount Days** *(conditional, numeric field; max. of 2 positions)*

If Discount % (**Field 39**) was entered, key in the number of days the discount is applicable. Otherwise, leave blank.

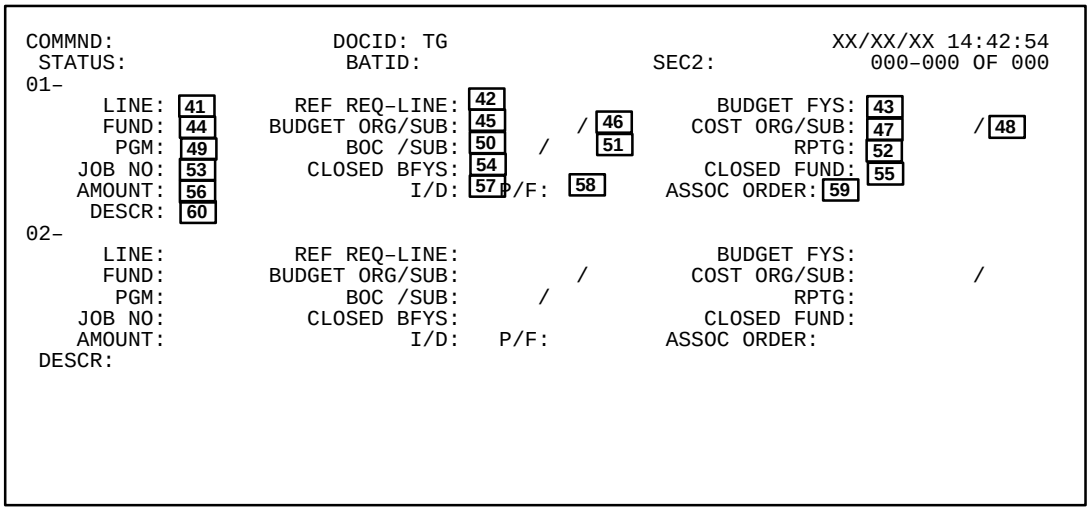

Figure 2. Training Order Document (TG) line fields

Line Fields

Complete the line fields as follows:

41 **Line** *(required, numeric field; 3 positions)*

Key in a number from ***001*** to ***999*** for the accounting line.

42 **Ref Req–Line** *(conditional, numeric field; max. of 13 positions)*

Key in the transaction code, document number, and reference line number of the referenced requisition.

43 **Budget FYs** *(no-entry)*

Leave blank. The budget fiscal year is derived from the DVAL.

44 **Fund** *(no-entry)*

Leave blank. The fund is derived from the DVAL.

45 **Budget Org** *(no-entry)*

This field is not used by RD.

46 **Budget Sub** *(no-entry)*

This field is not used by RD.

Line Fields *(cont'd)*

47 **Cost Org** *(no-entry)*

This field is not used by RD.

48 **Cost Sub** *(no-entry)*

This field is not used by RD.

49 **Pgm** *(required, alphanumeric field; max. of 9 positions)*

Key in the 9-position ACCS code, which resides in the program field. The existing field can only be modified if an order has not been placed against the line. See the PGMT for ACCS code verification.

50 **BOC** *(no-entry)*

Leave blank. The BOC is inferred from the referenced document.

51 **Sub BOC** *(no-entry)*

This field is not used by RD.

52 **Rptg** *(no-entry)*

Leave blank. The reporting category shows the 2-position special purpose code and is derived from the DVAL.

53 **Job No** *(no-entry)*

This field is not used by RD.

54 **Closed BFYs** *(no-entry)*

Leave blank.

55 **Closed Fund** *(no-entry)*

Leave blank.

56 **Amount** *(required, numeric field; max. of 15 positions)*

Key in the amount for the accounting distribution.

57 **I/D** *(optional default, alpha field; 1 position)*

Key in one of the following:

I = Indicates the amount entered is an increase
D = Indicates the amount entered is a decrease

If left blank, the system defaults to ***I***.

58 **P/F** *(conditional, alpha field; 1 position)*

If the Partial/Final Indicator Required flag in the TCAT is ***Y***, and a reference document is entered, key in one of the following:

P = Indicates a partial order
F = Indicates a final order

If left blank, the system defaults to ***P*** if this is a partial liquidation of the referenced document, or ***F*** if this is a full liquidation of the referenced document.

Line Fields *(cont'd)*

59 **Assoc Order** *(no-entry)*
This field is not used by RD.

60 **Descr** *(optional, alphanumeric field; max. of 31 positions)*
Key in a description of the line amount.

Processing Instructions

After keying in the data, press [Home] to place the cursor in the Command field. Key in ***E*** (edit) in the Command field to edit the data entered. Press [Enter]. If errors are detected, follow the Error Message Research Instructions. If no errors are detected, key in ***R*** (run) in the Command field to process the data. Press [Enter]. The status of the document is displayed.

Error Message Research Instructions

- Use the down arrow key to move to the error message and press [Enter]. The ERRG is displayed.
- Read the error explanation and follow any instructions provided.
- To return to the document, key in ***E*** in the Action field at any table screen.

Note: To override an error message, key in ***O*** in the Command field and press [Enter]

Note: For more detailed information on the TG, see **Part 4**, **Spending**, in the manual.